(15,482.)

SUPREME COURT OF THE UNITED STATES.

OCTOBER TERM, 1895.

No. 569.

ROBERT B. DASHIELL, APPELLANT,

vs.

JAMES B. M. GROSVENOR ET AL.

ON WRIT OF CERTIORARI TO THE UNITED STATES CIRCUIT COURT OF APPEALS FOR THE FOURTH CIRCUIT.

INDEX.

	Original.	Print.
Caption	*a*	1
Transcript from United States circuit court for the district of Maryland	1	1
Bill of complaint	1	1
Exhibit 1—Assignment from Samuel Seabury to Lavinia Wilson, May 1, 1890	6	5
2—Assignment from Lavinia Wilson to J. B. M. Grosvenor, May 1, 1890	8	7
3—Assignment from Samuel Seabury to Edward H. Litchfield, June 1, 1892	9	8
Subpœna	11	9
Marshal's return	12	10
Answer	13	10
Replication	25	17
Evidence on behalf of complainants	25	17
Testimony of Samuel Seabury	26	18
Albert R. Couden	36	26
Philip R. Alger	38	28
Abraham E. Culver	45	34
F. F. Fletcher	47	35

JUDD & DETWEILER, PRINTERS, WASHINGTON, D. C., OCTOBER 7, 1895.

	Original.	Print.
Testimony of Francis E. Green	56	43
Wm. Mayhew Folger	57	44
Samuel Seabury (recalled)	92	72
John W. Wilson	111	87
Samuel Seabury (recalled)	114	90
J. Wall Wilson (recalled)	129	102
Edward H. Litchfield	134	107
Henry F. Newbury	137	109
Raphael Netter	209	165
Evidence on behalf of defendant	211	166
Testimony of Edward T. Tippett	211	166
Willard G. Crawford	222	174
Edwin M. Birrell	224	175
Robert Brooke Dashiell	227	177
Wallace A. Bartlett	263	201
Philip T. Dodge	294	222
O. H. Worsey	308	231
Wm. I. Hough	311	233
Wm. F. Durfee	318	238
Wm. I. Hough (recalled)	339	252
Wm. F. Durfee (resumed)	340	253
Exhibit sketches referred to in testimony of Wm. F. Durfee	345	255
Evidence on behalf of complainants in rebuttal	347	256
Testimony of Harry F. Newbury	347	256
Complainants' exhibits	367	263
Letters patent No. 425,584, granted Samuel Seabury April 15, 1890	367	263
Letter No. 1—Letter from Wm. M. Folger to Samuel Seabury, September 29, 1890	371	269
Letter No. 2—Letter from Wm. Folger to Samuel Seabury, November 28, 1891	372	269
"Scientific American"—Article on Seabury breech mechanism for rapid-firing and other guns	373*a*	270
W. M. F. No. 1—Letter from Wm. M. Folger to Samuel Seabury, June 5, 1890	374	271
A[1]—Letter from Secretary of the Navy to Samuel Seabury, December 3, 1881	375	271
A[2]—Diagram	375*a*	271
A[3]—Diagram	375*a*	271
Enlarged drawing, figure 6, Sauvee patent	375*b*	271
Development drawing of Seabury sketches	375*c*	271
Defendant's exhibits	377	271
No. 1—Letter of Wilson & Wallis to Secretary of the Navy, March 10, 1892	377	271
No. 2—Letter of Samuel Seabury to Wilson & Wallace, March 9, 1892	384	275
R. B. D. No. 1—English patent No. 3402, granted Joseph Farcot April 5, 1887	391	280
No. 2—English patent No. 7434, granted Jean Baptiste Gustave Adolphe Canet February 12, 1889	395	282

	Original.	Print.
R. B. D. No. 3—English patent No. 14602, granted John Fielding August 10, 1889	401	287
No. 4—English patent No. 15188, granted Whinfield & Horne October 23, 1889	407	291
No. 5—English patent No. 7195, granted Thorsten Nordenfelt March 16, 1888	427	305
No. 6—English patent No. 7435, granted Jean Baptiste Gustave Adolphe Canet February 12, 1889	437	313
No. 7—English patent No. 9813, granted Albert Sauvée May 4, 1888	445	319
No. 8—English patent No. 9453, granted Albert Sauvée July 4, 1887	451	324
Letters patent No. 9943, granted John P. Schenkl, assignor, &c., August 16, 1853	462	330
Letters patent No. 26256, granted John Webster Cochran November 29, 1859	465	333
Letters patent No. 43110, granted William F. Goodwin June 14, 1864	469	337
Letters patent No. 360,798, granted William H. Driggs April 5, 1887	479	340
Letters patent No. 384,537, granted Thorsten Nordenfelt, assignor, &c., June 12, 1888	495	347
Letters patent No. 468,331, granted Robert Brooke Dashiell February 9, 1892	507	353
Opinion of Judge Morris	513	361
Decree	518	365
Injunction	520	367
Marshal's return	520	367
Petition for appeal	521	368
Order allowing appeal	522	369
Letter of Attorney General directing an appeal	522	369
Citation and acceptance of service	523	369
Petition to have original exhibits sent up on appeal, &c.	524	370
Order to have original exhibits sent up on appeal, &c.	524	370
Petition to have original exhibits sent up on appeal, &c.	525	371
Order to have original exhibits sent up on appeal, &c.	525	371
Petition to extend time to file record on appeal	525	371
Order extending time to file record on appeal	526	372
Stipulation as to record on appeal	526	372
Order to transmit record	527	372
Clerk's certificate	527	373
Docket entries	528	373
Opinion	529	373
Decree	539	380
Clerk's certificate	540	381
Writ of certiorari	541	381
Return to writ of certiorari	543	382
Stipulation as to return to writ of certiorari	546	382

a CERTIFIED COPY OF THE RECORD UNDER SUBDIVISION 3 OF RULE 37, SUPREME COURT RULES.

Transcript of Record.

In the United States Circuit Court of Appeals for the Fourth Circuit, October Term, 1894.

JAMES B. M. GROSVENOR, LAVINIA WILSON, EDWARD H. LITCHFIELD, and SAMUEL SEABURY, Appellees, *vs.* ROBERT B. DASHIELL, Appellant. } In Equity.

Appeal from the circuit court of the United States for the district of Maryland.

Record filed Octo. 20, 1894.

[Stamped:] Henry T. Meloney, clerk U. S. circuit court of appeals, Richmond, Va.

1 THE UNITED STATES OF AMERICA, *District of Maryland,* } *To wit:*

At a circuit court of the United States for the fourth circuit in and for the district of Maryland, begun and held at the court-house, in the city of Baltimore, on the first Monday of April, being the second day of the same month, in the year of our Lord one thousand eight hundred and ninety-four—present, the Honorable Thomas J. Morris, judge of the Maryland district; John T. Ensor, Esquire, attorney; William F. Airey, Esquire, marshal; James W. Chew, clerk—among other were the following proceedings, to wit:

JAMES B. M. GROSVENOR, LAVINIA WILSON, EDWARD H. LITCHFIELD, and SAMUEL SEABURY *vs.* ROBERT B. DASHIELL. } In Equity.

Bill of Complaint.

Filed July 25, 1892.

To the honorable judges of the circuit court of the United States for the district of Maryland:

James B. M. Grosvenor and Lavinia Wilson, of the city of New York, and citizens of the State of New York, Edward H. Litchfield, of the city of Brooklyn, and a citizen of the State of New York, and Samuel Seabury, of Bayonne, New Jersey, and a citizen of the State of New Jersey, bring this their bill of complaint against Robert B. Dashiell, of Glymont, Charles county, Maryland, and a citizen of the State of Maryland; and thereupon your orators complain and say—

That heretofore and before the 15th day of April, 1890, the above-named Samuel Seabury was the true, original and first inventor of a certain new and useful improvement in breech-loading cannon, not known or used by others prior to his invention thereof, and not in public use or on sale more than two years prior to his application for letters patent therefor.

2 That the said Samuel Seabury being, as aforesaid, the first and original inventor of said improvement, and being a citizen of the United States, made application to the Commissioner of Patents of the United States for letters patent therefor, in accordance with the then existing acts of Congress; having in all respects duly complied with the conditions and requisitions of said acts; and thereafter, upon the 15th day of April, 1890, letters patent of the United States, numbered 425,584, signed by the Secretary of the Interior, countersigned by the Commissioner of Patents and sealed with the seal of the Patent Office, all in the form of law for the said invention, were granted and issued to the said Samuel Seabury; whereby there was secured to the said Samuel Seabury, his heirs and assigns, for the term of seventeen years, from and after the 15th day of April, A. D. 1890, the full and exclusive right of making, using, vending and selling to others to use, or vend said invention throughout the United States and the territories thereof; which letters patent, or a duly certified copy thereof, your orators will produce as your honors may direct.

That afterwards, by certain assignments in writing, duly made and executed and recorded in the United States Patent Office, copies of which are hereto annexed, marked "Exhibits 1, 2 and 3," the said Samuel Seabury assigned and transferred certain undivided interests, less than the whole, in and to the said letters patent and rights secured thereby, unto the others of your orators, so that the whole, right, title, interest and ownership in and of said letters patent became and now is vested in your orators.

That your orators have invested and expended large sums of money in and about the development of the said invention so secured by the said letters patent, and in and about the introduction of the same into public use, and, but for the unlawful acts of the defendant hereunder complained of, would have been in undisturbed possession and enjoyment of the said invention, and of all rights thereunder, and would have realized large profits therefrom.

And your orators further complain and say that they have been informed and believe that the defendant, said Robert B. Dashiell, well knowing the premises and the rights secured to your orators, as aforesaid, has, since the first day of November, A. D. 1890, and before the commencement of this suit, wrongfully, unlawfully, and injuriously, with intent to derive profits therefrom and to deprive your orators of the profits and royalties which they might

3 and otherwise would have derived therefrom, and to that end conspiring, combining, and confederating with William M. Folger, hereinafter named, and with other persons unknown to your orators, infringed upon yours orators' rights under the said patent, by making and using, and by causing and procuring and authoriz-

ing others to make and use, a large number of breech-loading cannon, embodying the inventions described and claimed in and secured to your orators by said letters patent of the United States, numbered 425,584, without any authority or license from your orators, or any of them, and against the will of your orators, whereby said defendant has realized large profits, which in equity belong to your orators, and has caused your orators great and irreparable loss and injury.

That at the time of said infringement, and for some years prior thereto, the said defendant was an officer of the United States Navy, holding the rank of ensign therein, and was attached to the Bureau of Ordnance of the United States Navy, of which bureau Commodore William M. Folger, of the United States Navy, then was and still is the chief, and as such, stationed at and an inhabitant of said city of Washington, in the District of Columbia, having official charge, supervision, and control of the manufacture of cannon for the said navy at the navy yard in said city of Washington. That at the said time the said Samuel Seabury was a lieutenant in said United States Navy, but not detailed to or connected with said Bureau of Ordnance or said navy yard.

That shortly after the issue to said Samuel Seabury of the aforesaid patent, numbered 425,584, said Seabury exhibited a model and drawings of his said invention to the said William M. Folger at the office then occupied by him as chief of said Bureau of Ordnance in the building of the Navy Department in said city of Washington, for the purpose of procuring a trial and adoption of said invention by said bureau and said Navy Department. That, thereupon, said Folger promised to give said invention a trial, and requested said Seabury to prepare and furnish working drawings which would enable said Folger to construct for such trial a breech-loading cannon embodying said inventions; and such drawings were thereupon prepared by said Seabury and by him furnished to said Folger.

That subsequently the said defendant, making use of the information and drawings thus obtained from said Seabury by said Folger the same being furnished by said Folger to said defendant
4 for that express purpose, undertook to contrive and devise a design substantially the same as the improvement in breech-loading cannon to that so, as aforesaid, invented by and patented to said Seabury, and to evade the charge of infringement by changing the form of certain parts of said invention of said Seabury. And, in pursuance of this purpose, the said defendant did contrive such design and make drawings thereof, and furnished the same to the said Folger, who thereupon, with the consent and co-operation and aid of the said defendant, proceeded to construct and make trial of a breech-loading cannon in conformity with such design of the defendant, embodying substantially the said invention of said Seabury, but with some immaterial changes in the details of some of the parts, purposely designed by said defendant to evade the charge of infringement of the aforesaid patent, and designed to defraud said Seabury and his assigns of their rights in the premises; that the said defendant used the same, and also made trial and test of the same within the United States, and also within this district, and the

trial and test of the same having proved successful, by reason of the great merit of the said invention of said Seabury embodied therein, a large number of breech-loading cannon, embodying the said invention of said Seabury, were thereupon constructed at the said navy yard, under the consent and procurement of the said defendant and under his assumed authority as the pretended inventor of such design, as well as in pursuance of the aforesaid conspiracy, combination and confederacy of said Folger with the said defendant, and a large number of such breech-loading cannon are now in process of construction at said navy yard under such consent, procurement and assumed authority of the defendant, and in pursuance of such conspiracy, combination and confederacy, and in direct violation of the rights of your orators under the aforesaid patent.

That such infringement was conducted by said defendant and said Folger in a secret manner, and was by them and each of them intentionally kept from the knowledge of your orators until the early part of the year 1892, when it had reached such dimensions and extent that such concealment was no longer practicable.

That said acts of the defendant and of said Folger worked a great fraud and wrong upon your orators, and were by them designed and intended so to do.

And your orators further complain and say that they fear, and have reason to fear, that unless the said defendant said Robert B. Dashiell, is restrained by writ of injunction issued out of this court, he will continue to make and use, and to cause and procure and authorize others to make and use, breech-loading cannon, embodying the invention described and claimed in and secured to your orators by said letters patent, and thereby will cause irreparable injury to the rights of your orators in the premises.

In consideration whereof, and forasmuch as your orators can have no adequate relief except in this court, and to the end, therefore, that the said defendant may, if he can, show cause why your orators should not have the relief herein prayed, and may, upon his corporal oath, and according to his best and utmost knowledge, remembrance and belief, full, true and perfect answer make to all and singular the premises; and that said defendant Robert B. Dashiell may be compelled to account for and pay to your orators the income and profits thus unlawfully derived, and which may have been derived, from the violation of the rights of your orators as aforesaid, as well as the damages which your orators have sustained thereby, together with the costs and disbursements of this suit; and that both during the pendency of this suit, and perpetually, the said defendant, said Robert B. Dashiell, his clerks, servants, employees, agents, attorneys and all persons acting or assuming to act under his authority, and each and every of them, may be enjoined and restrained from making and using or causing and procuring, or permitting to be made and used, breech-loading cannon embodying the invention described and claimed in, and secured by, the said letters patent; that all such accountings and other proceedings may be had herein as may be necessary to the relief of your orators, and agreeable to the procedure of the court; and that your orators may

have such other and further relief in the premises as may be just and proper.

May it please your honors to grant unto your orators a writ of injunction, issuing out of and under the seal of this honorable court, enjoining and restraining the said defendant, his clerks, servants, employees, agents, attorneys and all persons acting or assuming to act under his authority, and each and every of them, as is hereinbefore in that behalf specifically prayed.

And may it please your honors to grant unto your orators a writ or writs of subpœna, directed to the said defendant, said Robert B. Dashiell, commanding said defendant, by a certain date
6 therein to be named, and under a certain penalty, to be and appear in this honorable court, then and there to answer all and singular the premises, and to stand to, perform and abide by *said* direction and decree as may be made against him.

And your orators in duty bound will ever pray, etc.

WILSON & WALLIS,
Complainants' Solicitors.

WM. A. JENNER, *Of Counsel.*

UNITED STATES OF AMERICA, *Southern District of New York*, } *ss:*

Samuel Seabury, being duly sworn, says that he is one of the complainants in the foregoing bill of complaint; that he has read the same and knows the contents thereof; that the same is true to his own knowledge, except as to the matters therein alleged upon information and belief, and as to those matters he believes it to be true.

SAMUEL SEABURY.

Sworn to before me this 18th day of July, 1892.

WM. E. ZABRISKIE,
[SEAL.] *Notary Public* (1), *N. Y. Co.*

EXHIBIT 1.

Received for record June 6, 1890, and recorded in Liber C 42, page 424, of transfers of patents.

In testimony whereof I have caused the seal of the Patent Office to be hereunto affixed.

C. E. MITCHELL,
[SEAL.] *Commissioner of Patents.*

Ex'd: F. C. T.

Assignment.

Whereas, Samuel Seabury, lieutenant United States Navy, at present residing at Bergen Point, in the county of Hudson and State of New Jersey, has obtained letters patent of the United States, No. 425,584, dated April 15, 1890, for improvement in breech-loading cannon.

And whereas, the said Samuel Seabury has also on the 31st
7 day of March, 1890, filed in the United States Patent Office
an application, serial No. 346,026, for an improvement in breech-loading cannon.

And whereas, the said Samuel Seabury has on the 15th day of April, 1890, filed or deposited in the government offices of the several foreign countries hereinafter mentioned applications for letters patent and other governmental protections, numbered and dated as follows:

April 15, 1890, Great Britain, application for patent, 6569.

April 15, 1890, France, application for brevet d'invention No. 191,873.

April 15, 1890, Belgium, application for brevet d'invention No. 67611.

April 15, 1890, Italy, application for privative No. 45.

April 15, 1890, Spain, application for patent of invention No. 1593.

April 15, 1890, Germany, application for patent No. 20219.

And whereas, Lavinia Wilson, of the city of New York, in the State of New York, is desirous of acquiring an interest in the patents and such other governmental and other protections as may be obtained for the aforesaid improvements in the several countries hereinabove mentioned.

Now therefore this indenture witnesseth that for and in consideration of the sum of one dollar, lawful money of the United States, to the said Samuel Seabury by the said Lavinia Wilson in hand paid, the receipt whereof by the said Samuel Seabury is hereby acknowledged, the said Samuel Seabury has bargained and sold, and does hereby assign, transfer and set over, unto the said Lavinia Wilson an undivided one-half of all right, title and interest in and to the said improvements in the said several countries, and in and to any letters patent or other governmental protections which may be obtained in said countries for said improvements; to have and to hold the same unto the said Lavinia Wilson, and unto her heirs, executors, administrators and assigns, to the full end of the terms for which such letters patent or other governmental protection may be granted, and of any extensions or prolongations of the terms of those protections.

And the said Samuel Seabury moreover covenants and agrees for himself, his heirs, executors, administrators and assigns; that he will, from time to time, and at all times hereafter, during the terms of such letters patent, or other governmental protections, or any prolongations of such terms, as may be reasonably required, by and at the sole cost and charge of the said Lavinia Wilson, her execu-
tors, administrators and assigns, make and execute all neces-
8 sary and proper deeds and writings for more effectually assigning and securing said interest in and to said improvements and such letters patent or other governmental protections, according to the true intent and meaning of these presents.

In witness whereof the said Samuel Seabury hereunto sets his hand and seal this 1st day of May, 1890.

(Signed) SAMUEL SEABURY. [SEAL.]

[SEAL.]

Witnesses:
D. IVINS.
HENRY C. BURDETT.

EXHIBIT 2.

Assignment.

Whereas, Lavinia Wilson, of the city and county and State of New York, is the owner of one undivided half interest in certain letters patent of the United States No. 425,584, dated April 15th, 1890, for improvement in breech-loading cannon, being the invention of Samuel Seabury, lieut., U. S. N.

And whereas, the said Lavinia Wilson has also a one undivided half interest in an application filed in the United States Patent Office, dated March 31, 1890, serial No. 346,026, for an improvement in breech-loading cannon.

And whereas, the said Lavinia Wilson is also the owner of one undivided half interest in the several foreign applications for letters patent and other governmental protections, numbered and dated as follows:

April 15, 1890, Great Britain, application for patent No. 6569.

April 15, 1890, France, application for brevet d'invention, No. 191,873.

April 15, 1890, Belgium, application for brevet d'invention, No. 67611.

April 15, 1890, Italy, application for privative No. 45.

April 15, 1890, Spain, application for patent of invention, No. 1593.

April 15, 1890, Germany, application for patent No. 20219.

And whereas, J. B. M. Grosvenor, of the city, State and county of New York, is desirous of acquiring an interest in the patents
9 and such other governmental and other protections as may be obtained for the aforesaid improvements in the several countries hereinabove mentioned.

Now, therefore, this indenture witnesseth: That for and in consideration of the sum of one dollar, lawful money of the United States, to the said Lavinia Wilson, by the said J. B. M. Grosvenor, in hand paid, the receipt whereof by the said Lavinia Wilson is hereby acknowledged, the said Lavinia Wilson has bargained and sold, and does hereby assign, transfer and set over unto the said J. B. M. Grosvenor an undivided one-half of all her right, title and interest (being one-quarter (¼) of the whole patent) in and to the said improvements in the said several countries, and in and to any letters patent or other governmental protections which may be granted in said countries for said improvements, to have and to hold

the same unto the said J. B. M. Grosvenor, and unto his heirs, executors, administrators and assigns, to the full end of the terms for which such letters patent or other governmental protection may be granted, and of any extensions or prolongations of the terms of these protections.

And the said Lavinia Wilson moreover covenants and agrees for herself, her heirs, executors, administrators and assigns, that she will from time to time and at all times hereafter during the terms of such letters patent or other governmental protections or any prolongations of such terms, as may be reasonably required, make and execute all necessary and proper deeds and writings for more effectually assigning and securing said one-quarter interest in and to said improvements and such letters patent or other governmental protections according to the true intent and meaning of these presents.

In witness whereof the said Lavinia Wilson has caused her name and seal to be attached by her lawfully appointed attorney this 1st day of May, 1890.

LAVINIA WILSON, [SEAL.]
By J. WALL WILSON, *Attorney.*

Witnesses:
D. IVINS.
HENRY C. BURDETT.

EXHIBIT 3.

Assignment.

Whereas, Samuel Seabury, lieutenant United States Navy, at present residing at Bergen Point, in the county of Hudson and State of New Jersey, has obtained letters patent of the United States No. 425,584, dated April 15, 1890, for improvements in breech-loading cannon.

And whereas the said Samuel Seabury has also on the 31st day of March, 1890, filed in the United States Patent Office an application serial No. 346,026 for an improvement in breech-loading cannon.

And whereas, the said Samuel Seabury has on the 15th day of April, 1890, filed or deposited in the government offices of the several foreign countries hereinafter mentioned, applications for letters patent and other governmental protections numbered and dated as follows:

April 15, 1890, Great Britain, application for patent No. 6569.

April 15, 1890, France, application for brevet d'invention No. 191,873.

April 15, 1890, Belgium, application for brevet d'invention No. 67611.

April 15, 1890, Italy, application for privative No. 45.

April 15, 1890, Spain, application for patent of invention No. 1593.

April 15, 1890, Germany, application for patent No. 20219.

And whereas, Edward H. Litchfield of the city of Brooklyn, in the State of New York, is desirous of acquiring an interest in the patents and such other governmental and other protections as may be obtained for the aforesaid improvements in the several countries hereinabove mentioned.

Now therefore, this indenture witnesseth, that for and in consideration of the sum of one dollar, lawful money of the United States, to the said Samuel Seabury by the said Edward H. Litchfield in hand paid, the receipt whereof by the said Samuel Seabury is hereby acknowledged, the said Samuel Seabury has bargained and sold, and does hereby assign, transfer and set over, unto the said Edward H. Litchfield an undivided one-sixth of all my right, title and interest in and to the said improvements in the said several countries, and in and to any letters patent or other governmental protections which may be obtained in said countries for said improvements, being one-twelfth of the whole; to have and to hold the same unto the said Edward H. Litchfield, and unto his heirs, executors, administrators and assigns, to the full end of the terms for which such letters patent or other governmental pro-
11 tection may be granted, and of any extensions or prolongations of the terms of those protections.

And the said Samuel Seabury moreover covenants and agrees for himself, his heirs, executors, administrators and assigns, that he will, from time to time and at all times hereafter during the terms of such letters patent or other governmental protections or any prolongations of such terms, as may be reasonably required by and at the sole cost and charge of the said Edward H. Litchfield, his executors, administrators and assigns, make and execute all necessary and proper deeds and writings for more effectually assigning and securing said interest in and to said improvements and such letters patents or other government- protections according to the true intent and meaning of these presents.

In witness whereof, the said Samuel Seabury hereunto sets his hand and seal this first day of June, 1892.

SAMUEL SEABURY. [SEAL.]

Witness: The letter "h" in the word "sixth" written over an erasure and the word "my" interlined in the 11th line of 2d page, and the words "being one-twelfth of the whole" interlined in the 15th line of second page, all before execution.

HAMILTON WALLIS.
WM. E. ZABRISKIE.

Replication.

Formal replication to the defendant's answer was filed October 6th, 1892.

Subpœna.

THE UNITED STATES OF AMERICA, *District of Maryland,* } *To wit:*

To Robert B. Dashiell, of Glymont, Charles county, Maryland, Greeting:

You are hereby commanded that, all excuses and delays [SEAL.] set aside, you be and appear at the clerk's office of the circuit court of the United States for the fourth circuit in and for the district of Maryland, on the first Monday in September next, to answer unto the bill of complaint of James B. M. Grosvenor, Lavinia Wilson, Edward H. Litchfield, and Samuel Seabury
12 in said court exhibited against you. Hereof you are to fail not at your peril, and have you then and there this writ.

Witness the Honorable Melville W. Fuller, Chief Justice of our Supreme Court, the twenty-fifth day of July, in the year of our Lord, 1892.

Issued 25th day of July, 1892.

JAS. W. CHEW, *Clerk.*

MEMORANDUM.—The defendant is required to enter his appearance in the suit in the clerk's office on or before the first Monday of September next; otherwise the bill may be taken *pro confesso.*

Marshal's Return.

"Summoned Robert B. Dashiell July 26, 1892, 1 p. m., and copy — subpœna left.

WM. F. AIREY,
U. S. Marshal."

13 In the Circuit Court of the United States, District of Maryland. In Equity.

JAMES B. M. GROSVENOR, LAVINIA WILSON, EDWARD H. LITCHFIELD, and SAMUEL SEABURY, Complainants,
against
ROBERT B. DASHIELL, Defendant.

The answer of Robert B. Dashiell, defendant, to the bill of complaint of James B. M. Grosvenor, Lavinia Wilson, Edward H. Litchfield, and Samuel Seabury, the complainants herein.

This defendant, now and all times hereafter, saving and reserving unto himself all benefit and advantage of exception which can or may be had or taken to the manifold errors, uncertainties, imperfections and insufficiencies in the said complainants' said bill of complaint contained, for answer thereto, or to so much and such parts thereof as this defendant is advised is material or necessary for him to make answer to, this defendant answering, says:

1. The defendant is informed and believes, and, therefore, admits, that the Samuel Seabury named in the bill of complaint made application to the Commissioner of Patents of the United States
14 for letters patent for an alleged new and useful improvement in breech-loading cannon, and that subsequently upon the 15th day of April, 1890, letters patent of the United States, numbered 425,584, were issued to the said Samuel Seabury. But this defendant, on information and belief, denies, in the manner more explicitly hereinafter set forth, that the said Samuel Seabury was the true, original and first inventor of the alleged improvement set forth in said letters patent, and that the said alleged improvement was not known or used in this country prior to his invention thereof, and that it was not in public use or on sale for more than two years prior to his application for letters patent; and this defendant has no knowledge as to whether or not the conditions and requisitions of the acts of Congress were complied with in the grant of said letters patent, and leaves the complainant to make such proof thereof as he may be advised; but on information and belief this defendant denies that by said letters patent any exclusive rights whatever were secured to the said Samuel Seabury, as in said bill alleged.

2. The defendant does not know, and is not informed, save by said bill of complaint, whether or not the said Samuel Seabury assigned and transferred certain undivided interests less than the whole, in and to the said letters patent and rights secured thereby, to the others of the said complainants, or whether such assignments were recorded in the Patent Office, and leaves the complainants to make such proof thereof as they shall be advised is material; but on information and belief the defendant denies that the complainants have any sole and exclusive rights under said letters patent to make, use and sell the invention therein shown and described.

3. The defendant denies that he has done any of the acts alleged in the bill of complaint, and therein complained of as an infringement of the said letters patent, and more specially he denies
15 the allegations of the bill of complaint that the defendant has, since the first day of November, 1890, and before the commencement of this suit, wrongfully, unlawfully, and injuriously, with intent to derive profits therefrom and to deprive the said complainants of profits and royalties which they might and otherwise would have derived therefrom, and to that end conspiring, combining and confederating with William M. Folger and other persons, infringed upon the said complainants' rights under the said patent by making and using, and causing and procuring and authorizing others to make and use a large number of breech-loading cannon embodying the inventions described and claimed in and secured to the complainants by said letters patent of the United States, numbered 425,584, without any authority or license from the complainants. And the defendant also specifically denies that he has done any of the acts alleged in the bill of complaint and therein complained of as a conspiracy, combination, and confederacy of William M. Folger with this defendant, and more specifically he denies the allegations of the bill of complaint that, making use of informa-

tion or drawings obtained from said Seabury by said Folger, he, the defendant, undertook to contrive and devise a design substantially the same as the improvements in breech-loading cannon invented and patented to the said Seabury; that he undertook to evade the charge of infringement by changing the form of certain parts of said invention of said Seabury; that in pursuance of this purpose he, the said defendant, did contrive such design, and make drawings thereof and furnish the same to the said Folger; that the said Folger did, with his consent, co-operation and aid, proceed to construct and make trial of breech-loading cannon in conformity with such design of this defendant, embodying substantially the invention of the said Seabury, but with some immaterial changes in the details, purposely designed by this defendant to evade the charge of infringement of the aforesaid patent, and designed to defraud the said Seabury and his assigns of their rights in the premises; that he, the defendant, used the same, and also made trial and test of the
16 same within the United States and also within this district; that such trial or test of the same proved successful by reason of the great merit of the said invention of Seabury embodied therein; that a large number of breech-loading cannon embodying the said invention of said Seabury were constructed at the said navy yard under his consent, procurement and authority, as well as in pursuance of the alleged conspiracy, combination and confederacy of said Folger with this defendant; that a large number, or any number of breech-loading cannon, are now in process of construction at said navy yard under such consent, procurement and assumed authority of this defendant, in pursuance of such alleged conspiracy and confederacy, in direct violation of the rights of the complainants under the aforesaid patent; that such alleged infringement or any infringement was conducted by this defendant and the said Folger in a secret manner, and that any improvement described and claimed in said letters patent was by this defendant, or by this defendant and the said Folger, intentionally kept from the knowledge of the complainants until the early part of 1892, or at any other time.

4. The defendant denies that he has realized large profits or any profits whatever which in equity belong to the said complainants, or that he has caused the complainants great and irreparable loss and injury.

5. The defendant admits that before and after the first day of November, 1890, and before the commencement of this suit, he was an officer of the United States Navy, holding the rank of ensign therein, and that between June 20, 1890, and September 1, 1890, he was attached to the Bureau of Ordnance of the United States Navy, of which bureau Commodore William M. Folger, of the United States Navy, then was, and still is, the chief; and this defendant states that he has been informed, and believes it to be true, that the said Folger at and since the said time was stationed at and an in-
17 habitant of the city of Washington, in the District of Columbia, and had official charge, supervision and control of the manufacture of cannon for the said navy at the navy yard in said

city of Washington, and that said Samuel Seabury was at the said time a lieutenant in the United States Navy, but was not detailed to or connected with said Bureau of Ordnance or said navy yard.

6. This defendant denies that at the time of the said alleged infringement, and for some years prior thereto, he was attached to the Bureau of Ordnance of the United States Navy.

7. This defendant further avers that while he was on duty at the proving ground at Annapolis, during the summer and fall of 1889, he was engaged in testing rapid-fire guns of small calibre of the types then designed, and heard that it had been proposed to manufacture larger guns of these types, and to adopt these enlarged guns in the naval service; that the mechanical features of these guns did not appear to him satisfactory, and after much thought upon the subject, the quick-acting interrupted screw seemed to him to be the only solution of the problem of rapid-fire guns of large calibre.

8. That on or about December, 1889, he saw the said Folger in Washington, D. C., and told him he had started on the work of designing a rapid-fire gun, in which the breech closure was to be on the slotted-screw system, with improved means for increasing the rapidity of opening and closing the same; that his plans and drawings for a model were completed on or about April 1, 1890, but that lack of funds, press of routine duties, and the completion of designs for breech-loading turret guns of heavy calibre, and for the recoil velocimeter prevented him from getting the working model ready until some time afterward; that he was detached from the
18 duty at Annapolis on June 20, 1890, and ordered to the Bureau of Ordnance to design the new proving ground at Indian Head, in the State of Maryland, and superintend contracts and other matters in connection with that station; that on September 1, 1890, he was placed in command of the proving ground, and left Washington, D. C., for the station at Indian Head, and has been on duty there in charge of the naval-ordnance proving ground ever since; that his official duties since the summer of 1889 have had nothing to do with the manufacture or sale of guns, but that he has been ordered by his superior officers to test them as to structural weakness, facility of operation, rapidity and precision of fire, and such other purposes as are necessary to test their efficiency and safety, and has obeyed such orders as in duty bound; and that all acts performed by him prior to the commencement of the suit relating to the manufacture or use of guns have been performed under the orders of the chief of the Bureau of Ordnance of the Navy Department, who has direct supervision and control of such matters.

9. That in August, 1890, he showed a model of his invention to the said Folger, and was asked by him to prepare working drawings for a four-inch rapid-fire gun in accordance with his design, which drawings were prepared and sent to the Bureau of Ordnance early in September, 1890. That about the middle of December, 1890, the said Seabury wrote to him, asking for a drawing of his improvement, but that he declined to give it, for the reason that his patent had not been granted, and he was informed and believed

that it was not the practice of the Bureau of Ordnance to disclose its plans of development.

The defendant admits that a number of breech-loading cannon have been constructed at the navy yard at Washington, embodying the invention described and claimed in the said letters patent No. 468,331, granted to him on the 9th day of February, 1892, and that such breech-loading cannon embodying his invention have been tried and tested within this district, but he avers that such breech-loading cannon were manufactured under the orders, instruc-
19 tions, supervision and authority of the said Folger and officers attached to the said navy yard.

10. And the defendant further avers that he has never seen or had explained to him the drawings alleged in said bill of complaint to have been furnished to the said Folger by the said Seabury; that on November 4, 1890, he made application for letters patent of the United States for certain new and useful improvements in breech-loading ordnance, and that letters patent No. 468,331, dated February 9, 1892, were granted to him thereon, and that prior to said November 4, 1890, he had not been informed that the said Samuel Seabury had exhibited a model of his invention to the said William M. Folger or to any one else, or that the said Folger had promised to give any invention of the said Samuel Seabury a trial, or that the said Folger had requested the said Seabury to furnish working drawings of the invention.

11. And the defendant further denies that any act or acts by him performed have worked a fraud or wrong upon the complainants or were intended by him so to do.

12. And the defendant further denies that he intends or expects to use or to cause and procure, and authorize others to make and use breech-loading cannon embodying the invention described and claimed and secured to the complainants by said letters patent, or any apparatus, machines or devices, or combined machines and devices substantially described or claimed in the said letters patent.

13. The defendant further avers, on information and belief, that the said letters patent are void and of no effect in law, because the said Samuel Seabury was not the original inventor or discoverer of the alleged invention or improvement set forth in the said letters patent, but that the said alleged improvement, or material and substantial parts thereof, was before any invention thereof by
20 said Seabury, patented in the following specified letters patent of the United States, to wit:

Letters patent No. 373,598, granted to C. H. Murray, November 22, 1887.

Also the following-named letters patent of France, to wit:

Letters patent No. 184,079 of June 7, 1887, to J. B. G. A. Canet, and the certificate of addition attached thereto June 4, 1888.

Letters patent No. 180,578 of May 10, 1887, to J. B. G. A. Canet.

Also the following-named letters patent of the Kingdom of Great Britain, to wit:

Letters patent No. 9453 of July 4, 1887, to J. B. G. A. Canet.

Letters patent No. 205 of January 6, 1885, to C. H. Murray.

Also the following letters patent of the Kingdom of Italy, to wit: Letters patent No. 18018 of March 31, 1885, to C. H. Murray, and also in various other letters patent of the United States, Great Britain, France and other countries not now known to this defendant, but which when found the defendant prays leave to make a part of this answer by proper amendment and averment.

14. The defendant further avers on information and belief that the said letters patent, and each and every part thereof, are void and of no effect in law because the alleged invention described therein was prior to any invention thereof by the said Samuel Seabury, alleged in the bill of complaint aforesaid, described in printed publications as follows, to wit:

21 Engineering, published in London, as follows:
January 31, 1890, pages 109, 110, 111.
February 7, 1890, pages 134, 135, 136, 137, 138.
February 14, 1890, pages 157, 158, 159.
February 21, 1890, pages 185, 186, 187, 188.
Revue d'Artillerie, published in Paris, France, October, 1889, pages 52 to 62.
Genie Civil, published in Paris, France, May 11, 1889, and also in various other printed publications not now known to this defendant, but which when found the defendant prays leave to make part of this answer by proper amendment and averment.

15. The defendant, on information and belief, avers that said letters patent are void and of no effect in law because the said Samuel Seabury obtained the said letters patent for that which was in fact invented by another who was using reasonable diligence in adapting and perfecting the same.

16. And this defendant further avers on information and belief, that the said letters patent are void and of no effect in law, because the said Samuel Seabury obtained said letters patent for that which was in fact invented by Jean Baptiste Gustave Adolphe Canet, of Paris, France, who was using reasonable diligence in adapting and perfecting the same.

17. And this defendant further avers on information and belief, that the said Canet, on February 7, 1889, made application for letters patent of the United States for certain new and useful improvements in breech-loading ordnance, and that letters patent of the United States No. 447,228 were granted to him thereon on February 24, 1891; and this defendant avers on information and belief, that the invention or improvement set forth in said letters patent

22 No. 425,584, or material and substantial parts thereof, was patented in and by the said letters patent granted to the said Canet on February 24, 1891.

18. And the defendant further avers on information and belief, that the said Canet on April 23, 1889, made application for letters patent of the United States for certain new and useful improvements in breech-loading ordnance, and that letters patent of the United States No. 430,102 were granted to him thereon on June 10, 1890; and this defendant avers on information and belief, that the invention or improvement set forth in said letters patent No. 425,584,

or material and substantial parts thereof, was patented in and by the said letters patent granted to the said Canet on June 10, 1890.

19. The defendant further avers, on information and belief, that the said alleged invention or discovery purporting to be covered by said letters patent No. 425,584, or material and substantial parts thereof, had been in public use or on sale in the United States for more than two years before the filing of the application on which said letters patent were granted.

20. The defendant further avers, on information and belief, that in view of the state of the art to which the alleged invention embraced in said letters patent No. 425,584 belongs, or with which it is most nearly connected, there was no invention in anything done by the said Samuel Seabury as embraced in said letters patent.

21. And this defendant denies all and all manner of unlawful combination and confederacy wherewith he is by the said bill charged, without this, that there is any other matter, cause or thing in the said complainants' said bill of complaint contained, material or necessary for this defendant to make answer unto and not herein and hereby well and sufficiently answered, confessed, traversed and avoided or denied, is not true to the knowledge or belief of this defendant, all of which matters and things this defendant is ready and willing to aver, maintain and prove as this honorable court shall direct, and humbly prays to be hence dismissed with his reasonable costs and charges in this behalf most wrongfully sustained.

23 & 24

(Signed) ROBERT B. DASHIELL.

DISTRICT OF COLUMBIA, *ss*:

Robert B. Dashiell being duly sworn, deposes and says that he is the defendant named in the foregoing answer subscribed by him; that he has read the same and knows the contents thereof, and that the same is true of his own knowledge, except as to matters therein stated on information and belief, and as to those matters he verily believes it to be true.

Subscribed and sworn to before me this 26th day of September, 1892.

(Signed) EDW. A. MOSELEY,
Notary Public.

25 *Replication.*

Filed October 6, 1892.

Circuit Court of the United States for the District of Maryland.
In Equity.

JAMES B. M. GROSVENOR and Others
against
ROBERT B. DASHIELL.

The replication of James B. M. Grosvenor, Lavinia Wilson, Edward H. Litchfield, and Samuel Seabury, complainants, to the answer of Robert B. Dashiell, defendant.

These repliants, saving and reserving unto themselves all and all manner of advantage of exception to the manifold insufficiencies of the said answer, for replication thereunto say that they will aver and prove their said bill to be true, certain, and sufficient in the law to be answered unto, and that the said answer of the defendant is uncertain, untrue, and insufficient to be replied to by these repliants; without this, that any other matter or thing whatsoever in the said answer contained material or effectual in the law to be replied unto, confessed and avoided, traversed and denied, is true; all which matters and things these repliants are and will be ready to aver and prove as this honorable court shall direct, and humbly pray as in and by their said bill they have already prayed.

WILSON & WALLIS,
Solicitors for Complainants.

WM. S. JENNER, *Of Counsel.*

Testimony on Behalf of Complainants.

Adjournment.

Circuit Court of the United States for the District of Maryland.
In Equity.

JAMES B. M. GROSVENOR, LAVINIA WILSON, SAMUEL SEABURY, and EDWARD H. LITCHFIELD
against
ROBERT B. DASHIELL.

Before Samuel A. Blatchford, Esq., commissioner.

Deposition of witness, taken *de bene esse* and produced, sworn, and examined on behalf of the complainants, before Samuel A.
26 Blatchford, a commissioner of the circuit court of the United States for the southern district of New York, at his office, No. 16 Exchange place, in the city of New York, on the 18th day of October, 1892, under and pursuant to the annexed notice

and the provisions of sections 863 *et-seq.* of the Revised Statutes of the United States, upon the ground that the witness to be examined lives at a greater distance from the place of trial of this cause than one hundred miles.

16 EXCHANGE PLACE,
NEW YORK CITY, *October* 13, 1892—11 a. m.

On application of counsel for complainants the taking of the depositions of witnesses for the complainants is adjourned to October 18, 1892, at 11 a. m.

16 EXCHANGE PLACE,
NEW YORK CITY, *October* 18, 1892—11 a. m.

Present: Samuel A. Blatchford, Esq., the commissioner, also Mr. William G. Wilson, of counsel for the complainants, and Mr. S. F. Phillips, of counsel for the defendant.

Counsel for complainants produces and files with the commissioner and offers in evidence notice of taking testimony on behalf of the complainants with proof of due service thereof on the solicitor for the defendant.

Said notice and proof of service annexed are marked "Complainants' Exhibit Notice of Taking Testimony, S. A. B., commissioner."

It is hereby consented that the testimony in the above case under the notice given by the solicitors for the complainant for the taking of testimony in New York before Samuel A. Blatchford, may be taken down in the presence of said Samuel A. Blatchford by a stenographer and afterwards typewritten and subscribed by the witness.

SAMUEL SEABURY, called on behalf of the complainants, and being duly sworn, testifies as follows:

Direct examination by Mr. WILSON:

1 Q. You are one of the complainants in this cause, I believe?
A. I am.
2 Q. What is your age?
A. Forty-two.
27 3 Q. What is your residence?
A. Bayonne, New Jersey.
4 Q. Your occupation is what?
A. Lieutenant, United States naval officer; at present on furlough.
5 Q. How long have you been an officer of the navy?
A. I graduated at the United States Naval Academy in 1871.
6 Q. You have been continuously in service?
A. Ever since until the middle of April last when I was granted a furlough.
7 Q. Have you given any special attention to ordnance matters in the course of your experience?
A. Yes; ordnance has always been an interesting study to me, and in an unofficial way—a disconnected way—I have followed it

for many years. I first attacked the breech-loading mechanism for guns about 1876.

8 Q. Since that time have you given thought and study to the subject?

A. Yes, very much, disconnectedly.

9 Q. During considerable of that time you were engaged in duties at sea?

A. At sea and on shore both, dividing the duties between sea and shore.

10 Q. Did you finally devise a breech-loading mechanism yourself and apply for a patent thereon?

A. Yes; I devised a breech-loading mechanism involving an interrupted screw-block.

11 Q. And for that invention did you apply to the United States Patent Office for a patent?

A. I applied for a patent about July, 1889; as I recollect, it was the 19th it was filed.

12 Q. Was a patent subsequently granted on that application?

A. A patent was allowed upon this application in October, 1889; it was allowed in October, 1889, and allowed to run its six months before issue, which occurred on the 15th of April, 1890.

13 Q. Is this the patent you refer to?

A. Yes; No. 425,584.

Counsel for complainants offers a certified copy of the patent in evidence.

It is marked "Complainants' Exhibit Letters Patent No. 425,584."

28 14 Q. Did you subsequently assign any interest in this patent to another person?

A. I did.

15 Q. To whom?

A. I assigned one-half interest to Lavinia Wilson, of New York city.

16 Q. Did she assign any part of that?

A. She assigned, as I understood, one-half of her interest to Mr. J. B. M. Grosvenor. I also assigned one-sixth of my remaining interest, or one-twelfth of the whole, to Mr. Edward H. Litchfield, of Brooklyn.

17 Q. After obtaining this patent, what steps, if any, did you take with the view to the working of the patent in this country?

A. After the patent was allowed, a working model was constructed—a model made one-half scale of the navy four-inch gun—and with this model I went to Washington in the early part of May, 1890, after the issue of the patent, accompanied by Captain J. Wall Wilson, of New York, and together we visited the Bureau of Ordnance of the navy and placed the model, together with a set of then unfinished drawings, of a modification of the mechanism, before Commodore Folger, chief of the Bureau of Ordnance.

18 Q. You have those drawings now with you?

A. I have, yes.

19 Q. Please state what conversation occurred between you and Commodore Folger on that occasion?

A. Commodore Folger expressed himself as much interested in the model, seated himself at a table before it, opened and closed it a great many times and said, as if speaking to himself: "Yes; this is a very good thing—in many respects superior to anything we have," and then after still further examination he arose abruptly from his chair and said, "Well, what will you charge us for this?" Captain Wilson asked him if he meant a lump sum. He replied, "No, the Government does not do business that way, I mean a royalty." We explained to him that his question was rather sudden—that we were not prepared to answer it. Whereupon he told us to talk it over together and let him know what we would agree to take. Captain Wilson and I concluded that——

20 Q. State what you said.

A. We agreed to take the amount the department had agreed to pay the Driggs-Schroeder Company for the use of their block or their system. Commodore Folger thought that this sum was
29 about $250 per gun, and verified his belief by the books of the bureau, which were brought by Ensign Alger, now professor.

21 Q. Did the $250 apply to all sizes or to one particular size?

A. No; we intended it to apply to the four-inch gun, which was the understanding we had with him.

22 Q. Do you mean a larger sum for a larger size?

A. That was our understanding.

23 Q. Was that talked of?

A. We mentioned *pro rata* for larger guns, but nothing definite.

23½ Q. But $250 for the four-inch was understood as the basis?

A. That was our understanding.

24 Q. What further took place?

A. Commodore Folger then said in his own words, "Our fences are all up and in good condition; we have a good mechanism now—the Driggs-Schroeder, which will be tried shortly. I will hold this mechanism as an alternate for trial in case of the failure of the Driggs-Schroeder."

25 Q. Did that refer to any particular size of the Driggs-Schroeder—was it mentioned in the conversation?

A. It referred to the four-inch Driggs-Schroeder which was then being prepared at the Washington yard for trial.

26 Q. Was there further conversation?

A. Yes; the conversation afterwards turned upon a new gas check which I wished to submit, and in which Commodore Folger seemed to take a good deal of interest, saying that, in a measure, he considered himself the inventor of this check. Before we left the office we made another effort toward getting the mechanism for the four-inch gun tried without waiting for the Driggs-Schroeder, and finally Commodore Folger said to us, "Well, I will tell you what I will do—I will try this mechanism anyway," pointing to the drawing of the four-inch gun—these are the very tracings that were unfinished at the time.

27 Q. These are the very tracings?

A. Yes; unfinished at the time. "Complete these drawings and send me blue prints of them," and then he turned to the drawing of the gas check saying, "There is no reason why we should not try this at once; make me drawings embodying the six-inch gun with your mechanism, &c., and send them on."

28 Q. Which of these are the drawings or are they all the drawings which you presented to Commodore Folger at the time mentioned (showing the witness some papers)?

A. These sheets were unfinished, marked 1 and 2.

29 Q. To what extent were these sheets 1 and 2 then finished?

A. Their outlines were finished, but there was no shading and some of the minor points of firing gear and trigger were not located—this pawl was afterwards placed in.

30 Q. Were the essential features of the mechanism as you understood them clearly shown by the drawing?

A. The essential features were fully set forth in the drawing.

31 Q. That is, the method for rotating the screw-block, the method of withdrawing the block from the breech into the tray, and the method for swinging the block so withdrawn on the tray out of the way of the breech of the gun?

A. That is correct.

Counsel for complainants offers these drawings in evidence.

They are marked "Complainants' Exhibits Drawings 1 and 2," respectively.

32 Q. After the interview which you have narrated did you return to New York?

A. I did at once.

33 Q. Were you then stationed at New York?

A. I was attached to the U. S. naval board of inspection of merchant vessels, room 37, post-office, New York.

34 Q. After you returned to New York did you take any steps in the direction suggested by your conversation with Commodore Folger?

A. Yes; at as early date as practicable I finished the drawing of the four-inch gun.

35 Q. This drawing here?

A. Yes.

36 Q. The two marked in evidence and the third sheet which is marked "3"?

A. The same. And these drawings, or blue prints of these drawings, I submitted to Commodore Folger about June 3, 1890, and received his acknowledgment.

37 Q. A blue print is practically a full-sized photograph, is it not?

A. It is a reproduction of about the same size; it shrinks somewhat—that is the only difference; it is printed from the drawing by the action of the sun on sensitive paper.

Counsel for complainants offers sheet 3 also in evidence. It is marked "Complainants' Exhibit Drawing, Sheet 3."

38 Q. Did you, after that, make further drawings?

A. After submitting the four-inch drawing I immediately took up the design for the six-inch gun, which included a gas check, and which drawing had been requested by Commodore Folger.

39 Q. Such drawings as were indicated by him in that conversation?

A. Yes.

40 Q. When did you complete these?

A. Those drawings were completed on the 3d of July, 1890.

41 Q. Did you finish those also?

A. Yes; and they were mailed to the bureau on the 5th.

42 Q. Addressed to Commodore Folger?

A. Addressed to Commodore Folger. I received no acknowledgment of these drawings, and after ten days, about, I wrote to the chief clerk of the Bureau of Ordnance and asked him if the drawings had been received, as I was anxious about them. He replied that they had been received and were under consideration. I heard nothing further in regard to them, so on about September 28, 1890, I wrote to Commodore Folger concerning these drawings and received a reply——

43 Q. Is that the reply which you received (showing a letter to witness)?

A. That is it.

Counsel for complainants offers the letter in evidence. It is marked "Complainants' Letter No. 1."

44 Q. This letter contains the expression, "The bureau has other designs developed by its assistants, which it considers superior in some respects;" that is, superior to yours; was there anything in your conversation with Commodore Folger which enabled you to understand what design that referred to?

A. Nothing; the only mechanism which he referred to was the Driggs-Schroeder.

45 Q. Then, in that conversation he had mentioned no designs of the bureau itself or designs developed by assistants of the bureau?

A. Nothing at all.

32 46 Q. Were those blue prints of the four-inch and six-inch which you sent to Commodore Folger ever returned to you?

A. They were not. To the best of my knowledge, they are on file at the Bureau of Ordnance.

47 Q. When first did you hear of any mechanism called by the name of the defendant Dashiell?

A. I first heard the name in connection with the gun mechanism on reading Commodore Folger's report of the Bureau of Ordnance for 1890—I think that is the date—for the current year, the year that had passed.

48 Q. When did you first see any of the defendant Dashiell's mechanism?

A. I first saw it—actually, or drawing?

49 Q. The mechanism itself?

A. The mechanism itself, in the early part of February, 1892.

50 Q. Where did you see it?

A. At the ordnance shops at the Washington navy yard.

51 Q. Were you alone or accompanied by some one?

A. Accompanied by Captain Wilson, before referred to, of New York.

52 Q. Did you inquire for the Dashiell mechanism at that place?

A. Yes.

53 Q. Of whom?

A. Officers of the yard who were accompanying us about the shops.

54 Q. Having official connection with the yard?

A. Yes; having official connection with the yard.

55 Q. What did you see there—did you see the finished gun?

A. A number of guns of various stages of completion and mechanisms, the parts of which were stored in a room—these mechanisms were intended apparently for four-inch and five-inch guns. I afterwards, on the same day, saw the mechanism attached to the six-inch gun—it was the mechanism, that is, the major part of it, as it had the De Bange check; the minor parts, such as the firing pin, trigger, &c., were omitted. I worked this mechanism several times, opening and closing.

56 Q. Did you examine it sufficiently to recognize it again?

A. I did.

33 57 Q. And was Captain Wilson present with you at that time?

A. He was.

58 Q. I show you four drawings, and ask you whether the Dashiell mechanism, which you saw on the occasion you last mentioned, was or was not substantially like that which these drawings portray?

A. Substantially like that? It was.

Counsel for complainants asks to have these marked for identification.

They are marked "drawings A, B, C, and D for identification."

59 Q. At the time you saw this Dashiell mechanism at the Washington navy yard, had you ever been able to procure drawings of the finished mechanism?

A. I had not been able to procure them.

60 Q. Had you made efforts to do so?

A. I had.

61 Q. Had you applied to Commodore Folger?

A. I applied to Commodore Folger in November, 1891.

Counsel for the complainants offers a letter in evidence. It is marked "Complainants' Exhibit Letter 2."

62 Q. This letter, which has now been marked "Complainants' Exhibit Letter 2," was in response to a request from you for blue prints of Dashiell's four-inch mechanism, was it?

A. It was.

63 Q. Did you apply to Ensign Dashiell for a drawing, or a description of his mechanism?

A. As I recollect it, I asked for a description or some idea of it; I could not ask for drawings.

64 Q. That was in December?

A. December, 1890.

65 Q. That was by letter?

A. By letter.

66 Q. You received a reply?

A. The reply was it could not—the drawing could not—be given, because the patent had not been secured.

67 Q. And also that he had orders against letting others see the plans?

A. Yes.

68 Q. Is this the letter?

A. Yes.

34 Counsel for complainants offers the letter in evidence. It is marked "Complainants' Exhibit Letter 3."

Counsel for complainants offers in evidence a copy of the "Scientific American," published in New York, bearing date May 24, 1890—simply that part of it which contains a description entitled "Seabury breech mechanism for rapid-firing and other guns." It is marked "Complainants' Exhibit 'Scientific American.'"

No cross-examination.

SAMUEL SEABURY.

Subscribed and sworn to before me this 28th day of October, 1892.

(S'd) SAM'L A. BLATCHFORD,
A Commissioner of the Circuit Court of the United States for the Southern District of New York, in the Second Circuit.

Circuit Court of the United States for the District of Maryland.
In Equity.

JAMES B. M. GROSVENOR, LAVINIA WILSON, Samuel Seabury, and Edward H. Litchfield, Complainants,
against
ROBERT B. DASHIELL, Defendant.
} Certificate of Commissioner.

To the circuit court of the United States for the district of Maryland:

I, Samuel A. Blatchford, a commissioner of the circuit court of the United States for the southern district of New York, do hereby certify and report to this court as follows:

First. That in accordance with the notice hereto annexed, marked "Complainants' Exhibit Notice of Taking Testimony, S. A. B., commissioner," I proceeded on the 18th day of October, 1892, at my office, No. 16 Exchange place, in the city of New York, to take the testimony of the witness Samuel Seabury on behalf of the complainant- pursuant to said notice.

Second. That in accordance with the stipulation made by counsel for the respective parties which is entered in the minutes to the effect that the testimony taken before me under the notice might be taken in my presence by a stenographer, and afterwards typewritten and subscribed by the witness, the testimony of the said witness Samuel Seabury was taken down in my presence by a stenographer, afterwards typewritten and subscribed by the said witness, and his testimony is hereto annexed and transmitted to this court herewith comprising pages 1 to 15 inclusive.

Third. That the said witness was by me duly cautioned and sworn to testify the whole truth, and was carefully examined, and his deposition when written out on the typewriter in accordance with said stipulation was read over by him and subscribed and sworn to in my presence on the day when it purports to have been so subscribed and sworn to.

Fourth. That the reason why the testimony of said witness was so taken before me was that the said witness lived at a greater distance than one hundred miles from the place of trial of this action, to wit, at Bayonne, New Jersey, and reasonable notice was first given in writing by the attorney for the complainant- proposing to take the deposition of said witness to the attorney and counsel for the opposite party, which notice stated the name of the witness and the time and place of taking his deposition, as appears by the notice annexed hereto, and the certificate of service of the United States marshal for the District of Columbia endorsed thereon.

Sixth. That the said Samuel Seabury was the only witness produced and examined before me on behalf of the complainants under said notice.

Seventh. That the paper hereto annexed, embracing fifteen typewritten pages, contains a full, true and complete record of the testimony of said witness examined before me as aforesaid, and of all the proceedings had before me on his examination.

Eighth. That none of the papers referred to in the testimony of said witness as produced before me and marked as exhibits are returned to this court herewith for the reason that the solicitors for the parties to the suit have signed and filed with me a stipulation that the original exhibits which may have been, or may be, offered in evidence by either party in taking any deposition or testimony in this cause, need not be filed with the proofs, but may be retained by the respective parties and produced upon any hearing before the court, and said stipulation is hereto annexed and returned to this court marked "stipulation respecting exhibits."

Ninth. That I am not of counsel for nor related to any of
36 the parties to this action, nor interested either directly or indirectly with the parties herein.

All of which is respectfully submitted.

Dated New York, October 28, 1892.

(S'd) SAM'L A. BLATCHFORD,
A Commissioner of the Circuit Court of the United States for the Southern District of New York, in the Second Circuit.

Circuit Court of the United States for the District of Maryland.

JAMES B. M. GROSVENOR *et al.*, Complainants,
vs.
ROBERT B. DASHIELL, Defendant.

WASHINGTON, D. C.,
December 21, 1892—10 o'clock a. m.

Be it remembered that on the 21st day of December, A. D. 1892, at the office of Phillips & McKenney, Sun building, Washington, D. C., the depositions of the witnesses hereinafter contained were taken before me, an examiner in chancery, in and for the supreme court of the District of Columbia, by consent of counsel.

Present on behalf of the complainants, Mr. Wilson. Present on behalf of the defendant, Mr. Phillips.

Whereupon—

ALBERT R. COUDEN (lieutenant commander, United States Navy), a witness of lawful age, called by and on behalf of the complainants, having been first duly sworn, is examined—

By Mr. WILSON:

Q. Where are you now stationed?

A. I am in the Ordnance Bureau of the Navy Department.

Q. How long have you been stationed there?

A. I have been stationed there since April 11, 1891.

Q. Where were you in May, 1890?

A. I was at sea, on board the Atlanta.

Q. Your first assignment to your present position was in April?

A. April 4th I was assigned to duty, but I reached the department on the 11th of April, 1891.

37 Q. What is the nature of your duty in the Bureau of Ordnance?

A. My duties are almost entirely confined to questions of armor.

Q. Have you had anything to do with examining designs for breech mechanism for guns?

A. Nothing whatever.

Q. Have you counselled with regard to that matter with the officers of the Ordnance Bureau?

A. Not until within the last two or three months, with reference to another mechanism entirely.

Q. Was that the first connection that you had with any questions of breech mechanisms?

A. I have had no official connection with them at all, at any time.

Q. What you have done in that regard has been simply a matter of conversation?

A. A matter of conversation and of professional curiosity; that is all.

Q. Did you have any knowledge of Dashiell's invention, as it was progressing?

A. None at all. It was finishe l and on the proving ground before ever I saw it or saw the drawings.

Q. When did you first hear of Seabury's design?

A. I heard of Dashiell's design when I first came to the bureau, on my return.

Q. When did you first hear of Seabury's design?

A. At practically the same time; probably within a few days of each other, or on the same day. I do not know about that.

Q. From what source did you hear of Seabury's design?

A. I heard it talked of in the bureau. I heard it mentioned that there were two designs, Seabury's and Dashiell's.

Q. That was merely during conversation amongst your fellow-officers?

A. There was no particular talk about it. I was getting up on these things. There was no particular discussion about it, that I remember.

Q. You received that information amongst other items of information when you joined the bureau?

A. Yes, sir.

Q. You learned that there were such designs?

A. Yes, sir.

38 Q. Did you then learn that Seabury's drawings were in the possession of the bureau?

A. I understood that they were in the possession of the bureau, but I do not think I saw them. I do not know that I have ever seen them, to this day.

Q. Can you say who told you that?

A. I cannot, unless it was Lieutenant Fletcher.

Q. Did Commodore Folger ever tell you anything about it?

A. No; I don't think he did. It is most likely it was Mr. Fletcher or Mr. Alger.

Q. Did you ever have any conversation with Commodore Folger with regard to Seabury's designs, or Seabury's claims?

A. I do not think I had any conversation of any moment with him. He never discussed the matter with me, as to whether he was right or wrong.

Q. Did you ever hear it discussed by him in your presence?

A. No; I do not think I ever have. He may have made remarks about it, but nothing of importance.

Q. You cannot recollect anything he said about it?

A. I have heard him mention it. I heard him mention it this

morning; but he never discussed the matter with me, because I had nothing whatever to do with it.

Cross-examination waived.

ALBERT R. COUDEN.

PHILIP R. ALGER (professor of mathematics, United States Navy), a witness of lawful age, called by and on behalf of the complainants, having been first duly sworn, is examined—

By Mr. WILSON:

Q. What is your official position?

A. I am professor of mathematics, attached to the Bureau of Ordnance of the Navy Department.

Q. How long have you held that position?

A. I have been in the bureau since April, 1888. I have not held my present rank since that; but I have been attached to the bureau and had the same duties to perform since April, 1888.

Q. What is the nature of your duties?

A. They are rather hard to define. I have had mathe-
39 matical computations to make, and general work connected with the designs of guns and powder proof.

Q. Are you stationed in the office of the Bureau of Ordnance in the Navy Department?

A. Yes, sir.

Q. There are draughtsmen there?

A. Yes, sir.

Q. Are they in any way under your direction or charge?

A. When any one of them is doing work which I have charge of, I give him directions; but they are not especially under me.

Q. You are in daily attendance there, I suppose?

A. Yes.

Q. You have heard of the designs and inventions of Lieutenant Seabury in breech mechanisms for cannon?

A. I have heard of his designs.

Q. When did you first hear of such designs and inventions?

A. I think the first specific information I had about it, as to the details, was in April, 1890. I received at that time a letter from Mr. Seabury, and drawings of his breech mechanism. The letter contained a very complete description of it. It was a personal letter to me. I think I have the letter and the drawing somewhere in the bureau. They have not been on file at all, and have been in or about my desk since that time. Just before that, or just after that, I am not certain which, Mr. Seabury came to the office with the model, which he showed me.

Q. You remember that occasion?

A. Yes; I was present on that occasion, and looked at the model; but I am not certain whether it was before or after the receipt of the drawings. That was in April, 1890.

Q. Who else was present when that model was exhibited?

A. He showed it to the chief of bureau, I believe, and if I recol-

lect rightly, he came twice. The first time I saw it, and there may have been other persons about then. I think he came a second day, or perhaps later on the same day, and the chief of the bureau was present, but I am not absolutely certain about that.

Q. Is it not a fact that he came there the first day, and Commodore Folger was absent; that he then showed the model to the officers present, and returned on the following day, when Commodore Folger was there, and showed it to him?

40 A. Very probably it is. I saw it, however, on both occasions. I had forgotten whether he came back on the same day or came the next day.

Q. Were drawings of his invention received at the bureau shortly after that?

A. I do not know. I do not remember whether I have seen any others than the ones sent to me personally, which I still have.

Q. Were you familiar with the different designs that were in any sense officially before the bureau at that time? I mean, of course, designs for breech mechanism.

A. There were no designs for rapid-fire breech mechanisms before the bureau at that time, except these. There has been a good deal of talk in the bureau about getting up a design there.

Q. Was not the Driggs-Schroeder design before the bureau at that time?

A. Yes, sir; I had forgotten that. That had been before the bureau.

Q. It had not been then decided whether to adopt it or not?

A. It had been decided at that time, I believe, to make some guns of that design, and if I recollect rightly, arrangements had been made by Commodore Sicard, who was the predecessor of Commodore Folger in the bureau, to use that design for a certain price. That is, arrangements had been made at a certain figure for its use, if it was decided to use it. I think they had commenced to make two guns, as an experiment.

Q. At that time it was awaiting a satisfactory test?

A. Yes, sir; prior to the adoption of it. There had been, so far as I am aware, no design adopted for use. In fact, I know there had not been.

Q. As I understand you, there was no other breech mechanism for rapid-fire guns before the bureau at that time?

A. I say I do not know of any other.

Q. I mean so far as you know.

A. I do not think any other had been presented at that time.

Q. Was there any design that had then been presented, so far as you know, that was adapted to rapid fire, with the interrupted screw-block?

A. I am not aware of any.

41 Q. When did you first see any designs, after that time, other than Seabury's for breech mechanism, designed to give the advantages of rapid fire by using the interrupted screw-block?

A. I cannot say. I have no recollection when I first saw the Dashiell breech mechanism.

Q. Was that the first that you did see?

A. That is the first one that I saw, I believe, after that time. In fact, I have not seen any other that I am aware of, except recently. Recently I have seen another one; but, prior to that time, I had only seen the two presented to the bureau; that is, the Seabury and the Dashiell design.

Q. Did you see the drawings made of the Dashiell design in the bureau?

A. I do not think the drawings were made in the bureau at all. The first drawings, I think, were presented by Mr. Dashiell himself.

Q. Can you approximate the time of that?

A. No; I do not remember.

Q. Was it during the year 1890?

A. I do not remember; but I should think it must have been about the same time that the Seabury design was presented. I would not even say positively that it was not before the Seabury was presented; but I do not think I saw it before that. I think probably it was a short time afterwards.

Q. You would recollect, would you not, whether the Seabury design struck you as the first of that kind you had seen, or whether the Dashiell struck you as the first?

A. Neither of them would strike me as the first, because I have had knowledge of a breech mechanism which resembled them, as I thought, and which I obtained abroad. I did not think, when I first saw the Seabury, or when I first saw the Dashiell, that it was, in its main idea, anything new. I mean to say I think there had been something similar to them in use before.

Q. My question is whether it did not make an impression on you as to the priority of the one over the other, in the time of your seeing them?

A. Yes; I told you that I thought the Seabury was the first one I saw, and it was some time after that, probably a short time afterwards, that I first saw or heard of the Dashiell design.

Q. You can remember no date in regard to the Dashiell?

A. No; the only date I remember is when I received this letter with the drawings from Mr. Seabury.

Q. Did you show that to the other officers in the bureau?

42 A. I must have done so. I do not remember about it now. I am certain, however, that I did show it to other people in the bureau.

Q. Did you show it to Dashiell?

A. No; he was not in the bureau.

Q. He was in the bureau subsequently, was he not?

A. I do not think I ever showed it to him. I am quite sure I did not.

Q. Did you see the same design in the public prints about that time?

A. I did, some time subsequent to that.

Q. In what prints?

A. In the "Scientific American," I think. There were a number of cuts, presenting the design in different positions.

Q. Is that paper taken at the Bureau of Ordnance?

A. No; I knew of it because I was getting up an examination for draughtsmen, and I gave this as a question to be asked of a man in his examination as a draughtsman.

Q. In the examination of whom?

A. For the Civil Service Commission—questions to be asked a draughtsman.

Q. Have you, personally, had any work to do in adapting the Dashiell designs to actual guns?

A. No. I believe that I fixed the dimensions of the breech lock itself, that is the length, the diameter, the size of the threads on the block for the guns to which he fitted the breech mechanism.

Q. You computed the necessary proportions to give the necessary strength?

A. Simply as to the plug. It is a slotted plug.

Q. Did you have anything to do with the work at the navy yard?

A. I go over there occasionally, when there is any point up which I am interested in. I have no direct connection with it.

Q. Did you ever see any of the Dashiell mechanism in process of construction at the navy yard?

A. I must have seen a good many in the process of construction. I do not remember about that.

Q. When did you see the first one?

A. I cannot tell you that. I have no idea about it.

Q. Was it in 1890?

A. I should hardly think it could have been then. It may have been in the fall of 1890, possibly; but I do not remember about it.

43 Cross-examination.

By Mr. PHILLIPS:

Q. I understood you to say that you did not regard either Seabury or Dashiell as the earliest inventor of this particular construction?

A. No; I did not say that, exactly. I said that I knew there had been in use mechanisms for opening and closing a slotted-screw breech mechanism with a single motion, and that is the main idea in these designs.

Q. To whom did you allude?

A. I alluded to the Canet breech mechanism, which I had heard of, and also the Farcot, which was somewhat different, and which I had seen a good many years before. This design opened the breech block by a single motion of a lever, and opened it by a continuous motion of the hand in one direction. My recollection is that by turning a crank constantly, you perform the motions of turning, withdrawing and swinging round the breech block, and I suppose

that to be the ground of all these things. That is where they started, as to the main idea.

Q. Do you know anything about Nordenfelt's process?

A. I do not know that Nordenfelt had any such mechanism.

Q. Have you any other name that you can recall, except those of Canet and Farcot?

A. I believe the Armstrong people used something of that general nature. I do not remember the Armstrong design exactly; but they use a slotted-screw breech mechanism in rapid-fire guns.

Q. With a single motion?

A. I should think they must have a single motion. They have, I believe, conical plugs, so that all they have to do is to turn and swing. I should say that these two motions were probably performed by one motion of a lever; but I am not familiar with the mechanism.

Q. Are there any other devices showing a single motion?

A. Recently I have seen another one—within a few months.

Redirect examination.

By Mr. WILSON:

Q. The Armstrong plug, as you understand it, is a conical plug?

A. I believe it is.

44 Q. And the conical shape enables you to dispense with one of the three motions which are necessary in a cylindrical plug?

A. Yes.

Q. In a cylindrical plug, there are three things to be accomplished; first, to rotate the screw-block through the necessary arc to free the screw-thread; second, the withdrawal of the block on a direct line of the axis of the bore; and, third, the swinging of the whole clear to one side so as to leave the bore of the gun free for loading?

A. Yes.

Q. And the reverse of these motions to lock the block again, preparatory to firing?

A. Yes; except that there is one important addition necessary to be made, and that is as to the method of extraction, in rapid-fire guns using cartridge cases. At the same time with these motions, it is necessary to perform the act of withdrawing the case.

Q. That is, where fixed ammunition for cartridge cases are used?

A. Yes, sir.

Q. And when they are not used, then the gas check is attached to the breech block itself, is it not?

A. It may be.

Q. And partakes of its motions?

A. It may be, and probably is.

Q. The opening and shutting of the breech is confined to three motions I have mentioned?

A. Yes, sir.

Q. And if there is a cartridge case or fixed ammunition used, then it is necessary to have an extractor which will remove the shell after firing?

A. Yes.

Q. Confining ourselves to the three motions for opening and shutting the breech, it is necessary that they should be combined in that order in any mechanism for opening and shutting a screw-block, is it not?

A. I should think so.

Q. And those motions have to be made either by machinery or by hand, and are indispensable, are they not?

A. Yes.

Q. The similarity that you have noticed and spoken of in the inventions of Canet, Seabury and Dashiell reside mainly in this: that each one of them is designed to perform these three functions successfully by the use of a single lever, do they not?

A. That is all. That is the only resemblance that I was referring to.

Q. Would it be possible to devise any way of opening and shutting the block which would not involve these three motions in that order?

A. No; I should think that any device for working a slotted screw would have to be a good deal like any other.

Q. That is, it would have to be a machine that could do that work or perform those three functions in that order?

A. Yes.

Q. And it would not necessarily follow that the machine was the same, because it could do the same work?

A. Not at all; but what I meant to say was that if you knew a certain man had first thought of that idea of performing these three motions successively with a single motion, you would naturally consider him as the ground inventor; not at all as a question of law, but simply as a question in your own mind, in thinking about it.

Q. Do you happen to know who first thought of that?

A. No; I do not. I take it, however, that Farcot was the man.

Q. I would rather you would not state what you think or suppose, but what you know. You do not know on whose mind that idea first dawned?

A. No; I do not.

Q. Did you ever work on the problem of devising such a machine yourself?

A. I do not think I have.

PHILIP R. ALGER.

ABRAHAM E. CULVER (lieutenant United States Navy), a witness of lawful age, called by and on behalf of the complainant-, having been first duly sworn, is examined—

By Mr. WILSON:

Q. You are attached to the Bureau of Ordinance at the Navy Department?

A. I am.

Q. Where is your station?

A. At the Bureau of Ordnance, Navy Department.

Q. How long have you been in that position?

A. Since June, 1890; or, possibly, May, 1890. I am not sure about that.

46 Q. What is your special duty, or in what direction does your special duty lie?

A. Principally in the arranging of the outfits for ships.

Q. Does it have to do with the designs of guns and mechanisms?

A. Not at all.

Q. You mean the arrangement of the batteries.

A. The arrangement of batteries, stores, equipments, &c.

Q. Were you at the bureau at the time when Lieutenant Seabury came there in the spring of 1890 with a model and design of his breech mechanism?

A. I do not remember any such circumstance.

Q. You have no recollection of it?

A. None.

Q. Did you ever see his drawings there?

A. I think I have seen his drawings, but I think very possibly, they are the ones that Professor Alger referred to.

Q. Were they blue prints?

A. I think they were tracings.

Q. Does your duty involve the consideration of the character of guns to be placed on ships?

A. In a general way. That, however, is generally decided by the chief of the bureau, in advance, or by a board that has charge of it.

Q. It is decided by them what guns the ship is to carry?

A. Yes; and whether they are to be rapid-fire or ordinary breech-loading guns.

Q. And it is left to you to arrange the batteries most satisfactorily?

A. Yes, sir.

Q. Have you ever had any discussion with Commodore Folger with regard to the Seabury mechanism?

A. None.

Q. Did you ever hear him say anything about it?

A. Only in the most general way.

Q. What have you heard him say?

A. I cannot tell.

Q. Have you ever been consulted as to the desirability of using the Dashiell mechanism?

A. No.

Q. In any of these batteries?
A. No; I was simply told that it was to be used.
Q. When were you told that?
A. Three months ago.
Q. Was that the first time?
A. Yes.

47 Q. You prepared designs or arranged for the armament of ships carrying guns of the Dashiell mechanism prior to that, did you not?

A. It was not decided about the mechanism, I believe. It was simply decided that they were to be rapid-fire guns.
Q. And it is only within the last three months that you have understood the Dashiell mechanism was to be employed in those guns?
A. Yes.

Cross-examination waived.

ABRAHAM E. CULVER.

F. F. FLETCHER (lieutenant in the United States Navy), a witness of lawful age, called by and on behalf of the complainant, having been first duly sworn, is examined—

By Mr. WILSON:

Q. You are attached to the Bureau of Ordnance at the Navy Department?
A. Yes, sir.
Q. How long have you been connected with that bureau?
A. Since January, 1888.
Q. What is your particular department, or special duty there?
A. I have been especially connected with the question of mounting guns.
Q. Gun carriages?
A. Gun carriages.
Q. As incident to that, have you had to do with breech mechanisms also?
A. Only in a general way, as, occasionally, some correspondence on the subject would come to my notice
Q. I suppose you have been more or less familiar with what has been going on in the bureau with reference to guns?
A. Yes, in a general way.
Q. Do you remember Lieutenant Seabury coming to the bureau in the spring of 1890 with a model and some designs for a breech mechanism?
A. I do; but I cannot state as to when it was. I think it was about that time.
Q. About May, 1890, was it not, according to your best recollection?
A. It was about that time.

48 Q. Did you see the design?
A. I did.

Q. And the model also, at that time?

A. Yes, sir.

Q. Were you present when they were shown to Commodore Folger?

A. I was.

Q. In Commodore Folger's room?

A. In his office, or in the office connected with his room.

Q. At that time, what designs for breech mechanisms for rapid-fire guns did the bureau have before it for consideration other than this one of Seabury's?

A. I do not know what designs the chief of bureau had under consideration, other than the Driggs-Schroeder design.

Q. The Driggs-Schroeder was the only one you had heard of?

A. It was the only one I had heard of, or had any knowledge of the bureau's contemplating the use of or trying.

Q. You had seen the Driggs-Schroeder device at that time, or a design of it, I suppose?

A. I had seen a design of it; yes, sir.

Q. Did that have any resemblance to the Seabury design?

A. None.

Q. In the Driggs-Schroeder device, I believe the breech is closed by a single block?

A. By what is known as a falling block, introduced something like a wedge through the body of the gun, so as to close the breech tightly?

Q. It is on that general principle, as distinguished from a slotted screw. It does not use the slotted screw in any way, does it?

A. No, sir; it would not be called a slotted screw.

Q. Did you see the blue prints of Seabury's design which were received by the Bureau of Ordnance after that visit of 1890?

A. I did.

Q. There were two sets of these blue prints, one for a four-inch and one for a six-inch gun, were there not?

A. I could not state positively, but I think there was.

Q. Where did you see them?

A. In the bureau.

Q. Did you see them when they arrived?

A. Yes, sir; about that time.

49 Q. What was done with them?

A. I think they were placed on file in the drawing-room.

Q. Were they examined by Commodore Folger?

A. That I cannot say.

Q. You did not see him examine them?

A. I did not see him examine them.

Q. They were placed on file in the drawing-room. That is, they were filled with other drawings accessible to all the officers, were they not?

A. Yes, sir; I believe they were.

Q. Did you ever see them taken out again?

A. I do not remember seeing them taken out again.

Q. Did you ever see them again?

A. That I cannot say. I do not remember. I may have seen them; but I had no occasion to refer to them.

Q. Did you ever see them in the hands of any of the draughtsmen of the bureau?

A. They necessarily pass through the hands of the chief draughtsman when he files them and gives them the number and records them.

Q. What is the name of the chief draughtsman?

A. Mr. Stellwagen.

Q. Did he occupy that position in the spring of 1890?

A. He did.

Q. And still holds it?

A. He still holds it.

Q. Can you tell when you first saw any designs of Dashiell for a breech mechanism of a rapid-fire gun?

A. I cannot give the date when I first saw the Dashiell drawings. I do not remember.

Q. Can you say whether it was before or after the arrival of the Seabury blue prints?

A. Yes, sir; it was after the arrival of the Seabury blue prints.

Q. Was it long enough after that event to leave an impression on your mind that it was quite a while afterwards?

A. The impression is that it was some three or four months; but I cannot make any definite statement about that.

Q. Where did you first see the Dashiell design?

A. In the Bureau of Ordnance.

Q. Was Dashiell stationed at the bureau at that time?

A. He was stationed at the proving grounds, at Annapolis, at that time.

50 Q. Do you remember the fact that for a few months he was at the Bureau of Ordnance in the Navy Department?

A. At that time?

Q. During the year 1890.

A. I do not remember that he was in the Bureau of Ordnance during that year.

Q. Was he not engaged there in preparing plans for proving grounds and some work upon it?

A. I do not think he was there at that time. I think his being there was subsequent to this, as I remember it.

Q. When you saw his drawings there, in whose hands were they?

A. I think they were in the hands of the draughtsman.

Q. Were the draughtsmen making drawings, or copying them, or what were they doing with them?

A. He was preparing drawings from these blue prints.

Q. The first drawings, then, that you saw of Dashiell's were blue prints?

A. Yes; if I remember rightly.

Q. And the draughtsmen were preparing what—working drawings or detailed drawings?

A. I do not know what the drawings were intended to be used for.

Q. You do not know whether they were intended for use in an application for a patent?

A. I do not; I heard nothing in regard to what they were to be used for.

Q. Were they of the character and size of the drawings I now show you, as well as you can now recollect (showing the witness a copy of the Dashiell patent No. 468,331)?

A. If I remember rightly, they were much larger than this. That is only an impression. I could not state positively about it.

Q. At the time when you saw the Dashiell drawings for the first time, was there any other device for a breech mechanism adapted to an interrupted screw-block before the bureau, except that of Dashiell's?

A. That is a question which concerns the chief of the bureau only, and I could not answer it.

Q. I mean so far as your knowledge goes?

A. Not to my knowledge.

Q. Did you see the draughtsmen working after that, at other times, upon Dashiell's drawings or design?

A. I do not remember any other work done in the bureau on that design.

51 Q. Was Dashiell, at that time, an assistant in the bureau?

A. If I remember rightly, he was not.

Q. Were any of the assistants in the bureau working on rapid-fire mechanism, so far as you know?

A. Not that I know of.

Q. Or maturing any devices of that character?

A. Not that I know of.

Q. Do you know when the first work was done in adapting the Dashiell device to an actual gun?

A. I do not.

Q. Do your duties take you occasionally to the navy yard?

A. Yes, sir.

Q. You have seen work of that kind going on there, have you not?

A. Breech-mechanism work—yes, sir.

Q. Of the Dashiell design?

A. Yes; work has been going on at the yard on a breech mechanism of that design.

Q. For how long a time has that work been going on there within your recollection?

A. The time is rather indefinite. I should say it had been for about a year and a half. I do not know exactly when it commenced.

Q. It commenced some time in the first half of the year 1890, would you say?

A. Perhaps about that time. That is a matter of record, however.

Q. Do you know how many guns have been fittered with that mechanism?

A. I do not.

Q. Is it a large or a small number?

A. You mean completed to date, or just being fitted?

Q. Either completed or being fitted.

A. About forty completed or in a state of completion, I should say.

Q. Did you ever hear Commodore Folger say anything about the preparation of the Dashiell designs, or did you hear him give any directions to Dashiell on that subject?

A. No, sir; I never heard him give Mr. Dashiell any directions.

Q. Did you ever hear him say anything about the Seabury designs after the first interview at which the model was shown to him?

A. Yes, sir.

52 Q. What was it?

A. If I remember rightly, I heard him express the opinion that it was rather complicated.

Q. When was that?

A. That was shortly after his having seen the model work.

Q. Did you ever hear him speak of it after that, as to its comparative merits with that of Dashiell's?

A. I never heard him compare it with any other mechanism, except in the way that I have mentioned.

Q. Did you ever hear him say anything else about the Seabury designs?

A. You mean in regard to what?

Q. In any regard.

A. No; I do not remember now of anything he ever said about it.

Q. Did he ever say anything to you as to his obligation to use the Seabury design?

A. There is nothing I remember that he said on the subject.

Q. Did he ever say anything to you about his liberty to use anything else than the Seabury?

A. No; I don't remember of having any conversation with him on that subject, or of hearing him discuss it.

Q. Was there a time when the work on the Dashiell mechanism at the navy yard was stopped?

A. I do not remember of its having been stopped.

Q. How frequently were you at the navy yard?

A. I average a visit three about once a week.

Q. Would you not have noticed it if the work had been stopped for some time?

A. I would not have noticed it from seeing it in the shops. The only way I would know would be from hearing that an order was given to stop the work.

Q. Did you ever hear that?

A. I never heard of it; no, sir.

Q. Did you know what was going on during the time that intervened between Dashiell's application for a patent and the period when the patent was granted? I mean, what steps were taken to obtain a patent? Did you have anything to do with that?

A. I had nothing to do with it.

Q. Or did you hear anything about it from Commodore Folger or Dashiell?

A. I was under the impression that he was getting up
53 drawings at that time, in order to take out a patent on the mechanism.

By Mr. PHILLIPS:

Q. Who do you mean?

A. I understood that Mr. Dashiell was going to take out a patent on that device.

By Mr. WILSON:

Q. Did you hear of any of the difficulties he experienced in getting a patent, according to his original application?

A. I am under the impression that somebody told me——

Mr. PHILLIPS: I object to that.

Mr. WILSON: I will not ask you to tell your impressions.

By Mr. WILSON:

Q. Do you know whether modifications were made in the drawings during the time when the application was pending?

A. I do not know positively that there were. I am under the impression that there were.

Q. Did you see the draughtsmen of the bureau working on such drawings from time to time?

A. I saw the draughtsmen working on the drawings of the Dashiell breech mechanism.

Q. With reference to the proceedings in the Patent Office?

A. I do not know what the drawings were intended for. I understood that they were for that purpose.

Q. Was Dashiell there, from time to time, consulting with the draughtsmen?

A. I do not remember of having seen him there consulting with the draughtsmen. He may have been there.

Q. Was he frequently there consulting with Commodore Folger?

A. I cannot say that he was there frequently. I have seen him in the bureau occasionally; but whether he was there with reference to that subject, I do not know.

Q. Do you know anything in regard to the contract between Dashiell and the Bureau of Ordnance or the Navy Department, for the payment of royalties or other compensation for the use of his mechanism?

A. I do not know anything except from hearsay.

Q. Have you heard anything from Mr. Dashiell or Commodore Folger on the subject?

54 A. I heard Commodore Folger express the intention of paying Mr. Dashiell a royalty.

Q. From what source had you heard of that contract, if there was any?

A. I heard in the bureau that there was a contract to pay him a royalty on the first one hundred guns.

Q. You know nothing personally of the contract?

A. I had nothing to do with it personally.

Q. I suppose you do not know whether any payments have been made upon it?

A. I know nothing about that.

Q. That would not come under your observation naturally, would it?

A. No, sir.

Q. Did you ever hear Commodore Folger express the determination to use Dashiell's mechanism regardless of the question whether it was an infringement on other patents or not?

A. I have heard him say that he was going to use it.

Q. Without regard to this condition?

A. In speaking of the subject of patent rights, relative to the Dashiell *versus* the Seabury mechanism, he said that he would use the Dashiell mechanism.

Q. Did he mention the Seabury design in the same connection?

A. If I remember now, the question was whether Dashiell's was an infringement on the Seabury mechanism, and he said that he would use the Dashiell mechanism.

Q. Was this in conversation?

A. With me; yes, sir.

Q. And in conversation with yourself?

A. It was not particularly a conversation. It was simply a question. He asked me about what I thought of the Dashiell mechanism.

Q. What did you answer him?

A. I said that I thought it was very similar to Seabury's, and that a question as to patent rights might arise.

Q. Was that all the conversation—what did he say in response, as near as you can remember?

A. He said, "Well, I think I will use the Dashiell mechanism."

Q. Did he say anything about having the question of patent rights first determined?

A. No, he had no conversation with me on that subject.

55 Q. I mean on this occasion?

A. No, sir; nothing.

Q. Nothing was said about obtaining any opinion as to the question of infringement?

A. No; he said nothing to me in regard to that.

Q. Nor in your presence?

A. Nor in my presence, that I remember of now.

Q. Did you give it as your opinion that the Dashiell was close enough to the Seabury to be probably an infringement?

A. I gave it as my opinion that the question might arise. I thought they were so near together that the question might arise.

Q. The question had risen naturally in your mind, then?

A. Yes, sir; it had.

Q. And you thought it was a serious one, did you?

A. I thought enough of it to mention it.

Q. Was anybody else present at that conversation?

A. There may have been, but I do not remember it.

Q. Who, if any one, would have been the other party or parties?

A. It would have been Mr. McCracken or Mr. Fenton, of the bureau corps of assistants.

Q. Are they officers of the navy?

A. They are.

Q. Are they there now?

A. Mr. Fenton is there, but Mr. McCracken is in China.

Q. Did Mr. Fenton have to do with the work of the draughtsmen in any way?

A. When he has work for the draughtsmen to do, he superintends the work.

Q. What is his especial duty?

A. It relates especially to the mounting of guns in turrets.

Q. Do you remember whether he had anything to do with superintending or aiding the draughtsmen with Dashiell's designs or their adaptation to different sizes of guns?

A. I think he had nothing to do with that.

Q. If he was present during this conversation his presence was merely casual?

A. Merely casual. He may not have heard it, as he was engaged in other work.

Q. Was it in the room where he was ordinarily employed?

A. It was in the same room.

Q. What room is that?

A. It is the room next to the chief clerk's room.

56 Q. Who else was employed in that room at that time?

A. Mr. McCracken, Mr. Fenton and myself.

And thereupon the drawings produced by Mr. Joseph Brummett, chief clerk of the Bureau of Ordnance, are exhibited to the witness.

Q. Please look at the drawings now shown you, and state whether they are the drawings you referred to in your testimony as the Seabury blue prints, which you saw in the Bureau of Ordnance about the time they were received.

A. No, sir. As I remember, these are not the drawings I refer to.

Q. These drawings are designs for a six-inch breech-loader, and an eight-inch breech-loader, are they not?

A. They are designs and have the slotted screw-blocks for guns of those calibers.

Q. And the drawings that you first saw, received by the Bureau of Ordnance, were drawings for a slotted screw-block for a four-inch caliber, were they not?

A. Yes; for a rapid-fire gun.

Q. Having the extractor as well as the other parts of the breech mechanism?

A. Using fixed ammunition with an extractor. I cannot state positively that I saw these drawings of a six-inch rapid-fire mechanism.

Q. Do you remember that you did see the drawings for a four-inch gun?

A. I simply remember that I saw drawings of the Seabury mechanism for a rapid-fire gun, in the form of blue prints.

Cross-examination waived.

F. F. FLETCHER.

FRANCIS E. GREEN (lieutenant United States Navy), a witness of lawful age, called by and on behalf of the complainant, having been first duly sworn, is examined—

By Mr. WILSON:

Q. Are you stationed at the navy yard in this city?

A. I am.

Q. How long have you been there?

A. About a year.

Q. What was your station prior to that?

A. I was at the proving ground at Annapolis, Maryland.

57 Q. Were you connected with the Bureau of Ordnance?

A. Yes, sir.

Q. What are your duties, especially at the present time?

A. I have charge of miscellaneous work on six-inch-gun carriages and their appurtenances.

Q. Do you have anything to do with breach mechanisms?

A. No, sir.

Q. Who has more particularly the charge of that work at the navy yard?

A. Breech mechanism for 12 and 13 inch guns is under the supervision of Ensign Key. The lower calibers are looked out for by Lieutenant Gibbons, of the navy, and Lieutenant Conklin, of the army; Ensign Foyer, of the navy, and Lieutenant Reynolds, of the navy.

Q. Are all of those engaged at the navy yard?

A. Yes, sir.

Q. Do you know when the manufacture of Dashiell's breech mechanism for rapid-fire guns was first commenced at the navy yard, or was it begun before you were detailed to that duty?

A. They were working on the Dashiell breech mechanism before there. I am almost confident about that.

Q. Was there a time when that work was stopped for any period?

A. Not to my knowledge.

Q. You do not know of any such case since you have been stationed at the navy yard?

A. No, sir, I have never heard of it.

Cross-examination waived.

FRANCIS E. GREEN.

The further taking of these depositions was thereupon adjourned until Thursday, December 22, 1892, 10 o'clock a. m.

WASHINGTON, D. C.,
December 22, 1892—10 o'clock a. m.

Met pursuant to adjournment at the office of Phillips & McKenney, Sun building, Washington, D. C.

Present on behalf of the complainant-, Mr. Wilson; present on behalf of the defendant, Mr. Phillips.

Whereupon WILLIAM MAYHEW FOLGER (commodore United States Navy), a witness of lawful age, called by and on behalf of the complainant-, having been first duly sworn, is examined—

58 By Mr. WILSON:

Q. You are the chief of the Bureau of Ordnance of the Navy Department?

A. Yes, sir.

Q. And have been stationed in this city how long?

A. This last time since October, 1888.

Q. Have you occupied that position since that time?

A. No; I have occupied that position since February, 1890. Previous to that I was inspector of ordnance at the navy yard, at Washington.

Q. When were you first informed that Ensign Dashiell had designed a breech mechanism for a slotted screw-block, with the intention of giving more rapid fire to cannon?

A. I first directed his attention to our not having anything of the kind suitable for use, while I was inspector of ordnance in the Washington yard in the latter part of 1888 or early in 1889. It was, at any rate, in the winter time.

Q. What was his position at that time?

A. He was stationed at the proving ground at Annapolis.

Q. When did you first learn that he had accomplished anything in that direction?

A. I heard from him perhaps from time to time. I recollect certainly of one occasion while I was still at the yard, when I had a conversation with him as to the progress he was making in the subject, urging him to push along; but the first definite evidence I had that a conclusion might be reached was, I think, in the year 1890, after I came to the Bureau of Ordnance, late in the spring or early in the summer. He then brought me a model, composed of metal and wood, which I took to the Secretary of the Navy.

Q. Can you fix the date any more closely than that?

A. No, I cannot, but it was in the spring, as I recollect it. It was a month, or two or three months after I came into the bureau.

Q. How large was that model?

A. Four or five inches in exterior dimensions.

Q. How large a bore did it show?

A. As I recollect, it was an inch and a half.

Q. Had you seen that model before it was finished?

A. No, sir; it was a completed thing when I took it up to the Secretary on that day.

Q. Do you know where it was made?

A. I imagine it was made at Annapolis, as he was sta-
59 tioned there. He told me at the time that he made the most of it himself.

Q. Did he at the same time have drawings of the device?

A. No; he only presented the model.

Q. Was that before or after you first saw the Seabury model?

A. I do not know, to tell the truth. I think it was considerably before, but I am uncertain about that, because the Seabury matter did not occur to me as a very serious transaction at the time, and I did not fix it in my mind. I remember the Seabury matter distinctly, when he and his friend came there on one occasion, certainly; but I am uncertain now as to just when that was. I have had so much else to do that I did not pay much attention to details in these matters.

Q. Are you able to say whether the Seabury model or the Dashiell model was the first that you saw?

A. The Seabury matter came to me long after I first heard of the Dashiell matter, because the Seabury matter came to me when I was at the bureau.

Q. I am speaking now only of the model?

A. As to that, my impression is that the model came to me before, although I am really very doubtful about it.

By Mr. PHILLIPS:

Q. What model?

A. The Dashiell model.

By Mr. WILSON:

Q. Had you previously to seeing either of these seen any model of a mechanism which unlocked, withdrew and threw open the screw-block by handling a single lever?

A. I have seen the Canet device, which does all of those things, and have seen many drawings of the Canet device. I had heard a number of years before of the Vavasour device, of a conical breech plug.

Q. You mean that which is made by the Armstrong Company?

A. Yes; that is made by the Armstrong Company. There have been a number of devices of that kind, I think, prior to either of these, because it was by no means a new thought to me, to open it by one movement; but I wanted to do that with an American in-
vention.

60 Q. I suppose a great many had been striving after the same end?

A. Yes.

Q. The art had reached that state when the same idea would naturally occur to a great many. I do not mean the same mode of accomplishing it would occur to them, but the same purpose to be accomplished?

A. The desire to do it was universal all over the world. A gre many people were trying to do that.

Q. Before the time when you saw either the Seabury or the Dashiell model had you seen the model of the Canet device?

A. Not his model.

Q. Had you seen it in a gun?

A. I had seen both the Canet and the Vavasour in Europe. I have seen a Canet gun in Canet's office, in Paris. I was stationed abroad in 1887 and 1888, and I saw that gun in his own office in Paris.

Q. Which Canet device was that?

A. It was one which opened with one movement.

Q. Was it one that opened with a lever or one that opened with a gearing?

A. It was one that opened with a lever.

Q. You are quite sure of that?

A. Yes, sir.

Q. Was it patented as early as that?

A. I think so. At least, I saw a Canet device in his office, in Paris, that opened with one movement. You see, these things happened a long time ago, and I do not pretend to recollect exactly about them.

Q. You are familiar with the two Canet devices?

A. I know that he has two; yes.

Q. They are quite different in their construction, are they not?

A. Yes. It is necessary that they should be, as one is intended for a very heavy weight, and the other for a light weight.

Q. The one for heavy guns withdraws the breech block by teeth interlocking with the threads of the interrupted screw, does it not?

A. Yes; I believe so.

Q. And the other one withdraws it by a pin at the rear of the centre of the breech block——

A. I would not attempt to describe it.

61 Q. Which of these devices do you think it is that is similar to the Seabury and Dashiell devices?

A. I should think it was the lever device that was more similar than the other.

Q. That was the later one of the two?

A. That was possibly the later, but the relative dates of the two devices I do not remember.

Q. Is it not probable that the one you saw in Paris was the earlier one—for heavy guns—first introduced?

A. No; I think not. Canet knew that I was very much interested in all of these things, and he wanted to get them adopted in America. He showed me all that he had. I saw a device there which opened with one movement; it was for a small gun, and naturally would be operated by a lever, and not by a gearing, as would be the case were it a heavy block.

Q. Did he not show you the heavy-block mechanism?

A. Possibly; but I remember the other, however.

Q. Was not this heavy-block mechanism made with a small gun, in order to show it with the effect of a model?

A. No; we would quickly know whether it was intended for a large gun or a small one, whether the model was large or small.

Q. Then, you think he showed you his small-gun lever device, and did not show you his heavy-gun and prior device?

A. I think that he showed me the lever device that combined these features of opening in one movement. As to whether he showed me two devices at that time, I do not know. I could not state positively about that.

Q. You cannot recall now the precise mode in which it worked?

A. No, I cannot. The subject of opening a breech block with one movement was an old story to me, and I had heard of it in very many different directions before I supposed Seabury or Dashiell were going to do anything of the kind, so that I would not fix in my mind an occurrence of that sort. I may have heard of it fifty times in fifty different directions, as it was a thing I was after myself for — own service.

Q. I would rather you would state how many times you did see it than how many times you might have seen or heard of it.

A. I would be delighted to do it, but I am afraid I would not be able to fix it exactly.

62 Q. At the time you saw the Seabury model, it did not occur to you that you had already seen Dashiell's model for accomplishing the same thing?

A. It might have occurred to me.

Q. You cannot recollect now whether it did or not.

A. I cannot recollect whether it did or not. It seems to me, though, that I ought to have recollected it. Perhaps you can tell me the date that he brought the model there.

Q. The time of which I speak was some time in the month of May, 1890, as I am informed.

A. Mr. Dashiell's testimony will probably fix the date more definitely than mine.

Q. I am only asking for your recollection.

A. I did not bother myself much with the details. I work on a general principle, and some one else works out the questions of details. At that time I was very busy and I do not think I fixed in my mind the date. I should like to know at the present moment, for my own edification, whether Dashiell or Seabury came first with his model; but I really do not know.

Q. You do recollect the fact, however, that you saw both models?

A. Yes; I saw Dashiell's model. I had forgotten about Seabury's model. I have not tried to refresh my mind on this matter, except this morning, when I read over a description of the sequence of events. I had forgotten, until you spoke of it a moment ago, that Seabury did bring a model. I assure you I have not seen either Seabury's drawings or his model, although the drawings were filed—as I understand and know—in the Bureau of Ordnance. I have not looked at either of them since the time of his coming there. I have not seen them, and have not asked for them.

Q. Do you remember the fact that when Mr. Seabury presented

the model for your notice, he had with him also original drawings, showing the same device for a four-inch gun?

A. Yes; he had drawings with him, and I think very likely it was a four-inch gun.

Q. You did look at them at the time?

A. I looked at everything he had.

Q. Sufficient to observe the character and mode of operation of the mechanism?

A. In a general, cursory way.

Q. Do you know the fact that subsequently drawings were received by your bureau from Seabury? When I say drawings, I should say blue prints from original drawings, showing a four-inch gun.

63

A. Yes. I will not state as to the caliber; but I think I remember that there were other drawings received.

Q. I show you these drawings, and ask you if they came from the files of your office in the Bureau of Ordnance (handing witness the drawings).

A. Yes; these are our drawings. This is our method of stamping them. The date is June 4, 1890.

Q. That is, they were received and placed on file in your office on the 4th of June, 1890?

A. Yes, sir.

Q. These are the original receipt marks on the back of the drawings?

A. Yes.

Counsel thereupon exhibits to the witness three sheets of blue-print drawings, entitled Four-inch B. L. rifled Seabury breech mechanism, sheets No. 1, 2 and 3.

Q. When did you first see these after their receipt in your office?

A. They are usually brought to me. The mail is laid on my desk, and I look at everything. I suppose I saw them that day, when they were received.

Q. Did you give any instructions in regard to them?

A. To be filed—that was all.

Q. Have you, since that time, given any directions in regard to them?

A. I have never thought of them from that day to the time the racket began about them.

Q. Do you know what use, if any, has been made of them from that time?

A. They cannot be taken from the file without my permission. That is the order.

Q. They can be taken within the limits of the bureau without your order?

A. Yes; by any of the assistants of the bureau.

Q. I ask you, from the appearance of them, whether you would say they had been handled since they were received.

A. I don't know about that. Their condition might have arisen

from the condition they were in before they were received. As to whether they have been handled since they were printed, I say yes.

Q. They have been handled a good deal, have they not?

64 A. Yes; but as to when they were handled, as to time and place, I should be very doubtful.

Q. In fact, they show signs of wear, do they not?

A. Yes; but they may have been worn before they were sent to us.

Q. If they were entirely fresh when they came to you, it would indicate that they had been used a good deal in your office?

A. They would indicate that they had been used, if they were fresh when they came to me, unless means were taken to crump them up.

Q. They have remained since then in the files of your office?

A. No; you have just received them this morning.

Q. They were just handed to me by Mr. Stayton, accompanying Mr. Dashiell, who, I believe, brought them from the Bureau of Ordnance.

A. Yes; I think that is very likely true.

Q. I understood you to say that they had not been permitted to go out of the possession of your bureau.

A. I have given no permission for them to go out, and I do not imagine that they have been taken out.

Q. Did you not say they could not go out without your permission?

A. They cannot go out properly without my permission.

Q. Can you give any explanation of the pin-holes that appear on sheet No. 1?

A. I cannot. I have had nothing to do with them.

Q. You see such pin-holes there?

A. I see there are holes there. There are more or less pin-holes in all of the sheets.

Q. How are those ordinarily made in such drawings?

A. Pin-holes are not supposed to be made in the drawings. If you are going to trace a drawing, it would not be done by means of making pin-holes in them like children do in school. They put pin-holes in the corners, and lay the tracing paper over it.

Q. How did the pin-holes happen to be in these drawings?

A. They occur in taking dimensions, &c.

Q. That is by the points of the dividers?

A. By the points of the dividers.

Q. When did you first see any drawings of the Dashiell device for handling the screw-block?

65 A. I think in a drawing for the Secretary's report, in the fall of 1890. It is very likely that I saw and approved detailed drawings between the summer of 1890 and the fall of 1890. I must have done so, because they cannot manufacture a mechanism at the Washington yard unless I have my signature on it. I recollect that there was a picture of the device put in the Secretary's report of 1890, or, at any rate, it was the intention to put it there. If it is not there, there was a change in the intention. I

must have seen the drawings of the Dashiell mechanism during that summer, and approved of them, for their manufacture; but I do not remember specifically the date at which I had these drawings brought to me.

Q. Were those drawings entirely similar to the mechanism shown by the model you had already seen?

A. They were, in principle, undoubtedly.

Q. Were they in detail, or were the details modified?

A. A thing that always grows——

Q. I am asking you about this particular one.

A. I do not know about that. I fancy they were changed.

Q. Were those drawings made in your bureau?

A. The detail drawings are usually made at the yard. The general drawings are made at the bureau.

Q. And by bureau draughtsmen, at both places?

A. Yes, sir.

Q. The drawings of which you speak then were made by some of these draughtsmen from original sketches furnished by Dashiell?

A. Yes; they are usually made from original sketches of the designer.

Q. Your report for the year 1890 speaks of the invention of Dashiell, does it not?

A. It probably does.

Q. And refers to the delineation of it which will be figured in the appendix. Is not that the fact?

A. Possibly it is. I have not read it since 1890.

Q. Was it figured in the appendix?

A. If I said so I trust it was, because that was the intention.

Q. If it was not what was the reason?

A. Probably because the Secretary would not approve of making any drawings or something of that sort.

Q. If that is not the case then what would be the explanation?

A. I do not know whether there could be any explanation
66 of it. It would not amount to anything deep or mysterious.

Q. How many times were Dashiell's drawings changed before that type was generally adopted which took form in the first breech mechanism actually applied to guns by your bureau?

A. I have no idea. I did not pay any attention to these details.

Q. Did you not have something to say about it?

A. I authorized all changes; but as I have about 5,000 drawings going all the time, I cannot follow them all. If I had known there was to be a controversy, probably it would have fixed it in my mind.

Q. Then no changes were made without your authority?

A. No changes are ever made without my authority.

Q. Were changes made upon your suggestion?

A. They may be made at my suggestion. They frequently are.

Q. I am asking about this particular case?

A. I do not remember whether I made any changes or not. I may and may not have done so.

Q. Did you not, in point of fact, suggest various changes?

A. No; not in the Dashiell mechanism. That is a thing that I had confidence he would work out to my satisfaction better himself than he would by any advice from me.

Q. Was he an assistant in your bureau?

A. No; he was stationed at the proving ground at Annapolis.

Q. Was he an assistant in your bureau any part of the time while you were chief of bureau?

A. No; never since I have been chief of bureau.

Q. When was the application first made for the Dashiell patent?

A. I have no definite idea.

Q. Did you know anything about it at the time?

A. I advised him to take out a patent.

Q. When did you do that?

A. In 1890. I counseled him to take out a patent. I thought it was a good thing for him to do, as it was, in my opinion, an original departure.

Q. A departure from what?

A. An original idea, we will say.

Q. What did you regard as the feature of originality in it?

A. It was different from anything I had seen before, in general.

67 Q. Different from the Canet?

A. It was prompter in its action than the Canet. It was somewhat more powerful than the Canet, and its extraction was, as I thought, better than the Canet.

Q. You considered it to be considerably different from the Canet?

A. I considered it substantially an original idea, and I thought it would be advantageous to us to have an American idea.

Q. If you considered it an original idea, you considered it substantially different from the Canet; is not that the fact?

A. Yes; if the Patent Office should decide that it was sufficiently original to award a patent on it, I would be satisfied to go on with it.

Q. You were aware, at that time, that Seabury's invention had already been patented?

A. I was aware that there was a similarity between them, but I did not know any more about the Seabury patent than about the other.

Q. You knew the Seabury invention had been patented at the time you first saw the model of the Seabury invention?

A. I suppose I knew it.

Q. Do you not make it your business, as chief of the bureau of ordinance, to keep yourself informed as to the issuance of patents in the matter of guns?

A. We received notice of patents, and of all patents that are filed in the American office. That is to say, there are instructions at the Patent Office to furnish us with them, in a general way, and specifically with regard to certain things, and they keep us pretty well posted as to what is being done. I probably knew at the time Seabury presented his model that he had a patent.

Q. Then, if his patent had been issued some time prior to that, you must have known it in the course of business?

A. That is probably true; yes, sir.

Q. Did it strike you that the Dashiell design was original, in that it was substantially different from the Seabury design?

A. I did not bother much about the two. As I told you a moment ago, I never looked at the Seabury drawings or model after Mr. Seabury presented himself there. I made no study of them whatever. I went largely on this principle, that if the Pat-
68 ent Office, which was paid for making validity searches, and things of that sort, had satisfied itself of the originality of the idea, I had nothing further to do with it, and did not care.

Q. You said a few moments ago that it was your desire to have an American device that would perform this function of rapidly opening the breech.

A. Yes; in the best manner possible.

Q. And was it not present to your mind that the Seabury device already patented, accomplished that, and was an American device?

A. Yes; but not so well. The impression in my mind at the time was that it did not accomplish it so well. I remember of this expression being used at the bureau at the time with reference to Seabury's device. The term applied to a complicated mechanism is a "clock;" and I remember somebody said at the time of the presentation of the Seabury device that it was a sort of clock; in other words, that it was somewhat complicated. I remember that the impression produced upon me by the Dashiell device was that it was less complicated. That, together with the issuance of the Dashiell patent, or the prospective issuance of it, was probably the cause of any action in taking it.

Q. You did consider the question, to some extent, as to whether the Dashiell device was an infringement on the Seabury device?

A. It possibly may have occurred to me.

Q. Did it not occur to you?

A. I think it is very possible it did.

Q. Is it not more than possible? Is it not your present recollection now that you did think of it?

A. Not as a definite and specific fact. The decision of the Patent Office, I thought, rather cleared the atmosphere so far as I was concerned.

Q. What was there in the atmosphere to clear up?

A. There was the Canet device, and all that had been done before, and the desire that the bureau should not have a fight on its hands.

Q. Did you request any opinion or decision from any of the Patent Office officials upon that point?

A. Not at that time. I never did on Dashiell's matter. I did, on another matter, however.

Q. Did you see Dashiell's drawings and application as presented for a patent?

A. No; I did not see it at all. In fact, in order to pre-

serve to himself the right to receive a royalty from the
69 United States, if it was decided to give him a royalty, he showed me nothing about his patent claims or his patent drawings, prior to his appplication for a patent. He very wisely did that, without consultation with me in regard to it, and I was subsequently very glad that he had done it. He took what measures he could leading to the issuance of the patent without consultation with me and without advice from me as to modifications or details, and secured his own patent in his own way, in order that his claim for a royalty subsequently might be perfectly clear; because, the rule, as I understand it, as decided by the Attorney General and by the Supreme Court, is that if he receives assistance or pay or the Government develops his idea for him, prior to the main principle being established, he cannot receive a royalty. He did not do anything that would invalidate his possible subsequent claim for a royalty.

Q. That is, he did not in your judgment?

A. So far as I am able to judge.

Q. Were any obstacles developed in the way of his obtaining a patent as originally applied for?

A. I have no knowledge of any of the proceedings in the Patent Office.

Q. There was no conference with you at any time between the application for a patent and the issuance of it?

A. None whatever, as I recollect.

Q. And in the meanwhile your bureau proceeded to manufacture this device?

A. That is just what we did, because we were in a great hurry.

Q. How many of these devices have been completed or are in process of construction in your department?

A. I do not know that. We can find it out if it is necessary.

Q. As many as fifty?

A. Yes.

Q. As many as a hundred?

A. I do not know whether we have gotten up to a hundred or not. My annual report states it, but I do not know now.

Q. You would say somewhere between fifty and a hundred?

A. Possibly more and possibly less.

Q. Was there a time when work was suspended at the navy-yard shop?

A. No, sir; not that I know of. I do not recollect that we ever held it up. Do you mean on account of this interference?

70 Q. I ask simply whether there was a time when work was stopped for a while?

A. I think not.

Q. Is it not a fact that for several weeks, and even months, that work was suspended?

A. On the Dashiell block?

Q. Yes.

A. I think not. I do not remember at this moment.

Q. You would not be positive that it was not?

A. I am rather positive that it was not. I have never cared enough about this thing as to have taken so serious an interest in it as to recollect all the details. I was away for a month during the summer, but I think I would have known it if it had been stopped. That would indicate that we were rattled, and we were not at all.

Q. This is your letter, I suppose (handing witness a letter)?

A. That is my signature and my letter.

Mr. WILSON: I offer this letter in evidence.

The above-mentioned letter is here offered in evidence on behalf of the complainant-, and the same is filed herewith and marked "Exhibit W. M. F. No. 1."

Q. Is this also your letter? I show you a paper already marked "Complainants' Exhibit Letter No. 1, S. A. B., commissioner."

A. Yes; and that is my signature.

Q. At the time the Seabury model was shown to you first, did your bureau have any rapid-fire device before it for consideration?

A. The Driggs and the Hotchkiss device were adopted in Europe, and we did not know but what we might have to take that. I did not want a block that moved up and down, if I could help it, and I was looking for something else Sicard had rather believed that the Driggs block might be applied to a four-inch gun.

Q. Sicard was your predecessor as chief of bureau?

A. Yes, sir.

Q. At that time the question of adopting the Driggs device was more or less undecided?

A. Entirely undecided; it was never decided to adopt it, and it has not yet been adopted.

Q. And with the exception of that, there was no device that was actually under formal consideration, was there?

71 A. Admitting that I had not seen the Dashiell block, which I am not quite certain about, there was none other.

Q. Then if you had not already seen the Dashiell model, there was nothing before your bureau except the Driggs-Schroeder device?

A. Nothing except the Canet, the Hotchkiss and the Driggs-Schroeder. I had only been in the bureau a little while, and was of course looking around very interestedly and seriously as to where I was going to settle. It was a matter involving a good deal of money, and I was taking up for consideration anything that came along in that line, and, to that extent, I did take up the Seabury, but never with a view to committing myself to any extent.

Q. If you had already seen the Dashiell device, you did not mention that fact to Seabury?

A. I would not have been apt to mention it. I will tell you one thing which may be of interest to you. Mr. Seabury has taken out a great many patents, and has been several times offered duty in the Bureau of Ordnance. He has always declined it. If some other device had come before me, as chief of bureau, my sympathetic consideration would be with the other naturally, if the

merits of the other device at all made such a decision justifiable, on account of Mr. Seabury never having been willing to work in the Bureau of Ordnance.

Q. When was he ever offered an assignment to that bureau?

A. He was offered it in Sicard's time, and he was offered it in my time. It seems to me that I offered him a position before I became chief of bureau. I think I suggested his going into the Ordnance Bureau. I remember suggesting a great many times, when he was aid to Admiral Porter here, that he should do so, but he never did. He is always inventing, and is a man of a good many ideas.

Q. Do you mean to say that you ever actually offered Lieutenant Seabury a position in your bureau?

A. I suggested it.

Q. Did you ever offer it?

A. No; I made no particular offer, but I suggested to him it was a great pity he was not in the Bureau of Ordnance, because he could make his talents of greater value.

Q. Is that the suggestion you refer to?

A. That is, possibly, the suggestion I referred to.

Q. With that exception did you ever offer or suggest to him that he should be detailed to your department?

72 A. Several times when I was on duty in the Ordnance Department, I can remember of speaking to him, and I can remember of having heard that Capt. Sicard had offered him duty there.

Q. Do you know of your own knowledge of Capt. Sicard's having made such an offer?

A. No; except that the matter was bureau talk.

Q. I am asking you for your personal knowledge. Bureau talk is not evidence.

A. I am giving you, however, my general impressions of this young man.

Q. I will limit you, for a moment, to your own knowledge. You have no personal knowledge of Capt. Sicard's ever having offered Seabury duty in the Ordnance Bureau?

A. Not beyond hearsay; no.

Q. You do not consider that personal knowledge, do you?

A. No.

Q. Limiting you in the same way to your personal knowledge, did you ever offer Lieutenant Seabury duty there, or suggest to him that he should be attached to your bureau, with the exception of the suggestion you made when he showed you his model of the breech mechanism?

A. No; probably not.

Q. And on that occasion did you not simply say: "You ought to have been attached to this bureau"?

A. Possibly. The suggestion was that it was a pity he was not on duty in the bureau.

Q. And for the reason that he was not, you would receive the device of any one else with more favor than his?

A. For the reason that, to my own knowledge, he has had a long

history of making inventions of war materials away from the Bureau of Ordnance, and in the matter of patents, which we deprecate as a rule.

Q. You did not deprecate it in Dashiell's case?

A. No, sir; because the services of Mr. Dashiell should be paid for.

Q. You advised it in Mr. Dashiell's case?

A. No; I gave no advice whatever.

Q. You recommended him to do it?

A. I told him I hoped he would take out a patent.

Q. You think he was wise and right in taking such a course?

A. Yes, sir; I say that certain officers have served the Government of the United States to such an extent that the Govern-
73 ment should pay them in one way or another. Their pay is not sufficient, and they cannot make any money in the service. When this officer, without order or instruction from me as to the evolution and development of a device, produces a thing which the Patent Office states is original in idea, and which is, in my opinion, different from and better than anything that has been presented to me, I say to that officer: "Take out a patent, because your services have been so good that you should receive some remuneration for them." That is the case here, and that is why this officer had my sympathetic consideration all through; but he has had only that, however.

Q. On principle, you are ordinarily prejudiced against an officer who takes out a patent for his invention?

A. On general principle, in the case of an officer who has not given services to the United States, I am opposed to their taking out a patent. I myself have never taken out a patent of any description, and I have probably been connected with the ordnance department more intimately than any other person in the navy at the present time, not excluding my predecessor. When an officer is not on duty it is quite another matter. When an officer is on duty, I deprecate his taking out a patent; but there are certain cases where an officer's services have been of such a nature that the Government cannot reward him. When his services have been very great and of a meritorious character, then I want to see him receive some remuneration, on general principles of equity. I tell you frankly, and it is only human, that I look upon the production of that officer with more sympathetic consideration than I do upon the production of an outsider and free-lance, who comes in for the pelf alone, for mere money-making business, without having given any previous service, remembering all the time that the interests of the Government are guarded by the adoption of the better device. I am thoroughly convinced Dashiell's is a better device. The Patent Office tells me it is an original one——

Q. In what way do they tell you that?

A. They grant him a patent on the mechanism.

Q. That is your construction of the patent?

A. That is my construction of the patent.

Q. This letter of yours, under date of September 29, 1890, which

was shown you a few moments ago (marked "Complainants' Exhibit Letter No. 1, S. A. B.") and addressed to Lieutenant Seabury, contains this language: "While recognizing the merits of your design, the bureau has other designs developed by its assistants,
74 which it considers superior in some respects." What other designs did you refer to in that expression?

A. To Mr. Dashiell's.

Q. To how many designs of Dashiell's did you refer?

A. That is merely a form of expression.

Q. Although you used the plural, you meant it in the singular?

A. I may have done so.

Q. What is the fact?

A. I do not know. People write letters for all sorts of purposes. I may have had knowledge of other designs than Dashiell's. I do not know whether I did or not, but I probably had Dashiell's design in my mind at the time.

Q. You did not design to convey an erroneous impression?

A. I did not design to convey an erroneous impression.

Q. You used this expression in regard to the Seabury device, "your design," and in regard to the Dashiell device you used the words "other designs." Why did you use the singular in one place and the plural in the other?

A. I do not remember.

Q. Can you give any explanation of it now?

A. No. I may have had something else in my mind besides the Dashiell device; but I particularly, however, referred to Dashiell.

Q. Were there any other designs under consideration which you considered superior to Seabury's except Dashiell's?

A. I do not remember now whether there were or not.

Q. Did you have any other device before you for handling a slotted screw with rapid-fire mechanism?

A. Canet's was before us in a general way, and I believe there is one design in the army that opens with one movement which had been gotten out at that time.

Q. Whose invention is that?

A. I do not know whose it is.

Q. I am speaking now as to the date of September 29, 1890.

A. I will tell you now specifically that I may have had in my mind the intention of producing on that young man's mind the idea that I had more than one string to my bow. You understand that in writing letters as people write letters it is very probable that I may have used the plural designedly at that time, but I specifically had in my mind the Dashiell mechanism.

75 Q. You thought you might produce that impression upon Seabury's mind—that you had two strings to your bow when you only had one?

A. Possibly.

Q. Let me call your attention to this letter. The words are "other designs" developed by its assistants. Does that refer to Dashiell?

A. Specifically, as I recollect now, it meant Mr. Dashiell more than any other. I may have directed, and possibly I had at that time

directed, Mr. Fletcher to look up the subject of rapid-fire mechanism.

Q. Would the word "developed" apply to such a case as that?

A. Yes, perfectly so.

Q. Do you not understand the word "developed" to be in the past tense?

A. If you will give me the sense in which it is used there I will tell you.

Q. I ask you if the word "developed" is not a word in the past tense.

A. I believe it is.

Q. Where it stands alone?

A. Yes.

Q. Then, when it stands alone, it speaks of something which has already been done; does it not?

A. I suppose so.

Q. Were there any other designs than Dashiell's that had, at that time, been developed by the assistants of your bureau?

A. It is possible that I might have had my assistants working at that time on some other design besides Dashiell's. The difficulty, however, as I remarked before, is, that I meant Mr. Dash-ell's design more than any other.

Q. You have no present recollection of the fact that there was any other design intended to be referred to in that, except the Dashiell design?

A. No; probably not.

Q. In what way was the Dashiell design developed by the assistants of your bureau on September 29th, 1890?

A. He is an assistant in the bureau, in that he is under the control of the bureau, although not actually detailed for duty in the bureau.

Q. Who is?

A. Dashiell.

76 Q. How many people do you count Dashiell?

A. He is but one.

Q. What do you mean by the word "assistants" in the plural?

A. That is used in the same way. I will repeat to you a remark I made a moment ago. Desiring to produce the impression on this young man that I possibly might have more strings to my bow, and in order to close off the communication with him more definitely than I would by simply stating it in the singular, I may have worded my letter in that way. As to my actual intention at that time, five years ago, I am not now quite certain.

Q. By "this young man" in the last answer, you mean Lieutenant Seabury?

A. Yes, sir.

Q. Do you know his age?

A. No; but he is pretty nearly as old as I am, I fancy. He is young in the sense of the naval expression.

Q. Did any of the assistants in your bureau have anything to do with developing Dashiell's device?

A. None of my assistants specifically stationed in the bureau or elsewhere had anything to do with the development of Dashiell's device. But I consider that my assistants in Hartford, and my assistants in Wilmington, Delaware, and my assistants in fifty other places are all, for general purposes, and for labor of a general character, assistants of the bureau.

Q. Did they have anything to do with the developments of Dashiell's device?

A. I do not know of anybody but Dashiell working on it at all.

Q. At the time of this letter, September 29th, 1890, had you decided to adopt the Dashiell device?

A. I had decided to adopt it for trial, probably, at that time. It was sufficiently advantageous for me to adopt it for trial; but such a thing as that is rarely adopted until after it has had a year of test.

Q. At the date of this letter, had the Dashiell device been completely matured and developed?

A. Nothing is completely matured and developed of that description. It will probably go on improving for three years from the time of its original inception.

Q. Was it so far matured and developed as to leave it in a condition for you to begin the work of constructing such a breech block and applying it to one of the guns?

A. Yes.

77 Q. Had it reached that stage of development?

A. It must have reached that stage when I wrote that letter, or I should not have written it.

Q. There is always a possibility of improvement in any device as to the practical working of it?

A. Yes; there is rarely one that does not continue to improve.

Q. Between the time of this letter, September 29, 1890, and the present time, there have been further developments in the Dashiell device?

A. Yes; in minor improvements. The principle is the same; but minor improvements are constantly going on.

Q. I show you a copy of the Dashiell patent with the drawings attached, and ask if you can point out any difference between those drawings and the structure of the Dashiell model as you first saw it?

A. No; I could not do so, to save my life.

Q. Can you say whether there is a difference or not?

A. I cannot; because I do not remember. I do not pay much attention to the details.

Q. How do you ascertain the merits of such things without paying attention to details?

A. I look into the general principle, and I know enough about mechanism to decide promptly, on a cursory glance, as to the general principles, and as to whether there is promise in the device or not. As to studying out the intricacies of every mechanism that comes to me, I would have to have a great many more hours in the day than there are to do it.

Q. In other words, your mind is so trained on that subject that you can take in the principles and salient features in a very short time; can you not?

A. I think I can say, without vanity, that I can decide quickly, having seen a great many mechanisms before. If there is any novel, advantageous or meritorious feature about a mechanism, I can decide quickly with reference to it; but as to my going into exactly the details as to every screw or nut or worm gear, or something of that kind, and working it out as the man who makes it would—I do not do that. I could not tell now what improvements have been made by looking at the present Dashiell device, over the original, because I do not care for those things. I have too much to do.

78 Q. Without going into details, I ask you if the original model was substantially in the same form shown by figures 1 and 2 upon this copy of the Dashiell patent No. 468,331?

A. Substantially, in principle, I should say that it was.

Q. Did it have the handle and lever marked 15 and 14 in the same position, or substantially the same position, as applied to the gun?

A. Yes; I fancy it did, so far as I recollect. I have not looked at the drawings for a long time. It was substantially in the same position.

Q. I am not asking as to the correspondence between the patent and the guns that it was applied to, but the correspondence between the patent drawings and his model which you saw?

A. I do not remember about that with any certainty.

Q. Is that model in existence?

A. I do not know that. I have not seen it for years.

Q. Did you handle the model?

A. Yes; I took it up and showed it to the Secretary, the first time I ever saw it.

Q. You opened it, closed it, and saw how it worked?

A. Yes; and the Secretary opened it and closed it.

Q. You saw how it worked?

A. Yes, sir.

Q. That was Secretary Tracy.

A. Secretary Tracy. We were both very much pleased and delighted with the simplicity of it. The simplicity and novelty of the device was as marked at that time, over the Seabury mechanism, as anything in the world. I do not remember any of the details about the Seabury mechanism; but there was a general impression given of complication, number of parts, and clockiness about it.

Q. At the time you wrote this letter of September 29, 1890, you had seen the Dashiell model?

A. Yes; at that time I had seen it. I think that letter indicates it.

Q. And I presume you have seen the Dashiell drawings and designs?

A. Yes.

Q. With the view to the application of the mechanism to an actual gun?

A. With a view to the manufacture of the actual mechanism at the yard.

Q. What reason did you have for not stating that the Dashiell device was the one you referred you?

79 A. Because it was not material. I want to tell you another reason which affected me at that time. There was a general talk about price with Mr. Seabury. His price was $250 for each mechanism. Mr. Dashiell's royalty, if one could be allowed, was to be $125 each, just one-half of that amount. That was another reason, probably, that made me act in this way.

Q. How did Dashiell's price come to be fixed at that sum?

A. I suppose he heard the other price, and said that he would do it for half the money.

Q. How did he hear of the other?

A. There is a contract on file, probably at the Interior Department, with the Driggs folks for $250 each, made by Capt. Sicard, and Mr. Dashiell had probably found out what that was. It was in the line of that amount that Mr. Seabury proposed $250 each. He probably learned of it in the same way. He may have learned of it from me.

Q. Is it not a fact that he did learn of it from you?

A. Very possibly.

Q. Did you not send out and get the contract while Seabury was at your office to see whether that was the sum?

A. Very possibly. I do not remember about that.

Q. At that time you did not make any objection to the figure in your talk with Seabury?

A. Our talk was of a general character.

Q. Did you make any objection to that figure as being unreasonable?

A. I may have, and I may not have made any objection. I do not remember.

Q. You do not remember that you did?

A. No.

Q. When was the contract made between your bureau or the Navy Department and Dashiell for a royalty to him?

A. That was probably made in the latter part of the year 1890. I do not remember the date.

Q. Was it brought about through your interposition?

A. Yes.

Q. Did you propose it to the Secretary?

A. Yes; I have to propose these things before they can be approved.

Q. Did you propose it to Dashiell?

A. I think probably he proposed that price to me.

Q. Did you not propose the matter of a contract to him?

A. He has to have a contract or he never could get any royalty.

80 Q. In fact, did you not propose it to him?

A. Possibly I did. I suppose so.

Q. You suppose you did?

A. I think it is likely.

Q. When was that?

A. It may have been in 1890, before we actually began the mechanism. It would probably have been at that time. You must recollect that you are talking about something the details of which are all present to your mind, and you are recalling something to me which did not produce any serious impression on my mind, because I did not expect any row in regard to the matter. It was in the natural and ordinary course of business that we did these things. We are doing them all the time. Our memory is somewhat defective because we have so many of these things to do. I have no doubt a great many people could bring me up and say: Did you not do so and so, and I would be unable to tell exactly about it. I have to depend on our correspondence and files to tell, so far as may be, exactly what occurred. This is but one thing in five hundred that I am doing in the way of appropriating mechanisms in various directions.

Q. What do you mean by the word "appropriate"?

A. Acquiring for the benefit of the United States as far as possible.

Q. And with as little pay as possible?

A. Just as little pay as possible every time.

Q. And you say this is one of five hundred such cases?

A. It is, probably, one of five hundred such cases in which I have had to consider the drawings, but I have not taken that many of them perhaps since I have been chief of the bureau. I should say, however, that I have considered at least five hundred.

Q. If you have the disadvantage of having a great many transactions in your mind you certainly have the advantage of having been a party to them and thereby having an opportunity of acquiring personal knowledge of them, have you not?

A. Yes; but they come and go so rapidly that it is a very difficult matter to recall the details, dates and features of each, years afterwards. I cannot keep the details in my mind. I could not describe the Seabury mechanism, if you asked me, to save my life. I never looked at it after these visits to me.

Q. Do you mean that your recollection is poor in regard to this transaction generally?

81 A. No; not as to this transaction. It is poor in regard to all transactions of that nature.

Q. How is it in regard to this particular transaction? If you recollect this clearly, it is entirely immaterial whether you recollect the other matters or not. Do you recollect this transaction clearly?

A. You must have observed that my recollection is quite cloudy about dates.

Q. You wish to be so understood now?

A. Perfectly so.

Q. Can you or can you not state whether it was in 1890 that the contract was made with Dashiell?

A. No; I cannot state. I do not know that it was not 1891 before me made the contract.

Q. Was it made as early as 1891?

A. I had asked the Attorney General whether I could give him a royalty.

Q. Was it as early as 1891?

A. I could not say.

Q. Did you apply first to the Judge Advocate General for an opinion?

A. I think the sequence of the events was to ask the Secretary of the Navy to have the Judge Advocate General ask the Attorney General.

Q. Had the Judge Advocate General previously rendered an opinion?

A. I do not remember. I am not certain whether he did or not. I do not think he did, because he did not know anything about these things. We did not have much confidence in his opinion, and I probably asked to have the Attorney General decide as to whether we could pay a royalty under the circumstances.

Q. Did you never make distinct inquiry of any one as to whether the Dashiell device could be regarded as an infringement on the Seabury patent?

A. No; I do not remember of ever asking any one for such an opinion.

Q. Did you not ask the question on one occasion in the room adjoining the room of the chief clerk of your bureau when Lieutenant Fletcher was present?

A. I may or I may not. You know we talked casually about these things.

Q. Did you not then raise the question whether the Dashiell mechanism could be made safely without infringing Seabury patent?

82 A. It is possible I thought of that a great many times.

Q. Did you not ask that question?

A. I do not know whether I did or not.

Q. In the presence of Lieutenant Fletcher and others?

A. I do not know whether I did or not. It is very possible that I did. It was naturally the subject of conversation.

Q. Were you not told, in response, that it would be such an infringement in the opinion of that particular person, whoever he was?

A. No; I do not remember of ever having heard that. I am perfectly ready to state that neither Mr. Fletcher nor any one else has ever expressed a definite, positive opinion that the Dashiell mechanism was an infringement. I have never had such an opinion except from Mr. Seabury. I have never had a distinct, positive opinion that the Seabury mechanism was an infringement of the Dashiell, or *vice versa*.

Q. You mean you have never had that opinion expressed to you by anybody?

A. Yes.

Q. You are absolutely positive about that?

A. Yes; I am absolutely positive about that.

Q. Are you equally positive that you never said you would use the Dashiell, whether it was an infringement or not?

A. I am absolutely certain that I never have said any such thing.

Q. If I understand you aright, you took no advice as to whether the making of the Dashiell mechanism would be an infringement of the Seabury patent any further than as you have, yourself, interpreted the patent issued to Dashiell?

A. No; I never took any advice on that subject. I went right ahead and made it. If there is an infringement, there is a recourse to the Court of Claims to settle it.

Q. Then you did not trouble yourself particularly about questions of infringement?

A. I do not, as a matter of fact. I advised Dashiell, and advised the Secretary of the Navy, in our conversation, to let it go before the courts to be settled; that I did not care anything about it, and was not going to look into it myself; that I would rather have it go before the courts than not. I remember of Dashiell saying to me, that he preferred that this thing should go to the courts and be settled in that way.

Q. What time are you now speaking of?

83 A. I am talking about the time that Seabury first made his objection to Dashiell getting the royalty. Dashiell has never received a penny of royalty on his invention yet, the Secretary having stopped it pending this case. That was when the Seabury people first began to write letters to the Secretary of the Navy.

Q. Then it is your policy to make whatever you please, in your department, and leave any one whose patent may be infringed to resort to the Court of Claims?

A. No; you are inventing a course of conduct which we do not pursue.

Q. That is the course you pursued in this case?

A. No; let me state it as I want to state it. My plan in this case was to urge the Secretary of the Navy to let us go on and make the mechanism, and let the law courts decide the question of infringement; that they would have recourse for their rights, if they had any, in the Court of Claims. That is a very fine thing for you to suggest to me to say, but that is not my principle.

Q. I understood you to say that you did not concern yourselves about questions of infringement?

A. In this particular case I did not take time to look into it, because I was perfectly convinced that there was no infringement, so far as my own somewhat uninformed judgment was concerned.

Q. When were the first drawings made of the Dashiell mechanism in your bureau?

A. They were probably made somewhere near the date of that letter. The general drawings would be made in the bureau, and then they are sent to the yard for detailed drawings of the parts. They were probably made in the fall of 1890, although I do not

remember anything very definitely about them. The letter fixes it somewhere in my mind, because after I came to a decision I wrote that letter. The decision was arrived at after a consideration of the drawings or of the designs.

Q. Do you remember the fact that the Dashiell patent was not issued until February, 1892?

A. I had no knowledge of the details as to what occurred with regard to the issuance of the Dashiell patent, or anything that occurred during his efforts to obtain a patent. He confided nothing whatever to me on the subject. I counseled him nothing in regard to it, and knew nothing whatever about it, and cared less.

Q. When did you examine Dashiell's patent for the pur-
84 pose of forming your judgment as to how far that protected his manufactured device?

A. I did not examine it particularly. I was delighted with the model. I saw that it had less parts; that it was more powerful, and did the work better than anything that had been hitherto brought to my notice. His patent was probably put in the file on my desk, as sometimes there are a dozen of them laid there, but I, perhaps, did not read a line of it. The fact of his getting a patent was sufficient to clear the atmosphere for me, and permit me to go ahead. The United States Patent Office stated that there was an original idea there, and I went ahead on that.

Q. You went ahead on that?

A. I went ahead largely on that fact.

Q. Relying on that?

A. I probably had gone ahead before, but I felt confirmed in the justice of my course by the arrival of the patent. Probably I had been going ahead for months before that; and no doubt I had, because I supposed that Dashiell held his patent back on account of foreign patents, or something of that sort.

Q. That period is only for six months?

A. You mean as to holding back?

Q. Had you gone ahead prior to that six months?

A. I suppose so. I did not pay any attention to these dates.

Q. Then in what you did before you were informed that a patent had been allowed, you did not, of course, rely on the patent at all as protecting anybody against a claim of infringement?

A. No; I did not have time to wait. We are too hard pressed to get mechanism.

Q. Up to the allowance of the Dashiell patent you had no assurance whatever that the Dashiell mechanism might not be an infringement of Seabury's?

A. As to the question of infringement, it did not occur to me at all. It never came near me as a serious question.

Q. You have no recollection by which you can fix the date when you first knew of the allowance of the Dashiell patent?

A. No; I did not pay any attention to it, and did not care anything about it.

Q. I think you said a few moments ago that you did not read a line of the Dashiell patent?

85 A. I probably did not. I may have, but I do not recollect whether I read it or not.

Q. You relied on the fact that there was a patent?

A. Yes; that confirmed me in the justice of whatever course I may have taken up to the time, and I felt that we were out of the woods so far as there was any trouble on that subject, if I thought of it at all. That cleared up the atmosphere.

Q. What was it that, up to that time, had clouded the atmosphere and made you feel that you were in the woods?

A. There were a lot of people working on the general subject of mechanism of the general type of the Dashiell.

Q. Who else besides Dashiell?

A. I mean Dashiell and Seabury.

Cross-examination.

By Mr. PHILLIPS:

Q. Since you have been chief of ordnance, an unusual call has been made upon you to supply the service with rapid-fire guns of the breech-loading pattern?

A. There has been more than that. There has been a necessity that the batteries of these new vessels should be tested, and that a sufficient number should be manufactured to arm the ships as fast as they were completed. There was no time for delay. Decisions had to be made with the greatest rapidity, and we frequently ran some risks as to the ultimate outcome, as regards the efficiency of the design.

Q. Since you have been chief of ordnance, an unusual call has been made upon you to supply the service with rapid-fire breech-loading guns?

A. Yes; on account of the construction of a great many new naval vessels.

Q. As between the Seabury and Dashiell improvements, you regarded the latter as superior in regard to strength, simplicity and ease of operation?

A. That was my opinion at the time I decided to take the Dashiell mechanism instead of the Seabury.

Q. These qualities of strength, simplicity and ease of operation are first-rate qualities under the circumstances?

A. They are first-rate qualities for such a device.

Q. Any question of law as to the respective mechanisms you left to the decision of the Patent Office?

86 A. I left that to the decision of the law officers of the Patent Office.

Q. The element of preference for the invention of an officer who was an assistant to your office, and one who was not, was limited to cases where two inventions were otherwise of equal merit, and would not have influenced you to prefer an inferior mechanism?

A. No; the public service is guarded, and these mechanisms are adopted as the result of the action of a board of officers, and not by

the fiat of the chief of bureau. They are invariably adopted as the result of a report of the board.

Q. Such preference by you would be limited to a case in which the interests of the public were not concerned in any decision that you might make thereupon?

A. I would be guided by the public interest more than by anything else.

Q. You said in your examination-in-chief that, because Seabury had occupied certain relations to the office, you preferred, as between him and somebody else, the other person?

A. Yes; if the mechanisms were equal I should prefer somebody else, and if the other were superior I certainly should prefer that.

Q. You would not exercise that preference in a case where the interests of the public were concerned?

A. No, sir; the interest of the public is the first thing we have to guard, because we are checked by public opinion and by the subsequent performance of the mechanisms. If it is a good thing, it will work its way to the front in spite of decisions by the bureau.

Q. You regard the superio-ity of the Dashiell device over the Seabury clock, for the purposes of the service, as clearly appearing on the face of the drawings?

A. At the time of my decision I certainly so regarded it. I do not know how the Seabury device may look at this time.

Q. As between the two patents you regarded the Ordnance Bureau as entitled ordinarily to decide freely, without being liable to any charge of neglect of duty, and that the parties concerned have recourse to the law courts in order to establish their claims, if there be any?

A. As between two patents I consider that the Bureau of Ordnance have a perfect right to choose to suit itself. Of course, every man has recourse to the courts.

87 Q. You had some assurance, at the time you commenced the manufacture of the Dashiell gun, that the patent was to be issued?

A. I do not remember that I had any assurance of it. I supposed that it was a new thing, and that he would secure a patent upon it. I had no assurance that it was to be issued from any source whatever. I had paid very little attention to that. I wanted him to have a clear field, so that he could state that he had no assistance from the bureau in any manner in the development of the device.

Q. Were any Dashiell guns completed before his patent was issued?

A. I really do not know, but possibly there were.

Q. Had any been used?

A. No; not in service. There have been none used yet in the navy.

Q. Had any been proved?

A. They may have been fired down at the proving grounds.

Q. Before the patent was issued?

A. Before the issue of the patent. But I do not remember as to the relative dates at all.

Q. In regard to the letter in which you used the plural word "assistants"—do you recollect that Lieutenant Fletcher and Mr. Alger, both draughtsmen attached to your office, were, at the time of the date of that letter, developing breech-block mechanisms of this character?

A. It is very possible that they were. I used the word in the plural there, as I told you, to refer to the work being done in the bureau.

Q. You do not recollect of Mr. Alger working on that?

A. He has always had a great deal of work to do on breech mechanisms. He may have been working on it at that time, and he may not.

Q. You do not recollect about that?

A. No.

Q. The word "assistants" is used in regard to your office in two senses—one general and the other specific?

A. Yes.

Q. In the former sense Dashiell was an assistant, and in the latter he was not?

A. He was not employed in the bureau; but they are all my assistants. I give them work to do, and they assist me in carrying out my work, whether they are in the bureau itself, or stationed all over the country.

88 Q. Do you recollect saying anything on your examination-in-chief that as between the Seabury patent and the Dashiell mechanism, you regarded yourself at ease in your selection, because the Patent Office had passed upon the law?

A. I regarded that as *prima facie* evidence that it was a novel idea.

Q. As a matter of fact, you had made use of the Dashiell mechanism before it was patented?

A. Before the patent was issued. I took the chances on that. I could not wait to see whether he got a patent or not. We do not do business in that way. I trusted that he would get a patent, and I felt, of course, that the way was cleared up after he had the patent. A precisely similar case occurred recently, if you will allow me to state it.

Mr. WILSON: I object to the witness stating anything about a similar case.

(The WITNESS:) This is a very pertinent case. Mr. Maxim, a great inventor, came to me and stated that we were using an invention of his, and he would make us pay $500 apiece for every one of them we used. I was quite convinced that he was wrong. I had suggested to one of my assistants, previous to this statement of Mr. Maxim's, that he take out a patent to protect the United States. This is a case where the patentee gives the United States the use of his device. By a curious set of circumstances, Mr. Maxim arrived at the department, and made claim on the Secretary of the Navy that we were using his device; and I was enabled, by the arrival that morning from the Patent Office of a notice to Mr. Fletcher, to

meet his statement to the Secretary of the Navy and to present the paper, which cleared the atmosphere entirely. Mr. Maxim was knocked out of court and never made any claim whatever after that time. We are making, and have made, hundreds of the Fletcher mechanisms precisely in the same way.

Q. I understand you to say that all the time Mr. Seabury's blue prints were in your office you never gave permission to anybody to take them out of the office?

A. I never dreamed of their being out of the office until I saw in the newspapers that we had furnished this information. It had never been presented to my mind that such a thing was possible.

Q. Did you ever give any one leave to use them in the office?

89 A. I do not need to give my own assistants leave to use them. They can go to the bureau file and take anything out they want. I gave nobody permission to take them, and, in fact, I do not recollect of ever having given any permission about them.

Q. According to your present recollection, you have given no person permission to use them?

A. None whatever.

Q. You had me furnished with a wooden model of the Seabury device?

A. Yes; I ordered one made, but I never saw it.

Q. Do you know how that was constructed and whether it was constructed from blue prints or otherwise?

A. I do not know anything about it. I ordered the thing made, and this is the first time that I have ever seen it.

Q. You do not know anything about the construction of it?

A. No; I got a request from you, and gave the order to make it.

Redirect examination.

By Mr. WILSON:

Q. Did any board of the Navy Department pass upon the Dashiell device before it was applied to guns?

A. No.

Q. Has any board ever passed upon it?

A. Yes; since then.

Q. At what time?

A. I think two or three times, if I recollect right, they passed upon it, certainly in the six-inch size.

Q. Can you tell me about when the first board approved it?

A. If I recollect aright, it was about 18 months ago. I do not remember the date exactly.

Q. Who was on the board?

A. Captain Howell was the president of the board, and Commander J. E. Newell and Ensign Edward Simpson were members of it.

Q. What was the first work done by your bureau in the direction of constructing the breech mechanism of Dashiell?

A. Probably the first work done was the general drawings at the

Bureau of Ordnance, which are the drawings made before the detail drawings are made at the yard. After the detail drawings are made at the yard there are certain patterns to be made. That is the sequence of events.

90 Q. After the patterns are made then the work upon the actual mechanism is begun in the shops?

A. Yes, sir; from the detail drawings.

Q. When was that work first begun?

A. I do not know. I suppose it was probably begun just before I came to the conclusion stated in the letter. It was in the latter part of September, 1890.

Q. You mean that the actual work in the metal and in the shop of getting out the first mechanism was in the fall of 1890?

A. Yes; I think so.

Q. Were alterations found necessary in that work as it progressed, or did it work exactly according to the drawings, without change?

A. I never knew drawings to be exactly accurate, in my mechanism. There are always alterations. That is the universal experience.

Q. And such alterations as there were in this case were made in the shop at the navy yard?

A. They were made in the shop at the navy yard, if there were any minor alterations. There were no alterations involving the principle that were referred to me, that I recollect of now.

Q. When was that first mechanism completed?

A. I have not the slightest idea. I suppose it was early in 1891.

Q. Was it put upon a gun that was already otherwise finished?

A. Sometimes we put these things into a cast-iron model and work it back and forth. It may have been done in that way at first.

Q. I mean after it was found to work satisfactorily?

A. It would be put on a four-inch gun, and sent down to be fired.

Q. Upon a four-inch gun that was already otherwise completed?

A. Yes, sir.

Q. And only waited for the breech mechanism to complete the gun?

A. Yes, sir.

Q. And as soon as it was finished, therefore, it was sent to Indian Head for trial?

A. Yes. We had to wait a long time in order to get a case. We had nothing to test it with, no brass cases.

Q. You mean cartridge cases?

91 A. I mean cartridge cases. I think there was a long delay before we were able to do any work.

Q. This mechanism, then, was designed to be employed with metallic cartridge cases, or cartridge base?

A. Yes; a metallic cartridge case.

Q. As soon as that was obtained, the gun was fired at Annapolis?

A. The gun was fired at Annapolis.

Q. Was that some time during the year 1891?

A. I imagine it was; yes, sir.

Q. You would fix it as some time in the spring of 1891, at Annapolis, Maryland?

A. Yes.

Q. By whom was it proved?

A. By Lieutenant Commander Dayton, the officer in charge of the proving ground at Annapolis at that time. Dashiell had already gone to Indian Head, a new station.

Q. And after proving the gun, did you proceed to manufacture other similar breech mechanisms for additional guns?

A. There were long delays and long trials for that one gun. At that time we anticipated the rivalry of the Driggs mechanism, and that rivalry yet exists. There were questions, I recollect now, of preference between the Driggs and the Dashiell mechanism. Seabury was not in it at all. We never thought of him at that time. We thought he was out of the race. I remember that both these mechanisms were tried by Mr. Drayton. Mr. Dashiell knew nothing about it, being stationed at the other proving ground. That was probably in the spring of 1891.

Q. Did you ever report to Lieutenant Seabury that his device was objected to because you regarded it as too complicated?

A. Not except in the terms of that letter.

Q. You advised him nothing beyond what is contained in the letter of September 29, 1890?

A. Nothing that I remember of now.

Q. And never, otherwise than by that letter, did you point out to him any objections that you saw in his mechanism?

A. I do not remember anything of the kind.

WM. M. FOLGER.

92 Counsel for complainant- thereupon offered in evidence the drawings marked "Four-inch B. L. rifle breech mechanism, produced from the files of the Bureau of Ordnance, of a four-inch gun," and said drawings are marked by the examiner "W. H. S., No. 2."

And thereupon these depositions were closed on behalf of the complainant-.

WM. HERBERT SMITH,
Examiner in Chancery.

In the Circuit Court of the United States for the District of Maryland.

JAMES B. M. GROSVENOR and Others, Complainants,
against
ROBERT B. DASHIELL, Defendant.

Testimony taken on behalf of complainants before John H. Kitchen, one of the standing examiners of the United States circuit court for the southern district of New York, in accordance with the sixty-seventh rule in equity, as amended; testimony taken before said examiner by consent of the parties.

NEW YORK, *May* 12, 1893—10 o'clock a. m.

Parties met pursuant to notice at the office of the solicitor for the complainants, No. 48 Wall street, New York city.

Present: William G. Wilson, Esq., solicitor for complainants; Samuel F. Phillips, Esq., solicitor for defendant.

SAMUEL SEABURY, recalled on behalf of complainants, being duly sworn, testifies as follows:

Direct examination by Mr. WILSON:

Q. You have already been examined in this cause, Mr. Seabury, and are one of the complainants?

A. Yes.

Q. And in your former examination you stated that you graduated at the United States Naval Academy in 1871. That was the fact?

A. That is correct.

Q. How early in your naval career did you begin, or first turn your attention to, inventions?

A. It has always been more or less of a hobby of mine—invention.

Q. I refer more particularly to those things that were especially connected with your profession as a naval officer.

93 A. I commenced as early as when I was a midshipman in 1867.

Q. Was that your first essay in invention?

A. That is about the first I recollect.

Q. What was the character, in a general way, of the invention?

A. It was a midshipman's idea of a gun carriage, in which the gun was to furnish its means of returning to battery by the action of gravity.

Q. Did you work it out in the form of a drawing?

A. As well as I could then, yes.

Q. And show it to any one?

A. I remember showing it to a classmate of mine—to whom I was quixotic enough to offer a half share for the use of his drawing instruments.

Q. Did you show it to any one else?

A. I showed it to Lieut. Commander Luce—now rear admiral—Commandant Luce.

Q. Was he commandant?

A. Not superintendent of the academy, but commandant of cadets. That was in the early days of my history.

Q. Was anything done with it?

A. No, it never came to anything. The present admiral expressed an appreciation of the effort, and didn't know what I should do when I became rear admiral," as he said.

Q. What year was that?

A. 1867.

Q. That was your first year at the academy?

A. First year at the academy. I went there from the training ship.

Q. After you graduated did you undertake anything further in the way of invention?

A. Yes, several things. That is, in the ordnance line, you mean?

Q. Yes.

A. The first one afterwards that I ever drew out was a gun carriage, a breech mechanism on the side-pull plan—like the Krupp; it was not the Krupp mechanism, but it was something on the same general plan.

Q. A square slot with a wedge block?

A. Yes, a wedge block. In those days the opinion was divided as to the value of slot mechanism and the slotted screw. A good many of the older officers were still in favor of the wedge.

94 Q. Did you work that out?

A. I worked that out. A model was made of it afterwards by Admiral Simpson's orders at the New York yard, where he was then captain of the yard.

Q. When did you complete that?

A. I completed drawings of that in 1876, and this model was made in 1878.

Q. Was that your own invention?

A. That was my own invention, yes. Admiral Simpson seemed at that time to rather favor the side system—expressed some favorable opinions of some conversions of guns—of old smooth-bore guns which I had made.

Q. What did you do in the way of designing or inventing? I mean in this general direction—matters connected with your profession?

A. That was when I was at sea in 1880 and '81—1879, '80 and '81—on the "Wachusett," on the Pacific coast.

Q. What was it you did?

A. Then I worked out the designs of a vessel and her battery, including carriages and the application of this mechanism that I spoke of.

Q. To the guns for the battery?

A. To the guns for the battery.

Q. What was that—a complete plan?

A. I so considered.

Q. Of a full ship?
A. Of a full ship.
Q. Armored and——
A. Armored and all.
Q. Where did you prepare those plans?
A. They were prepared on board ship, in the after-room, in the ward-room.
Q. What was your position on that ship?
A. Junior watch officer.
Q. With what rank?
A. Rank of master.
Q. What did you do with that design?
A. That design, after I had finished it, I sent to my old commander, Commodore Simpson he was then, and commander of League island, and requested him to overhaul it and send it to the Navy Department, which he did.
Q. And, so far as you know, it is on file amongst the archives of the Navy Department?
A. It is on file still, yes.
95 Q. Did you receive any acknowledgment of that?
A. I received an acknowledgment from Admiral Simpson. I say "admiral" all the time because that was his last rank. He was Commodore Simpson at that time. But the Navy Department apparently paid no attention to it for about four months, and they finally acknowledged receipt, and said it had been submitted for criticism to various bureaus.
Q. You need not give the contents. You finally did receive acknowledgment?
A. Yes, acknowledgment.
Q. And notice from the Secretary of the Navy——
A. That it had been received.
Q. And you also received a letter in reference to it from the then Secretary of the Navy, did you not?
A. Secretary Hunt; yes.
Q. That letter you have?
A. I have, I believe.

Complainants' counsel offers said letter of Secretary Hunt in evidence, and it is marked "Complainants' Exhibit A[1]."

Q. What next did you do in the way of designing?
A. You want me to mention what I did about that work or anything about that?
Q. No, not at present.
A. The next effort I made on guns was a design of a gun—a breech mechanism on the slotted-screw plan.
Q. Prior to that did you make designs for a flag-ship?
A. Yes. I thought you meant ordnance particularly. That was a design for a flags-hip which I did under the orders of the Navy Department for Commodore Temple. They were not special orders from the department; I was simply ordered to report for duty, and given that duty verbally.

Q. Did you work that out?

A. I worked that out and submitted it. I think it was submitted to the first advisory board; I am quite sure it was. Admiral Temple—he was then commodore.

Q. You know that is on file?

A. That is on file as far as I know.

Q. Did you submit anything to the Getty board in 1881?

A. I submitted the designs I had gotten up on the cruise before—one of them the breech mechanism I spoke of. That was a board convened in New York to examine guns and mechanism. It was called "The board of heavy ordnance and projectiles." That convened in July, 1881.

96 Q. What was the general character of the designs you submitted to them?

A. They were what I sent in to Admiral Simpson before—to the Navy Department. That was a nine-inch rifle, and the breech mechanism of which I spoke—side-acting mechanism—and a gun carriage and a projectile having a special system of centering bands and a fuse.

Q. Were these designs referred to in the report of the board—official report?

A. They are referred to in the report of the board and its action upon them.

Q. That report was published?

A. Published; and a copy was furnished me by the War Department, by request. (Book shown witness.) It is referred to on page 51 and at other places of the official report printed in the Government Printing Office in 1882.

Q. Were there any other matters that you worked at before you took up the mechanism of the slotted screw?

A. You mean in regard to ordnance?

Q. Yes.

A. No; after that the report of the Getty board rather settled my ideas in regard to side mechanism, and I dropped it and did as many an officer did, turned to the screw-block, as he should have done long before.

Q. That is in the direct line of breech mechanism?

A. In the direct line of breech mechanism.

Q. But were there not other matters in ordnance that you devised before you got to that point?

A. No; I think they came afterwards. No; let me see; they were about the same time of the other matters—gun carriage and design of a gun.

Q. What time was that—what year?

A. It was in 1883; as near as I can fix it, it was about the summer of 1883, I should say.

Q. That is directly in the line of a mechanism for handling the screw-block you are speaking — now?

A. For opening and closing?

Q. Yes.

A. Yes.

Q. Had you previously worked at any features of the screw-block?

A. Yes. That was included under the same head. I had some peculiar ideas about the screw-threads which I wanted to put
97 in; and from that, from that same block, about that time, I got the idea of wishing to simplify the mechanism—the motions.

Q. Was rapid fire known at that time as anything in use for large guns?

A. No. I was about to say this was not in the direction of rapid-fire guns, because they had not come into use for heavy calibres; but simply an idea of mine to simplify the movements for an ordinary breech-loading gun.

Q. Up to that time how were the screw-blocks handled in opening and shutting the breech?

A. By the three motions. Generally by a lever to turn the block, then to pull out, and then to swing.

Q. At that time was there any device known which accomplished those motions by one movement?

A. Not to my knowledge.

Q. Either of a lever or of a crank?

A. Not to my knowledge.

Q. When did you first get the idea of a device which would accomplish this purpose?

A. As near as I can recollect, it was about that year—1883. I could not give any time—any special time—in the year.

Q. But do you remember as a fact that it was in that year?

A. I should say so.

Q. I mean when did some solution of the problem first present itself to your mind in the form of a device, however, crude?

A. As I say, to the best of my recollection, I carry it back to that year—that I had the idea—an idea which haunted me afterwards a great deal—about being able to open that block by the action of a cam. That was the way in which I put it.

Q. What was that idea? Describe the device as it then presented itself to your mind?

A. Well, naturally, it was not very complete, or I should have worked it out afterwards. The idea was to carry the pin from the block, and by means of a cam on a lever; that is, a cam slot; for instance, when you open that lever to move the block over, and then to pull out: But the getting the block out and the subsequent movements were at the time very indefinite to me.

Q. Did you make sketches at that time?

A. Yes; I made sketches then and afterwards. But I have none to my recollection.

98 Q. What kind of sketches were they?

A. Just little pencil sketches on the edge of newspapers or anything else—something I never carried out to the extent of making a complete drawing of, because I never got the idea developed enough.

Q. You mean at that time?

A. At that time.

Q. Can you make a rough sketch now which will illustrate the idea that you did sketch out at that time?

A. (Witness makes a sketch, and hands same to counsel). About the action of the lever, of course, I have got to be indefinite; but the idea in my mind was the action of the cam in withdrawing—a sort of a general scheme, general idea, I had to put the pivot off here somewhere (indicating). "Somewhere," was an indefinite quantity; but, by turning that lever, the action of the slot on that pin was to turn the block first, and then withdraw it. As I say, that was as far as I got in it for some time.

Q. In this rough sketch which you have made, please add a little lettering, and then give a more full description of the idea.

A. I should call "A" the block, "B" the breech of the gun, "C" the lever, and "D" a pin extending from the block. Of course, I have not made that sketch to perform any work; I merely want to show what the idea was that I had by the opening of it.

Q. Where was the hinge?

A. It would be presumed to be here where that "X" is, to one side; and, as I recollect, my first idea was to have it over the top of the gun, and I presume this would be "X" down here (indicating); still that I wouldn't say. The general idea was to have the lever pivoted somewhere where the action of a cam could be made to work that pin.

Q. Describe a little more fully how this design was expected to work, in your idea?

A. In my idea—in mind, in mind only, and on the very rough sketches I ever had of it—by the first pull of the lever it was to act to rotate the block to unlock. As will be seen by this sketch, the rotation would have been to the right; but that was a mere——

Q. Incident?

A. Incident of the sketch.

Q. And having rotated, how was the action to be kept up?

A. The block was to be pulled out of the gun by the con-
99 tinued pull of the lever; but there came my trouble afterwards; I could get the block half way, and there I would stick; and there is where it hung fire for some time.

Said sketch drawn by the witness is marked "Complainants' Exhibit A²."

Q. Did you vary that idea by putting the pin in other directions?

A. I tried to work that as long as I could until finally it developed afterwards into something else—not at that time; and that idea would go and come to me, but I never could get it out of my mind.

Q. What difficulty did you find with it?

A. The difficulties at that time of working the block after rotating it and getting it out. I had not put the tray on, because the tray was, of course, part of the gun, as I considered it. You have got to have something on the gun after you——

Q. The swinging tray?

A. The swinging tray. So I had not got as far as that to make a drawing of it.

Q. What were the difficulties that you encountered in working that idea out? I mean those difficulties which arose from the idea, or were connected with the idea, as distinct from the other difficulties you might have had in finding it?

A. At that time they seemed insurmountable to me at times, and then I would take it up again and work; but I could get the block out partially; sometimes, as I say, it would stick. If you ask me now why I didn't go ahead and perfect it, as I have afterwards, I answer simply I cannot tell; but it was perfected afterwards.

Q. You finally reached a time when you could get the block out, did you?

A. Yes.

Q. But at that time were you enough of a mechanic to work the thing out in practical form?

A. Well, I think there are various opinions about my mechanical ability. I have a very modest one myself; some others think I am pretty well up in it, and then again that I am wanting in ordnance knowledge, or have been said to be so.

Q. Did you, at the time when this idea was possessing you, more or less, have facilities for making models and experimenting with the contrivances?

100 A. No, I did not. In fact I never had a model made except that breech mechanism which was made in the New York navy yard—I never had a model made in my life—until 1887.

Q. Where were you in the years 1885, 1886 and 1887?

A. I was then attached to the flag-ship of the North Atlantic squadron.

Q. What was the ship?

A. First the "Tennessee," afterwards the "Richmond." The "Tennessee" went out of commission.

Q. At what time?

A. I think we were transferred in January, 1887, from her to the "Richmond;" I think that was the month.

Q. What position did you have on that ship?

A. Watch officer—watch and division officer.

Q. What rank?

A. Lieutenant.

Q. How engrossing were your official duties at that time?

A. They were the duties of a watch and division officer abroad any large ship, and, besides, the quality of the vessel is a flag-ship, and, also besides, the properties of the commander of the ship, the admiral, on different occasions would keep us "whooped up," as the sailors say—very often a drill ashore and a drill aboard. The North Atlantic squadron was not a pleasant seat at that time.

Q. What effect did that have upon your time?

A. Naturally rather diverting to any man's effort to work.

Q. In point of fact, did you have much opportunity during that cruise to work on this idea?

A. No, I had not. I had less than I ever had on board a ship

before. The flag-ship is quite different from another vessel of the squadron.

Q. When did that cruise begin and end?

A. My cruise began in November, 1885; I was detached on the 1st of October, 1888.

Q. During that time did you work at all at this idea?

A. Oh, yes; at various times. I wouldn't swear whether it was the first or second, but it was the first part of October.

Q. Did you make any progress in developing the idea?

A. Not very great; no, for a long time; in fact, scarcely any, except that the idea would go and come to me; I worked at it.

Q. After that cruise ended, how was it then?

A. After that cruise ended and while I was on shore duty in New York, the way to work that principle came to me very easily
101 by somewhat of a change of the cam, as is shown in that gun; the same general principle without—a reversing action, as it were; instead of having the pin on the block, to put the cam on the gun instead of on the lever.

Q. As shown by this model?

A. As shown by this model.

Q. After you completed that cruise you had shore duty, had you?

A. I had shore duty in New York.

Q. Where were you stationed?

A. Stationed at the board of inspection of merchant vessels, with an office at the post office.

Q. New York city?

A. New York city.

Q. And then you took residence——

A. At Bayonne, N. J. My family had been at Bergen Point all the time; I joined my family.

Q. Did you then devote more time to studying this problem?

A. Yes. I had more time off duty. At first I never had any time in the office there to do anything.

Q. What was the first result of that, in the shape of a matured design.

A. This particular one, you mean?

Q. Of your study in that direction?

A. Oh, that I went into before I left the flag-ship "Richmond." I got on another track before I left the "Richmond."

Q. What was that other track?

A. The other track was the opening breech mechanism of a gun in one motion, which I did in another method—another way. I never wanted to use the stepped block of Armstrong, but I did make the mechanism on the Armstrong gun work in one motion; that was at first. That I did in the summer of 1888.

Q. From that did you go on to the cylindrical block?

A. From that I tried the cylindrical block, and succeeded in working that in a manner represented. Do you want me to refer to the model?

Q. Yes.

A. In a manner represented by this model (witness referring to a model present).

Said model is marked "Complainants' Exhibit L."

Q. When did you get this design worked out completely?
102 A. That one was worked out completely in July, 1889. You mean that exact one?
Q. No; I mean that idea.
A. No; it was worked out before that. It was worked out in—the idea was worked out by May, 1889.
Q. And was that followed by your application for a patent?
A. That was followed by the application for a patent.
Q. The patent mentioned in the bill of complaint?
A. In the bill of complaint.
Q. Having worked out this idea which is represented by Exhibit L, did you stop there, or what did you do in the direction of the same general subject?
A. No, I carried it further; and then, wishing to get rid of different parts, I devised this scheme for doing away with the rack, so as to leave the breech face clear, so that there should be no mechanism in the breech face, except a catch which I used then, and the trigger.
Q. This is represented by this exhibit? (Exhibit shown witness.)
A. Yes.

Said model is marked "Complainants' Exhibit M."

(Witness continuing:) This was to do away with the rake, to get the rotary movement, and leaving nothing on the breech face when it was open (witness referring to Exhibit M).
Q. Go on and give the history of your progress on this general subject?
A. Afterwards I took up this (witness indicating). They are so close together that I could not—I should say that this model (witness referring to the one to be marked "Exhibit O") was fully designed before this one—Exhibit M—of which only working drawings for a model were made at first.

Said model just referred to by the witness is marked "Complainants' Exhibit O."

Q. You mean that the working drawings of Exhibit M were made for a model, in your last answer, do you?
A. Yes; of Exhibit M.
Q. You say "M" and "O" came so near together in point of time——
A. In point of time that I confused them for a moment.
Q. That it is difficult to say precisely the order?
A. I know that "O" was designed before "M."
103 Q. What date do you give for "O"?
A. For "O" I should give the commencement of October, 1891.

Q. There is here another model, which we will mark "Exhibit N." When did you complete this device?

A. "N" was the outcome of "M," and was designed to still farther reduce the complication of pieces in February, 1892, "M" being designed during the winter of '91, '92; I couldn't specify the month, probably January.

Said model marked "Complainants' Exhibit N."

Q. Have you stated fully the history of you- efforts now from the time when the first idea took shape in 1883 down to the present time?

A. Well, to the present I have carried it still further; I have put the mechanism attached to the model O—I have put it on a five-inch gun recently, in a slightly different form, using a carrier ring with a tray to the rear; that is, the tray is made from what are now the guides for the lever on the carrier ring in model "O," being placed at the bottom, so that the block must rest on the tray, and the lever standing vertically from the hinge here at the centre of the carrier ring, vertically, and the hinge being on the side.

Q. That, then, is not one continuous movement of the lever?

A. The one I refer to is for a small space, and not necessarily one continuous movement; it is a straight pull for the unlocking, withdrawing, and a swing for the throwing aside of the block; it is not a continuous straight movement.

Q. Have you given the history of your efforts at solving the first problem which presented itself of opening the slotted-screw cylindrical block with the continuous movement of a single lever?

A. I should say that covered the history.

Q. From 1883 down to the present time?

A. Down to the present time. I could state what work I was engaged upon which interrupted a great deal of that time, if you wish.

Q. Did you follow the thing up as diligently as your official duties permitted you to do?

A. I should say I did.

Q. And the first outcome was the mechanism shown by Exhibit L?

104 A. There the first one movement was the Armstrong—the double-slotted block, which, as I said, I didn't care for.

Q. That was the stepped block?

A. That was the stepped block, but not cylindrical block. The first one of the cylindrical block was shown in Exhibit L.

Q. The Armstrong conical?

A. It is conical and double-stepped too There are two series.

Q. That conical form of block eliminated one of the three motions?

A. One of the three motions; left but two.

Q. But for the mechanism which should accomplish the three motions with the same continuous movement of the single lever, the first that you worked out into a practical form was L?

A. Was L.

Q. Having turned from the original idea to this?

A. To what seemed to me a more easily arrived at result, although certainly much more complicated.

Q. And that was followed next by O?

A. By O, which was the outcome of my original thought.

Q. And then followed M?

A. M.

Q. And then N?

A. And then N.

Q. And all these models have been made from your own designs?

A. From my own designs and under my own surperintendence.

Q. Now, at the time of your application for a patent upon the mechanism which L represents, did you have knowledge that there was any other device that had ever been made or patented for accomplishing those three motions with a continuous movement of a single lever on a cylindrical slotted block?

A. I did not.

Q. Did you at that time know of the invention of Canet in that direction?

A. I did not.

Q. Or of Nordenfelt's?

A. I did not.

Q. When did you first learn anything about Canet?

A. I first heard of Canet's invention when it appeared in a paper which I occasionally saw at that time, the London "Engi-
105 neering;" I won't be positive whether it was "Engineering" or "Engineer."

Q. I think it is "Engineering."

A. I saw it in both papers, but at different times; but the first paper, I think, was the "Engineer."

Q. When was that?

A. That was the summer of 1889.

Q. Was that before or after your patent was applied for?

A. The summer of 1889, did I say? No, it was a year later: the summer of 1890.

Q. It was after your first patent was issued?

A. It was after the first patent was issued, yes.

Q. That is, after the issue of the patent in suit?

A. Yes.

Q. And when did you first acquire knowledge of the existence of Nordenfelt's English patent 7195?

A. I first saw that patent, or first heard of it, in fact, when it was shown me by yourself in this office.

Q. During the pendency of this suit?

A. During the pendency of this suit.

Q. Were you ever offered a position in the Bureau of Ordnance of the Navy?

A. Never.

Q. Either directly or indirectly?

A. Either directly or indirectly. I have heard it said that I ought to be there, but that is all that I have ever heard in relation to it.

Q. Did Commodore Folger ever request you to unite yourself with that bureau?

A. Never.

Q. What did he say to you on the subject?

A. When I showed him the model L he remarked, "Seabury, you ought to have been in this bureau." That is the only conversation I ever had with him in regard to it.

Q. Did Commodore Sicard ever request you to unite yourself with the bureau?

A. Never.

Q. And you never had any orders to that effect?

A. Never had any orders to that effect.

Q. Is Exhibit L the model which you referred to in your former testimony as the model you showed Commodore Folger in Washington at the time you had the conversation with him?

A. It is.

106 Q. In regard to giving the mechanism a test?

A. It is.

Q. The identical model?

A. That model was shown at that time; but the drawings for the mechanism I suggested were somewhat modified from that—I wish to say that—simpler.

Q. Reference has been made in some of the proofs to a five-inch gun which had mechanism of the general character shown by the model L, and was in the hands of the army officers at Sandy Hook. You were familiar with that gun, were you?

A. I was.

Q. Did you make the drawings?

A. I made the drawings for the mechanism.

Q. For the mechanism?

A. For the mechanism.

Q. State whether or not there was any difficulty in the working of the breech mechanism in that gun.

A. No difficulty whatever, with the exception of the extractor, and a fault which I myself saw—the great swing of the lever; that would not constitute a difficulty in the working, it was merely a difficulty in the handling.

Q. What made the difficulty with the extractor?

A. The extractor was placed in too small a space; the extractor or the lever which threw out—the main extractor in the gun; and my first design for the trip-hook, which was caught by the tray in opening, was too light and broke in extracting the empty case.

Q. What was the extractor intended to remove in that particular gun?

A. It was intended to remove a short metallic case or gas check, like a vessel ammunition case, except shorter, with which I had en-

Q. Having turned from the original idea to this?

A. To what seemed to me a more easily arrived at result, although certainly much more complicated.

Q. And that was followed next by O?

A. By O, which was the outcome of my original thought.

Q. And then followed M?

A. M.

Q. And then N?

A. And then N.

Q. And all these models have been made from your own designs?

A. From my own designs and under my own superintendence.

Q. Now, at the time of your application for a patent upon the mechanism which L represents, did you have knowledge that there was any other device that had ever been made or patented for accomplishing those three motions with a continuous movement of a single lever on a cylindrical slotted block?

A. I did not.

Q. Did you at that time know of the invention of Canet in that direction?

A. I did not.

Q. Or of Nordenfelt's?

A. I did not.

Q. When did you first learn anything about Canet?

A. I first heard of Canet's invention when it appeared in a paper which I occasionally saw at that time, the London "Engi-
105 neering;" I won't be positive whether it was "Engineering" or "Engineer."

Q. I think it is "Engineering."

A. I saw it in both papers, but at different times; but the first paper, I think, was the "Engineer."

Q. When was that?

A. That was the summer of 1889.

Q. Was that before or after your patent was applied for?

A. The summer of 1889, did I say? No, it was a year later: the summer of 1890.

Q. It was after your first patent was issued?

A. It was after the first patent was issued, yes.

Q. That is, after the issue of the patent in suit?

A. Yes.

Q. And when did you first acquire knowledge of the existence of Nordenfelt's English patent 7195?

A. I first saw that patent, or first heard of it, in fact, when it was shown me by yourself in this office.

Q. During the pendency of this suit?

A. During the pendency of this suit.

Q. Were you ever offered a position in the Bureau of Ordnance of the Navy?

A. Never.

Q. Either directly or indirectly?

A. Either directly or indirectly. I have heard it said that I ought to be there, but that is all that I have ever heard in relation to it.

Q. Did Commodore Folger ever request you to unite yourself with that bureau?

A. Never.

Q. What did he say to you on the subject?

A. When I showed him the model L he remarked, "Seabury, you ought to have been in this bureau." That is the only conversation I ever had with him in regard to it.

Q. Did Commodore Sicard ever request you to unite yourself with the bureau?

A. Never.

Q. And you never had any orders to that effect?

A. Never had any orders to that effect.

Q. Is Exhibit L the model which you referred to in your former testimony as the model you showed Commodore Folger in Washington at the time you had the conversation with him?

A. It is.

106 Q. In regard to giving the mechanism a test?

A. It is.

Q. The identical model?

A. That model was shown at that time; but the drawings for the mechanism I suggested were somewhat modified from that—I wish to say that—simpler.

Q. Reference has been made in some of the proofs to a five-inch gun which had mechanism of the general character shown by the model L, and was in the hands of the army officers at Sandy Hook. You were familiar with that gun, were you?

A. I was.

Q. Did you make the drawings?

A. I made the drawings for the mechanism.

Q. For the mechanism?

A. For the mechanism.

Q. State whether or not there was any difficulty in the working of the breech mechanism in that gun.

A. No difficulty whatever, with the exception of the extractor, and a fault which I myself saw—the great swing of the lever; that would not constitute a difficulty in the working, it was merely a difficulty in the handling.

Q. What made the difficulty with the extractor?

A. The extractor was placed in too small a space; the extractor or the lever which threw out—the main extractor in the gun; and my first design for the trip-hook, which was caught by the tray in opening, was too light and broke in extracting the empty case.

Q. What was the extractor intended to remove in that particular gun?

A. It was intended to remove a short metallic case or gas check, like a vessel ammunition case, except shorter, with which I had en-

deavored to show the principles of a rapid-fire gun on a gun which it was impossible to convert to that idea.

Q. What was the structure of this cartridge base?

A. The cartridge base was of drawn brass, and on its base was a steel cup carrying the flange by which the empty case was to be withdrawn from the gun by the extractor. This steel base was riveted to the brass cup. Unfortunately, in manufacture, the proper quality of steel was not used; it had no temper, and under every shock of discharge, every expansive actions the cases would be set out more and more into the bore of the gun, until they stuck so that no extractor under a rammer from the muzzle would get them out.

107 Q. In other words, the effect of the discharge was to hammer them and spread——

A. Hammer them and spread them, and they never returned to anything like their original position.

Q. And they wedged?

A. And they subsequently wedged in entering the case after another cartridge. They were not intended to enter separately at first; the cartridge back was supposed to screw to the wood disk, and this was held within the brass cup, thereby making one cartridge of it with its own gas check.

Q. Have you read the testimony of the defendant in regard to the action of the gun as he saw it at Sandy Hook?

A. I have.

Q. What have you to say as to the gun ever acting in that way in your experience?

A. I have never seen the action which the defendant speaks of—the connecting pin here between the retractor and the lever pivot and crank—I have never seen that disconnected in forcing cartridges into place. I have been surprised myself, because I expected to see it go. I have seen it working hard, but I have never seen it disconnected. That was the trouble that was witnessed at Sandy Hook. Those cases wouldn't be shoved into place except by a hard ram.

Q. Then you attribute that difficulty, as far as it occurred, to the expansion of these cases and the consequent difficulty of ramming them into the gun?

A. Of ramming them into the gun, I should call it.

Q. How many times did you handle that mechanism on the five-inch gun?

A. I couldn't say; a great many times, naturally, being the inventor.

Q. A dozen or a hundred?

A. A hundred times, at least, is a very safe estimate.

Q. When did the idea of taking out a patent on any of your inventions first occur to you?

A. I never took out a patent—I don't say that the idea never occurred to me—but I never took out a patent until 1887, on a device for handling ammunition.

Q. Did any one suggest to you to do that?

A. Yes; it was suggested to me by one person—I remember very distinctly—Commodore Folger.

Q. What did he say?

A. I was at the Bureau of Ordnance inspecting the shell lift
108 with Commodore Sicard, who was then chief of bureau, and Commodore Folger was then inspector of ordnance, and he was in the office at the same time; and after Commodore Sicard had expressed his opinion of it which, as I recollect, was favorable, Commodore Folger followed me into the next office, and he said, "Seabury, that is a very good thing. Patent it all over!" Or he may have said, "Patent it everywhere." I wouldn't say which.

Q. Had you patented any of the numerous previous devices which you have spoken of in your testimony?

A. I had not.

Q. What has become of the sketches and drawings, such as you made in the progress of your working at this original idea of breech mechanism?

A. I never made anything more than the small hand sketches on my lap, when I was taking a quiet smoke, sometimes on board ship; I mean, I never went to the extent of a drawing other than those small sketches. But, I presume, they were destroyed—as you would take a piece of paper, and when you would get disgusted with the idea for a moment, would drop it, and would take it up again, or would lose the paper, and never keep any memorandum of it.

Q. Have you looked among your papers to see if you have any of those left?

A. Very thoroughly. I cannot find them. Anything in the way of finished drawings I have generally managed to keep, notwithstanding my movements. It is not an easy matter to keep your papers, moving around.

Q. I suppose, at the time that you made those drawings, you had no anticipation there would be ever such a question as is here presented?

A. Never the slightest.

Q. Of what State are you a native?

A. New York. Long island—if you can call Long island part of New York State.

Q. (Certain blue-print drawings shown witness.) When was it that you got up the designs which you have spoken of for a flagship?

A. That was in 1881.

Q. Did you also get up designs for a gunboat?

A. I subsequently designed a gunboat for Admiral Porter, commencing in the early part of 1884, or the latter part of 1883, and being occupied upon it very continuously, until the summer of 1885. That was by order, the department ordering me to Admiral Porter's staff, and being under the admiral's directions to do this work.

109 Q. It was official duty, then?

A. It was official duty.

Q. Did you complete the designs?

A. I completed the designs twice; the first time on one scale, and then enlarging them to another scale. This represents the second scale (witness indicating said blue prints).

Q. This drawing?

A. That is, this set of drawings; not this one.

Q. What labor did that involve; of what character?

A. It involved the laying down of the ship, the general planning of all her scantling, of all her arrangements—of the battery, of the decks, of quarters, of store-rooms, magazines, shell-rooms—everything, in fact, in relation to a ship; a calculation of the weights and the center of gravity in detail, of the hull, the equipment of all the fittings of a ship; her lines (that came first, however), her displacement, her metacentric position, all her curves of buoyancy, &c.; the power of her engines necessary for a certain speed; about everything under the head of ship-building.

Q. Her armament?

A. Her armament. Of course, I used the existing guns at that time—service guns—put them on the ship.

Q. Place for battery?

A. Certainly; everything in relation to a man-of-war.

Q. What was the idea of the boat?

A. She was built to carry out the admiral's idea or design—to be built to carry out the admiral's idea—of an improved "Alarm," that being his pet torpedo vessel. He wished to adhere to a good many points that I cannot say that I, as a younger man, thought much of; but still I carried out the designs to the best of my ability, as I was on duty for his work, and not mine.

Q. And that pretty continuously engrossed your time?

A. That was very continuously—night and day.

Q. Involved a great deal of computation?

A. A great deal of computation, and a great deal of labor, as a glance at some of the plans—some of the general results—I think, will show.

Q. Have you the drawings here?

A. Those are the blue prints of some of the plans of the ship (witness indicating said blue prints). But the calculations are not here, unfortunately.

Said blue prints are marked "Complainants' Exhibits B^1, B^2, B^3, B^4, B^5, B^6, B^7, B^8 and B^9, for identification."

110 Q. To recur for a moment to the original idea of which you have made a rough sketch in Exhibit A^2, were there any other forms or particulars of that that you recall during your early study of the matter; and, if so, please show them by a similar sketch.

A. It was very similar. I carried the pin below the gun (witness makes a sketch). That was merely a variation in the idea—having the pin extend below the gun, to get more of a sweep; but it was discarded as being too weak mechanically.

Q. On account of the length of the pin?

A. Yes.

Q. And weight of the block?

A. And weight of the block; and as I considered at the time, and also in connection with anything that had to support the block when it was out, I didn't at the time see the way to support it.

Q. Now, while working at this idea on shipboard, you, of course, had nothing to work with but pencil and paper?

A. That is all. I had, of course——

Q. Or drawing tools?

A. I had drawing tools when I wanted them.

Q. You had no mechanical contrivances for experimenting with the different forms of the structure or shapes of parts?

A. No, not at all.

Q. Or lines of cams; it was purely a mental exercise, was it?

A. In fact, it wouldn't have done for me, if I had desired to keep it for myself, to get anybody else to do it aboard ship. Getting one of the men to do it would make it public property right off.

Q. How old were you when you went to the navy?

A. I entered the training ship "Sabine" when I was fifteen years and ten months old.

Q. And your whole life has been spent in the navy?

A. All except the years previous to that.

Q. And all the designing that you have done in the various directions mentioned has been, with the exception of the designs of the flag-ship and gunboat, voluntary work on your part in addition to all your official duties?

A. Oh, yes; it was, all of it.

Hearing adjourned until 1.30 p. m., same day.

111 NEW YORK, *May* 12, 1893—1.30 o'clock p. m.

Present: Parties as before.

Mr. Phillips states that he has no cross-examination to make of the witness.

JOHN W. WILSON, called on behalf of complainants, being duly sworn, testifies as follows:

Direct examination by Mr. WILSON:

Q. State your age, residence and occupation.

A. My age is sixty-two; residence, New York city; I am interested in various enterprises; I am not engaged in any active business at all at present.

Q. Were you formerly connected with the United States Navy?

A. I was. I was a volunteer officer.

Q. At what time?

A. Previous to the war; first, in 1853 to 1856; then, again, in 1859; then during the war—part of the time during the war, I was transferred to the navy.

Q. What rank did you hold then?

A. Lieutenant—first and second lieutenant.

Q. In the volunteer navy?

A. I completed the designs twice; the first time on one scale, and then enlarging them to another scale. This represents the second scale (witness indicating said blue prints).

Q. This drawing?

A. That is, this set of drawings; not this one.

Q. What labor did that involve; of what character?

A. It involved the laying down of the ship, the general planning of all her scantling, of all her arrangements—of the battery, of the decks, of quarters, of store-rooms, magazines, shell-rooms—everything, in fact, in relation to a ship; a calculation of the weights and the center of gravity in detail, of the hull, the equipment of all the fittings of a ship; her lines (that came first, however), her displacement, her metacentric position, all her curves of buoyancy, &c.; the power of her engines necessary for a certain speed; about everything under the head of ship-building.

Q. Her armament?

A. Her armament. Of course, I used the existing guns at that time—service guns—put them on the ship.

Q. Place for battery?

A. Certainly; everything in relation to a man-of-war.

Q. What was the idea of the boat?

A. She was built to carry out the admiral's idea or design—to be built to carry out the admiral's idea—of an improved "Alarm," that being his pet torpedo vessel. He wished to adhere to a good many points that I cannot say that I, as a younger man, thought much of; but still I carried out the designs to the best of my ability, as I was on duty for his work, and not mine.

Q. And that pretty continuously engrossed your time?

A. That was very continuously—night and day.

Q. Involved a great deal of computation?

A. A great deal of computation, and a great deal of labor, as a glance at some of the plans—some of the general results—I think, will show.

Q. Have you the drawings here?

A. Those are the blue prints of some of the plans of the ship (witness indicating said blue prints). But the calculations are not here, unfortunately.

Said blue prints are marked "Complainants' Exhibits B^1, B^2, B^3, B^4, B^5, B^6, B^7, B^8 and B^9, for identification."

110 Q. To recur for a moment to the original idea of which you have made a rough sketch in Exhibit A^2, were there any other forms or particulars of that that you recall during your early study of the matter; and, if so, please show them by a similar sketch.

A. It was very similar. I carried the pin below the gun (witness makes a sketch). That was merely a variation in the idea—having the pin extend below the gun, to get more of a sweep; but it was discarded as being too weak mechanically.

Q. On account of the length of the pin?

A. Yes.

Q. And weight of the block?

A. And weight of the block; and as I considered at the time, and also in connection with anything that had to support the block when it was out, I didn't at the time see the way to support it.

Q. Now, while working at this idea on shipboard, you, of course, had nothing to work with but pencil and paper?

A. That is all. I had, of course——

Q. Or drawing tools?

A. I had drawing tools when I wanted them.

Q. You had no mechanical contrivances for experimenting with the different forms of the structure or shapes of parts?

A. No, not at all.

Q. Or lines of cams; it was purely a mental exercise, was it?

A. In fact, it wouldn't have done for me, if I had desired to keep it for myself, to get anybody else to do it aboard ship. Getting one of the men to do it would make it public property right off.

Q. How old were you when you went to the navy?

A. I entered the training ship "Sabine" when I was fifteen years and ten months old.

Q. And your whole life has been spent in the navy?

A. All except the years previous to that.

Q. And all the designing that you have done in the various directions mentioned has been, with the exception of the designs of the flag-ship and gunboat, voluntary work on your part in addition to all your official duties?

A. Oh, yes; it was, all of it.

Hearing adjourned until 1.30 p. m., same day.

111 NEW YORK, *May* 12, 1893—1.30 o'clock p. m.

Present: Parties as before.

Mr. Phillips states that he has no cross-examination to make of the witness.

JOHN W. WILSON, called on behalf of complainants, being duly sworn, testifies as follows:

Direct examination by Mr. WILSON:

Q. State your age, residence and occupation.

A. My age is sixty-two; residence, New York city; I am interested in various enterprises; I am not engaged in any active business at all at present.

Q. Were you formerly connected with the United States Navy?

A. I was. I was a volunteer officer.

Q. At what time?

A. Previous to the war; first, in 1853 to 1856; then, again, in 1859; then during the war—part of the time during the war, I was transferred to the navy.

Q. What rank did you hold then?

A. Lieutenant—first and second lieutenant.

Q. In the volunteer navy?

A. In the volunteer service. In 1853 I was not a lieutenant; then I was an acting master.

Q. And at last?

A. At the last a lieutenant.

Q. You have had some acquaintance, then, with naval matters, including ordnance?

A. Yes.

Q. And have you kept up your interest in the subject since you have left the service?

A. Not particularly so—no, until this came up.

Q. Until you became interested in the present subject of controversy?

A. Yes.

Q. When did you first know anything of any designs of Mr. Seabury's?

A. In the fall of 1888; in November my attention was first called to a drawing, to the best of my recollection.

Q. Where was that?

A. At the office in the New York post-office building.

Q. Whose office?

A. Commodore Erben's office. He was stationed there.
112 He was inspector of merchant marine. I believe that is what they call it.

Q. You mean Lieutenant Seabury was then there?

A. He was then attached to that office.

Q. What did you see there?

A. I saw drawings—pencil drawings at that time—made by Seabury.

Q. What did they represent in a general way?

A. The screw-block with some devices or designs for handling the block.

Q. Approaching the designs shown by any of these four models here, Exhibits L, M, N and O?

A. Well, I am not sufficiently familiar with drawings to be able to explain exactly what they were, but I understood from Lieutenant Seabury that they were plans with the idea of opening the breech block by one motion.

Q. Did he say anything to you at that time in regard to the length of time he had been working on that subject?

A. He did.

Q. What did he say?

A. He said that in 1879 he was working on a square block. I don't know what his idea was; he didn't describe that to me. But he said in 1883 he dropped the idea of the square block, because the screw-block was then coming into general use, and had been pronounced better than the square block, and since then he had been working with the idea of improving the method of opening that block.

Q. Did he state what he desired to accomplish in the problem he was working at?

A. My impression is that the idea that I received at the time was

that he was to do it by one motion. I never knew of any other—heard of any other.

Q. Did that interest you at the time so as to fix it upon your mind?

A. It did very much indeed. Because I asked the question whether there was anything of the kind that he knew of. He said that he didn't know of anything.

Q. How soon after that was it that you got information, or heard anything further, in regard to his progress in the invention?

A. He was working at it, I think, some time in the early spring—the very early spring of 1889; and I walked into the office one morning, and I don't think I can state the date exactly.

113 Q. That is not material.

A. It might have been in February or March, or somewhere about there. He then told me that he had accomplished it, and had succeeded in carrying out his idea; he could do it with one motion. Of course, I saw drawings, but I was not familiar enough with drawings to tell what they were.

Mr. PHILLIPS: The question is objected to, and the answer also as to what Mr. Seabury said.

Q. After you were told that the invention had been perfected did you take personally an interest in it?

A. I did.

Q. In what way? I do not mean to what extent.

A. Simply to say that if he thought he had accomplished that, I was willing to put in money to develop it; I was willing to advance money—pay for patents, pay for models, pay for any other work that might be necessary to be done. That was in the spring of '89.

Q. And you did do that, did you?

A. I did.

Q. You became personally interested?

A. Personally interested.

Q. In it?

A. Yes.

Q. And did you suggest his taking out patents?

A. I did; and he expressed a desire to do so.

Q. And you remained interested to the present time?

A. Yes.

Mr. PHILLIPS: I object to all conversation that passed between Mr. Seabury and the witness. I object to all that Mr. Seabury said.

No cross-examination.

J. WALL WILSON.

114 In the Circuit Court of the United States for the District of Maryland.

JAMES B. M. GROSVENOR and Others, Complainants, *against* ROBERT B. DASHIELL, Defendant. } Before John H. Kitchen, Esq., Examiner.

NEW YORK, *June 10th*, 1893.

Present: Counsel as before.

SAMUEL SEABURY, recalled as a witness on behalf of complainants.

Direct examination.

By Mr. JENNER:

Q. Lieutenant, I want to ask you a few questions with respect to your early ideas about breech-loading guns. What led you to the making of the invention which is described in your patent here in suit?

A. The idea was to simplify the movements necessary to open the breech.

Q. When did that idea occur to you?

A. I had first that idea prior to the cruise of '85. As I stated before, the very first idea, as I recollect, was about '83.

Q. What was your object in wanting to simplify the mechanism for opening the breech?

A. To gain time.

Q. To gain time in what?

A. In loading the gun and charging also.

Q. Did you have any idea of how you wanted to simplify that movement?

A. Yes; the ideas were quite clear.

Q. What was the idea?

A. The construction of the gun made it so; in order to fire the gun it must be locked, and in the screw mechanism the block is in the gun and screwed up. This block and the gun have slots which allow the block to be withdrawn after a partial revolution. My idea was at first to rotate the block to the necessary amount; then, to withdraw it from the gun upon the tray, which was an old idea already in use, and afterwards to swing the whole mechanism from the breech of the gun.

115 Q. Your mechanism, which you contemplated improving, did that have a breeck block which was rotatable in the breech on a screw?

A. Yes, sir: I have just described that.

Q. Did that have a tray on it from which the block was withdrawn?

A. Yes, sir; all guns have either a tray or a carrier ring.

Q. Then you contemplated using in these improvements of yours two elements of the old gun?

A. They were necessary parts in the mechanism in a gun of that kind.

Q. What were the first ideas that occurred to you of the means of doing this?

A. The very first idea I had, as I recollect it, for rotating the block was the natural means of a rack.

Q. By "rack" you mean the rack and pinion?

A. By a rack tangential to the surface of the block, to work the thing over.

Q. Did you have any idea of the means of working the rack—and, if so, what was the idea?

A. The means that I had, or thought of at first, were to turn that rack, to move it by some connection with a shaft which when worked by a lever or handle should slide the rack from side to side and so work the block.

Q. What means occurred to you of withdrawing the block from the breech?

A. I had a general idea of withdrawing the block by an arm onto the tray.

Q How did you contemplate working that arm?

A. The idea was to move it in connection with the other parts of the mechanism, to take one movement after the other.

Q. The only parts of the mechanism that thus far you have mentioned, or mentioned before, is the arm which was to withdraw the breech block. Is that the part which was to operate the rack?

A. Yes.

Q. You intended, then, to have the arm for withdrawing the breech operate after the mechanism which operated the rack?

A. It had its natural sequence, and that same idea I carried out in the form of a lever and an open-arm block which I have already described.

116 Q. Did you contemplate attaching the arm for withdrawing the bleech block to anything?

A. To the breech of the gun, as it seemed to me the most natural place to put it.

Q. To the breech of the gun directly?

A. What do you mean—through a bearing? There must be a bearing of course.

Q. What did you contemplate using as the bearing?

A. I don't understand exactly your question. Of course, there must be a shaft to work the mechanism.

Q. That is what I was endeavoring to get at.

A. There must be a shaft or pivot.

Q. Do you have in mind now that in your explanation of this matter a shaft and a pivot is the same thing in this connection?

A. Yes, sir; I have referred to it in my other work as the same thing.

Q. Now, what was the next thing in bringing about this simplicity that you contemplated doing?

A. How far did you get, to the withdrawing of the block?

Q. To the withdrawing of the block.

A. After the block was on the tray, to swing it to one side.

Q. What means did you contemplate of doing that?

A. The general idea that I had was that the movement would be followed up. The movement of the lever which did all these things would have to carry the tray in connection with the block to one side.

Q. By what means did you contemplate carrying the tray away with the block on it?

A. By a lever by the shaft.

Q. Did you contemplate attaching the lever to anything besides the tray?

A. The lever would have to be attached through various movements to everything. Its motion would have to be taken up one after another.

Q. What do you m-an "taken up one after another"?

A. The different movements; it would have to rotate, withdraw and carry to one side—the lever must do all that.

Q. Did you mean that one lever would do the whole, or different levers do different parts?

A. If I had the idea of an arm to pull the block out, I would have to operate that arm by the lever at the same time and same way with the tray.

Q. Did you expect that the lever which should carry the
117 tray away would be connected so as to get your continuous movement that you have told about?

A. To the shaft or above.

Q. Where did you expect to fulcrum your shaft?

A. On the breech of the gun.

Q. Then, as I understand it, your object was to simplify the operation of loading, and to do that you intended to rotate the breech block, withdraw it and carry it away by a consecutive movement of a lever?

A. That was my idea from the first.

Q. And the various arms which should govern the rack for rotating the breech block, for withdrawing it and for carrying it away, were to be attached to a shaft, should be fulcrumed upon the breech of the gun and should be operated by one lever?

A. That is the idea.

Q. Now, when did you have that conception of the means of accomplishing what you wanted to do?

A. Prior to the cruise that I went on from '85 to '88.

Q. Prior to that cruise?

A. Yes, sir.

Q. Now, when did you work on the details of those means in proportioning one part to the other?

A. Whenever I got an opportunity.

Q. During what period?

A. Probably from the period of my conception I was working at various times on it. The time was very irregular; I had a great many things to do.

Q. Did you work on it while you were on the cruise?

A. Yes, sir.

Q. But in the rough way that you have already mentioned?

A. But in the rough way that I have already mentioned in my former testimony.

Q. Did you have any facilities, while you were on shipboard, for making any working model?

A. No, sir.

Q. As a mechanic do you think it was impossible, or with your knowledge of mechanics and the practical application of mechanical forces, do you think it would be possible or practicable to correctly proportion those various parts without either carefully drawing or the making of a model?

A. No, sir; I do not.

Q. I understand you to say there was no opportunity for either while you were on board?

118 A. There was hardly any opportunity for anything on board of ship.

Q. Did you work out the mechanical details of your arrangement of levers, which you had before thought of, and the proportion of one part to another, at the first opportunity that you had?

A. Yes, sir.

Q. When did that first opportunity occur?

A. The first real opportunity that I had for work was after that cruise expired—the latter part of it—when we were laid up.

Q. Were you not on shore from the '85 to '88 cruise?

A. In the latter part of the cruise, in '88, I had some opportunity which I improved.

Q. Where were you then?

A. At the navy yard, the last three months, and had more opportunity.

Q. What did you do then?

A. Then we tied up alongside the dock and the ship was preparing for a foreign cruise, and I expected to leave her, which I did shortly afterwards.

Q. What did you do there towards working out your idea?

A. Then I undertook to work it right down to form, to get a breech mechanism that would work. Then I got out two or three ideas after that, which resulted in this one thing.

Q. I would like you to give a clearer idea of your duties on shipboard, for the purpose of showing to the court just how your time was occupied in the daily routine of the ship's work.

A. Well, some ships vary from others, but the flag-ship work—this was on a flag-ship—is always more than other work. The flag-ship that I was on was blessed on two occasions with admirals with very great exercising propensities, who kept us on the move quite continually.

Q. Well, is one day a specimen of the rest on shipboard?

A. Not altogether. In the first place, I was a watch officer. I was an intelligence officer. I had to write up intelligence of the various things—that is, fortifications and things of that kind.

Q. Were you an active officer?

A. Yes, sir; standing watch in my turn, night and day.

119 Q. We civilians don't understand precisely what that means. Won't you give us an idea of the daily routine of your work on shipboard while you were watch officer?

A. Taking my own case, for instance, there was a greater part of the time we were in what is called four watches; in other words, four officers to do the ship's work, taking charge of the deck. Taking charge of the deck involves temporary command of the ship, taking practical command of the ship, especially during night watches, as the watch officer is the representative of the captain. In men-of-war, especially in the ship that I was on, the duty was kept up by the regular watch officers as strictly in port as at sea.

Q. I want to know what you did—how your twenty-four hours were spent.

A. Well, for instance, a man would have at sea the middle watch, 12 to 4 a. m. Of course, he had to get his sleep after.

Q. You would sleep from 4 o'clock to when?

A. From 4 o'clock to 8.30 say, that is for that man. Then, at 9.30 there would be quarters for inspection.

Q. What do you mean by that?

A. An assembly for inspection, the same as on shore—quarters for inspection or assembly for inspection on shore.

Q. Explain what you mean.

A. The gathering of the crew at certain places at the guns for inspection.

Q. What did you do as watch officer—what did you have — do with that?

A. I was about to say at these functions the watch officers were the men most in demand, as they were in immediate charge of divisions of men corresponding to companies of men in land forces.

Q. In other words, the crew is divided into divisions, and a certain division is put under charge of each one of the watch officers?

A. Yes, sir.

Q. How long did that inspection take?

A. That inspection and the following exercises would take something over an hour.

Q. That would be supervised by you as watch officer when it was your watch?

A. This comes outside of the watch.

Q. At the end of the hour what did you do?

A. At the end of the hour—there were various duties—at the end of the hour I might have been on a summary court-martial. The court must meet. That court might be in session for two or

120 three days even, occupying the time when you are off duty, or you might get your rest. Those are the things which are irregular. I might be on a board of survey, to survey the ship's stores. I might be on a board to examine some particular part of the ship's equipment which was faulty, or such things as that, the watch officer is called to do; his time is not his own.

Q. He was busy about something?

A. Busy about something all the time.

Q. That would bring you up to when?
A. To noon.
Q. What took place then?
A. Then came the midday meals.
Q. How much time for that?
A. An hour.
Q. Then, at the end of the midday meal?
A. At the end of the midday meal afternoon exercises.
Q. What were those?
A. Ship's routine, exercises of different kinds, drills.
Q. How long did that take?
A. Generally an hour.
Q. Well, then what?
A. Then it is quite possible the court sat again in the afternoon if it was sitting in the forenoon, or the board. I don't say that is daily; there is always a possibility of it.
Q. That would bring you up to what hour?
A. To say about four o'clock.
Q. What would occur then?
A. On watch again.
Q. How long on watch?
A. At sea the watch would be short; that would be only two and a half hours to carry you over to the dinner relief.
Q. Then what?
A. Then came your evening quarters again, no exercises then.
Q. No drill then?
A. No.
Q. What did take place?
A. Sundown and dark.
Q. Were you busy?
A. After that, no.
Q. During what time were you not busy?
A. Well, the dinner hour would take you up to about seven o'clock, and then after that we would be off, unless you went on watch again.
121 Q. How long would you be off?
A. Then you would go on next morning at four again, four to half past eight.
Q. When did you go to bed?
A. If a man wanted to get any sleep he went to bed about half past eight. The routine is regular, but the things you have to do are very irregular.
Q. As you have described the day, is that a fair specimen of the daily routine of an officer of your rank on board of a man-of-war when the admiral is there?
A. Yes, sir; except there is more of it sometimes.
Q. There is not less?
A. There is not less. I don't mean that those courts and boards would meet every day; that is a possible thing, but you always have to stand the chances of that.
Q. Practically, when you are not eating and sleeping——

A. You are liable to be called upon to do something.

Q. There is some official duty to be performed connected with your officer's work?

A. Nearly always, or you can stand in momentary expectation of having it. It is a case of constant stand-by on board ship. You don't know what you are going to do next.

Q. When you receive orders to do something you have got to do it right away?

A. Yes, sir; beside the ship-work, we have several land parties, where we have ten days, and camp out, and become soldiers—a camp regularly established—a camp for instruction. There, of course, anything like work is out of the question.

Q. In those hours which you have given, you have stated about the amount of time that is taken, but the portion of the day when your watches would come would vary?

A. Yes, sir; they are changed by what they call the dog watches. The four-hour watch is divided in two-hour watches, which alternates the watch of each man every day.

Q. You spoke of having a division under your charge?

A. Yes, sir.

Q. What were your duties in respect to that division independently of watches?

A. Entirely in charge of the division; and, where it was a gun division, you had charge of the guns to see they were always properly in order—properly equipped. My division, for instance, consisted of four nine-inch guns at that time, and all the clothing and what are called small stores for the men of the division are required for regularly on requisitions which the officer of the division has to take charge of and generally has to make out. I always did, because I seldom had a sub in my division.

122

Q. Then, how about instruction?

A. Then, instruction; there is also instruction of apprentices. There was on that ship a board appointed to examine apprentices. That, of course, was quarterly, which you always had to take your turn at.

Q. As to drill, did you have to instruct your division in drill?

A. Yes, sir.

Q. In what line of exercises did you have to drill them?

A. In great guns or ordnance, in infantry and artillery and sword practice, pistol drills, torpedo exercises and boat drill, and many things which were covered by oral instructions without reference to any particular branch or arm, you might say.

Q. And for the purpose of giving that instruction, did you have to keep yourself well posted all the while?

A. Naturally, because many questions would be asked which would be very unpleasant for an officer to be unable to answer.

Q. That involved study?

A. Yes, sir.

Q. Did you have duties to do in the way of writing at sea, writing up reports of watches or any such duty?

A. You mean the log?

Q. Yes.

A. That is so small a time, there is no need to count that. I would not like to be put down as referring to that as a piece of work.

Q. When you acted as intelligence officer, what is that?

A. That is an office which now on board ship is given to one of the watch officers as a rule, and he is supposed to make himself thoroughly acquainted with all improvements that he meets abroad either in foreign ships or armaments, forts, or anything that is of interest to the Navy Department.

Q. Did you act as intelligence officer?

A. At a part of the time I was intelligence officer, for over a year.

Q. On the admiral's ship is there also more or less time taken up by formal entertainments?

A. Yes, sir, and social functions. There is a great deal
123 of social work going on which an officer has to take his share of.

Q. It is a duty more or less?

A. It is more or less of his duty.

Q. It is necessary to your departmental standing on a ship to go in the company of the officers?

A. Yes, sir; he has to take his share of such things as that.

Q. When did you work on the plans and drawings of this gunboat; what amount of your time daily was consumed in that?

A. Practically all my time except what I required for natural necessaries of life.

Q. Eating and sleeping?

A. Yes, sir; that was a work which required a great deal of constant labor and labor in thought as well as labor manually.

Q. And often when not actually engaged with your pencil in your hand——

A. I was studying up some improvement.

Q. That absorbed your mind?

A. That was constantly; I can say all my time was taken up with that work while I was working.

Q. How many hours would it be in the twenty-four?

A. I know many days I have been on my feet over ten hours.

Q. Drawing?

A. Yes, sir.

Q. That was official duty?

A. Yes, sir; because I was attached to Admiral Porter's staff to work that gunboat up.

Q. After you landed from your cruise, when did you begin to make actual working drawings for your invention; either before or after you landed?

A. I began before I landed; I began to work them up.

Q. How long before you landed—I am referring now to the working drawings?

A. I made a general plan before that. I didn't make any working drawings.

Q. You didn't make any working drawings before you landed?

A. I made drawings which led up to the minor details to get it down to actual working.

Q. That you made during the time the ship was in cruise?

124 A. The very last months of the cruise—after I went ashore.

Q. When did you begin to make working drawings?

A. I didn't do this until '89.

Q. Do you remember the part of the year?

A. The early part of the year—the spring.

Q. When did you begin to make drawings, with reference to a patent—to get a patent?

A. I used those drawings for the patent; I used working drawings. When I say working drawings I don't mean shop drawings, but drawings which would allow the machinery to be constructed so it would work.

Q. Those drawings which you began before you landed from the cruise were utilized in making the Patent Office drawings?

A. They were utilized—the continuation of them; I went from one thing to another; I was working on the same idea, but they evolved from the one idea to the other until I got to the Patent Office drawing.

Q. When did you have the Patent Office drawing begun?

A. I began this about May, '89, I think.

Q. When was the patent applied for?

A. Applied for, I think, in June or July.

Q. Were these drawings that were filed with the application for a patent made from a model?

A. No, sir; I didn't have a model.

Q. From what were they made—your own drawing?

A. Yes, sir.

Q. Made by you?

A. Yes, sir.

Q. Some of which were made before you landed from your cruise?

A. I don't mean to say they were actually made.

Q. I mean the drawings from which these Patent Office drawings were made were begun before you landed from your cruise?

A. Yes, sir.

Q. That arduous labor on the gunboat lasted how long?

A. About eighteen months.

Q. It began when?

A. It began in, I think it was, the early part of '84.

Q. And terminated when?

A. In the summer of '85, just before I went on that cruise.

Q. What was the interval between finishing that work and going on the cruise?

125 A. I think about three or four months.

Q. What were you doing during that time?

A. Taking a little rest.

Q. Were you used up?

A. Pretty nearly used up.

Q. The drawings which you began while you were on shipboard

that you worked on while the ship was here over at the navy yard, on what scale were they?

A. I don't recollect.

Q. Do you know where they are now?

A. I do not.

Q. Where were they when you last saw them?

A. The last time I saw them I sent them to the lithographer; I have lost track of them.

Q. When was that?

A. In '88, the first ones.

Cross-examination.

By Mr. PHILLIPS:

Q. I produce a letter purporting to be written by the witness, Seabury, and verified by the witness, addressed to Messrs. Wilson & Wallis, dated March 9th, 1892, and filed by your counsel with the Secretary of the Navy at that time, and ask you if you wrote that letter.

A. Yes; I have no doubt but what I wrote the letter; I am assured that it is an accurate copy.

Counsel for the defendant introduces in evidence two letters, one from Wilson & Wallis to the Secretary of the Navy, dated March 10th, 1892.

Marked "Defendant's Exhibit No. 1," of this date.

Also a letter of Lieut. Samuel Seabury to Wilson & Wallis, dated March 9th, 1892, and enclosed in the letter of Wilson & Wallis addressed to the Secretary of the Navy.

Marked "Defendant's Exhibit No. 2," of this date.

Q. I understand that you have no drawings at all to indicate the progress of your devices?

A. No, sir; they have been lost through my various movements. I have moved my house——

Q. Have you inquired for them?

A. Yes, sir; I know that a number of rough sketches I have thrown away.

Q. You say you left some with the lithographer?

A. I mean the '88 drawing I spoke of. That was a drawing for an automatic operation of a breech mechanism. It was
126 in the same line as this was, followed it right up, not the actual thing.

Q. I understand you to say that the idea of unlocking, rotating and withdrawing the block occurred to you first——

A. Prior to the cruise of '85 to '88.

Q. Did you make any drawings that conveyed that idea?

A. How do you mean conveyed?

Q. That conveyed it to anybody that saw it.

A. No drawing, such drawing as I spoke of and illustrated the other day, little sketches. I never got to the point of making a drawing which would show it clearly.

Q. You have no drawing at all?

A. No, sir.

Q. Did you ever reveal the idea to anybody?

A. No, sir; I did not do it for this reason, that it was a thing that I wanted to do, but I had not got it far enough along to show any one, until later, when I got it up in some sort of shape; I did not do that until later.

Q. When was that later?

A. Well, I can't say that I exhibited it to anybody, until I got it so it would work.

Q. That was——

A. In the early part of 1889.

Q. The first time that you exhibited anything, that would show the idea, I mean to say this very idea, to a third person, was in May, 1889?

A. About that time, when I got it so that it actually worked.

Q. I believe you said in your last examination that was May, 1889?

A. I forget whether I did or not; I think that was about the time.

Q. The idea was worked out in May, 1889, is what you have said here in the testimony.

A. Worked out finally.

Q. You had no drawing of it before that?

A. No, sir; I mean to say that all I had before that was my own idea to get it to work, but not reduced to a drawing, not reduced to a practical drawing. I had little sketches and things of that kind that I kept to myself—many a thing I have done that way.

Q. Did you have a drawing of your own that exhibited the whole idea?

A. Not prior to that; no, sir.

Q. Not prior to May, 1889?

127 A. No, sir. Those little sketches which I showed you in the other evidence were such as I had.

Q. The idea of having a lever formed by means of cams, several changes of motion, is not a new one, is it?

A. You mean new in regard to guns.

Q. New in general—in mechanics. I am not talking about guns. That a lever by means of cams should make changes of motion is not new in mechanics?

A. I should say not.

Q. How old is it?

A. I would not dare say.

Q. Older than your school days?

A. I believe it must be older than I am.

Q. Your view was to apply that old principle to a gun?

A. Yes, sir; to bring the action of a lever—to make the lever do all the work, the three motions.

Q. An old idea of lever working, making several motions—changing its motions in several different directions by means of a cam—was an old principle in mechanics—an old idea, was it?

A. The adaptation of the old plan to a new thing.
Q. Adapted to that?
A. Yes, sir; adapted to that.
Q. That you worked out in the course of these years you speak of?
A. Yes, sir.
Q. And your first drawing of your idea was in May, 1889?
A. Yes, sir; that was the first drawing which shows the actual workings of the machine; prior to that I had it in small sketches.

Redirect by Mr. JENNER:

Q. This letter of March 9, 1892, purporting to be addressed to you by Messrs. Wilson & Wallis, and which was forwarded to the Secretary of the Navy, was that letter your own composition?
A. Yes, sir; I recollect it was. I know that I submitted some such letter as that.
Q. Did you compose it or draft it?
A. Yes, sir.
Q. Did you compose it or somebody else for you?
A. No; I compose my own letters as a rule.

128 Q. At that time—at the time of composing this letter—did you know what the legal construction of the term invention was or in what the inventive act consisted?

A. No, sir; not as I have had it explained to me since. I imagined at that time that it must be a completed invention.
Q. That the invention was not made until it was completed?
A. That it was a completed thing; that it could not be a mere idea of principles or grouping of principles; it must be a complete thing.
Q. A practical working thing?
A. Yes, sir.
Q. A reduction to practice of the idea?
A. Yes, sir.
Q. And that the invention was not made until that was done?
A. That was the idea I had.

By Mr. PHILLIPS:

Q. Mrs. Levinia Wilson is the wife of the complainant Captain J. W. Wilson, who testified on a former hearing in this case?
A. Yes.

By Mr. JENNER:

Q. Where were you when you drafted this letter of March 9th, 1892?
A. I wrote one letter at home; I don't know whether that is the one or not.
Q. Look that letter over and see if that is the one that you wrote at home?
A. Yes; I wrote that letter at home.

SAMUEL SEABURY.

After signing and swearing to his testimony, the witness desired to make the statement that he did not wish to be understood, in answer to the last question on page 27 of his deposition, that he had never taken out a patent. He meant to be understood as saying that he never took out a patent for ordnance. He had previously taken out one patent for a car ventilator about 1877 or 1878. This statement is put upon the record by the examiner in the absence of counsel, at the request of the witness.

June 15, 1893.

JOHN H. KITCHEN, *Examiner.*

129 Circuit Court of the United States for the District of Maryland.

JAMES B. M. GROSVENOR *et al.*
vs.
ROBERT B. DASHIELL.

Testimony Taken at the City of New York, Before William E. Zabriskie, Notary Public, on Behalf of Complainants.

DECEMBER 27TH, 1893.

Present: Wm. A. Jenner, Wm. G. Wilson for complaimants. Samuel F. Phillips for defendants.

J. WALL WILSON, recalled, was examined and testified as follows:

1 Q. I think that you have already stated that you are acquainted with the subject of ordnance?

A. I am.

2 Q. Are you familiar with the different kinds of gas checks which are in use?

A. I have seen a number of them, and am familiar with those that I have seen.

3 Q. What is the purpose of a gas check?

A. The purpose of a gas check is to prevent the escape of the gases, from the discharge of the powder, to the rear and coming in contact with the breech block.

4 Q. Describe the De Bange gas check.

A. The De Bange gas check is made with its plunging head cone-shaped fastened to the breech block, giving it the opportunity to press back with the discharge of the gun, against the composition, which, when pressed against by the breech block, expands against the tube of the gun to prevent the gas from escaping to the rear.

5 Q. Is this composition placed between the rounding mushroom-shaped head of metal and the breech block itself?

A. It is.

6 Q. I show you Exhibit Z, and ask if that exhibit is intended to show a breech block fitted with a De Bange gas check?

A. I should say that it was.

130 7 Q. I show you Exhibit X, and ask if that is also intended to show a breech block fitted with a De Bange check?

A. I should say so.

8 Q. Now, I show you Exhibit Y, and ask the same question in regard to that?

A. This model does not show the De Bange gas check.

9 Q. This model, Exhibit Y, is then intended to show a breech mechanism adapted to some other form of gas check than the De Bange, is it?

A. I should say that it was.

10 Q. I show you, also, Exhibit L, and ask if this model is designed to show a breech block using the De Bange gas check, or is adapted to some other form of gas check?

A. It is adapted to an entirely different form from the De Bange.

11 Q. What form of gas check is adapted to be used in guns constructed in the manner shown by the models Y and L?

A. They both are adapted for cup gas checks.

12 Q. Please describe such a check.

A. A cup from four to six inches in depth with a steel base with a band of one and one-quarter steel or one, and the remaining four or five inches made of brass.

13 Q. To what size gun would these proportions apply that you have mentioned?

A. They would apply to any size gun, if properly made.

14 Q. How long would such a check be for a 5-inch gun?

A. Six inches from the base.

15 Q. Would the same breech mechanism shown by these two models, Y and L, be adapted for the use also of fixed ammunition; that is, ammunition in which the whole of the charge of powder is embraced in a brass tube?

A. Both of them would be.

16 Q. Is this, which I show you, a fair representation of the brass tube of such fixed ammunition?

A. It is with the exception of the base being of steel.

Complainants' Exhibit Cartridge Case L[1] offered in evidence and so marked.

17 Q. And is the cup check which you mentioned similar to this Exhibit L[1], excepting that it is very much shorter and does not enclose the whole of the powder?

A. That is the case.

131 18 Q. How does the cup check, or the form represented by L[1], operate to check the gas?

A. The expansion of the metal against the sides of the gun prevents the gas from escaping to the rear.

18 Q. Then to make such form of gas check work satisfactorily the metal which has expanded must contract again after the discharge is over, must it?

A. I should say so.

19 Q. What would be the consequence if it did not contract again?

A. It would be very difficult to get it out.

20 Q. Did you ever see the gun which had fitted to it a mechanism of the form shown by Exhibit L?

A. I have.

21 Q. Where did you see it?

A. First at West Point foundry, Cold Spring, N. Y., and at Sandy Hook, N. J.

22 Q. What was the size of that gun?

A. Five-inch gun.

23 Q. Was it the same gun referred to by the defendant Dashiell in his testimony?

A. I believe it was.

24 Q. Was it the only gun of that size and pattern which has been at the Sandy Hook proving ground?

A. The only one of the kind that was ever made to my knowledge.

25 Q. Did you handle that gun at the West Point foundry—opening and closing the breech block?

A. I did; a number of times.

26 Q. Did you fire it there?

A. I did.

27 Q. What form of gas check was used in it?

A. The cup that I have described.

28 Q. What was the operation of the mechanism at that time?

A. Perfect.

29 Q. Did you open and close it both slowly and rapidly?

A. Both.

30 Q. Was there, at that time, any difficulty whatever in opening or closing it, either fast or slow?

A. Without the gas check, the block could be opened and closed quicker than with the gas check in, still it worked easy and free with the gas check, when the gas check was new or with the first discharge.

31 Q. Did you hear the testimony which the defendant
132 Dashiell gave in regard to the operation of this same mechanism upon the same gun when he saw it at Sandy Hook?

A. I did not; I was not there.

32 Q. Have you read that testimony?

A. I have.

33 Q. Was there any such difficulty as he describes in his testimony manifested in your handling of the gun at the West Point foundry?

A. There was no difficulty whatever in handling it at the West Point foundry. We fired five rounds, using each time a fresh gas cup. On the sixth round we used a gas cup that had been used once before; all worked perfectly. This was in the presence of a number of gentlemen.

34 Q. How many times did you see the gun at Sandy Hook?

A. A number of times. I could hardly recollect how often.

35 Q. Did you see it shortly after it arrived at Sandy Hook?

A. I did.

36 Q. Did you handle it there?

A. I did.

37 Q. How did the mechanism then operate?

A. With the new gas check or cup it worked perfectly.

38 Q. On a subsequent occasion, when you saw the gun fired at Sandy Hook, did you observe any difficulty in getting out the gas check or cup after firing the gun?

A. I did.

39 Q. Please describe what you saw.

A. After having used the cup for two or three rounds the steel band at the base of the cup next to the side of the tube of the gun expanded and became so fixed in its place that the extractor attached to the breech block was not powerful enough to withdraw the cup. We were then compelled to use a rammer, passing through the muzzle of the gun to knock the gas cup out.

40 Q. Was there a similar difficulty in inserting the same gas check into the powder chamber on reloading the gun?

A. After the gas check had been used a second or third time it was then found quite difficult to get — into its place into the chamber of the gun.

41 Q. I show you Exhibit O, and ask whether that has ever been put into practical use?

A. It has.

42 Q. Have you seen a gun made after that pattern?

133 A. I have seen the breech mechanism of that pattern upon a gun.

43 Q. A gun of what size?

A. Six-pounder rapid-fire gun and a five-inch gun.

44 Q. Have you handled and fired the six-pounder with this design?

A. I have.

45 Q. What is its operation?

A. Perfect.

46 Q. Where is this six-pounder now?

A. It is either at Sandy Hook or on its way there.

47 Q. For what purpose?

A. For a trial test and a competition with other guns, under the direction of the War Department.

48 Q. Where did you see the five-inch gun with the mechanism similar to that of model O?

A. First at the West Point foundry, Cold Spring, and at the Sandy Hook proving ground.

49 Q. Did you handle the mechanism of that gun, also?

A. I did.

50 Q. Describe the ease with which it worked, or the difficulty, whichever it may be.

A. There has been no difficulty found in working this gun, to my knowledge.

51 Q. What gas check is employed on that 5-inch gun?

A. The De Bange.

Cross-examined by Mr. PHILLIPS:

52 X Q. Where, as is understood, is Mr. Seabury at present?

A. On board of the U. S. steamer "Philadelphia," in the port of Honolulu.

53 X Q. Were you on board of the "Philadelphia" before she left?

A. I was not.

54 X Q. Where, as is understood, is Mr. Dashiell at present?

A. I believe he is on board of U. S. steamer "New York" at sea.

55 X Q. Were you on board the "New York" before she sailed?

A. No.

134 Redirect:

56 R. D. Q. In your testimony in regard to the working of the five-inch gun with mechanism corresponding to Exhibit L as you saw it fired at the West Point foundry and the Sandy Hook proving ground, you spoke of the gas check or cup which was used in firing the gun. Do you know how many of such cups or gas checks there were in use in firing that gun?

A. Ten only were made. The idea, I believe, was that the gas checks could be used from fifty to one hundred rounds each without trouble, but after firing as we were compelled to do—only having the ten gas checks, two or three rounds—they began to stick, and it was with great difficulty we could get them out of the gun. For that reason the gun as it stood and for the want of a proper gas check was useless.

57 R. D. Q. The gun had been constructed and adapted for the use of this particular gas check, had it?

A. It had been for that particular gas check and no other.

58 R. D. Q. Then the result of the difficulty experienced with the gas check was that the gun was not of practical use without such alteration in the gun itself as would adapt it for a different gas check. Is that what you mean?

A. Without the alteration of the gas check the gun was of no practical use.

59 R. D. Q. But you do not mean that that was due to anything defective in the breech mechanism?

A. There was no difficulty experienced at all with the breech mechanism for opening and closing the block that I discovered at any time.

60 R. D. Q. Were these gas checks that were actually used in this gun expensive to make?

A. In large numbers they could have been made very cheap. In this gun they were expensive.

61 R. D. Q. How much did they cost?

A. To the best of my recollection they cost about $17 apiece.

J. WALL WILSON.

EDWARD H. LITCHFIELD, sworn and examined as a witness for the complainant, testified as follows:

1 Q. Where do you reside?

A. Brooklyn, Kings county.

135 2 Q. Your age and occupation?

A. Forty-eight years of age; by profession I am a lawyer, but my occupation is taking care of my private affairs.

3 Q. State what familiarity, if any, you have with matters pertaining to ordnance.

A. I have always been very fond of arms and artillery. I have studied them both here and in Europe; I have owned a great many fire-arms; I have been a great rifle-shooter and killer of large game. As such I have studied the effects of rifle projectiles and the construction and use of cartridge cases or cartridge shells. I was even led to invent a repeating rifle a great many years ago—I think about the year 1866 or 1867. I carried that invention to the working point and perfected a model—an actual model.

4 Q. Did you see at Sandy Hook proving ground the 5-inch gun with breech mechanism similar to that shown by model L, which was mentioned by J. Wall Wilson in his testimony just given?

A. I did.

5 Q. Did you handle it yourself, opening and closing the breech block?

A. Yes; repeatedly.

6 Q. How did it work when there was no gas check inserted in the gun?

A. It worked with perfect ease and facility.

7 Q. How did it work when a gas check was inserted in the gun?

A. It worked with the same facility.

8 Q. Now, how was it after the gas check had been used several times as to the ease or difficulty of withdrawing the gas check again?

A. After the so-called gas checks had been fired several times and reloaded they stuck in the gun.

9 Q. To what extent did they stick?

A. I think a rammer had to be used in extracting them.

10 Q. What, in your opinion, was the cause of the sticking of this gas check?

A. This gas check resembled a piece of the butt end of an ordinary cartridge case. I picked up several of these pieces after the firing and the sticking, and I found they consisted of a brass cylinder fastened in some manner to a steel or iron disk or head. In my judgment the sole difficulty was that the brass tube was not elastic enough, and that the steel head was too soft. They did not stick after the first explosion, but by the continued firing the

136 brass expanded and did not retract itself, and the steel head was upset or flattened by the explosion. The whole difficulty was one of fabrication of the gas check, and was no fault of the gun.

11 Q. Then, these cups or gas checks were used over and over, were they, in firing the gun?

A. They were used repeatedly.

Cross-examined:

12 X Q. Were you aboard the "Philadelphia" before she sailed?

A. No.

13 X Q. Were you aboard the "New York" before she sailed?

A. Yes.

14 X Q. Did you observe her armament?

A. Yes.

15 X Q. Of what did it consist?

A. I observed it as an amateur only, and there were four large guns in turrets, and a number of broadside guns. My recollection is that they were all 6-inch guns, but I am not positive.

16 X Q. Did you observe the breech-block mechanism?

A. I did.

17 X Q. What was it?

A. It was very similar to the Seabury mechanism.

18 X Q. Was it known as the Dashiell mechanism?

A. I so understood it.

18 X Q. How many guns were there?

A. I think the mechanism was applied to all the large guns. There were a number of secondary guns—Hotchkiss mainly.

20 X Q. How many turrets and broadside guns were there?

A. There were two turrets, each containing two large guns, and, to the best of my recollection, because it was about a month ago that I saw the ship, there were about six guns on the broadside of the 5 or 6 inch pattern.

21 X Q. That is, three on a side?

A. Six broadside guns on a side.

22 X Q. Do I understand that the turret guns were 6-inch guns?

A. I went through the ship as an amateur, and not as an expert. My recollection is that all the large guns were the same calibre and of the same breech mechanism.

137 23 X Q. Did you see Mr. Dashiell on board the "New York"?

A. I did.

24 X Q. Did you ask him whether there was any of his mechanism aboard?

A. He so stated to me without my asking him.

25 X Q. You did not ask him?

A. I did not put the question to him.

26 X Q. What did you say to him, if anything?

A. I had an extended conversation with him—Dashiell; he was on duty at the time, and took me over the portion of the ship of which he had momentary charge; he exhibited the guns to me, handled them for me and explained the mechanism, stating, in the course of conversation, that it was his invention, and, now that I think of it, I did ask him, when we first saw the guns, if they were his invention, and he said they were.

27 X Q. Were the guns that he exhibited to you, in mechanism broadside guns?

A. The guns that he exhibited and worked were only broadside guns. I should add that, as Dashiell was on duty, he put me in charge of a sailor, who showed me the rest of the battery, and who, also, operated some of these guns, stating that they were the invention of Dashiell.

28 X Q. The guns that were shown to you by the sailor—were they broadside guns?

A. They were broadside guns.

EDWARD H. LITCHFIELD.

HENRY F. NEWBURY, being called as a witness on behalf of complainant-, and duly sworn, testified as follows:

1 Q. What is your name, age, residence and profession?

A. Henry F. Newbury; 51 years old; residence, 142 Park place, Brooklyn, N. Y., and am by trade a machinist; but my time for the past fifteen years has been more or less taken up with matters pertaining to patents and patented inventions.

2 Q. What experience have you had in the examination of letters patent for inventions, and in the consideration of questions pertaining to mechanical inventions?

A. When a young man I learned the trade of a machinist, and I worked at that trade more or less up to a comparatively short time, and while so engaged became familiar with mechanical prin-
138 ciples and their application in machines, and also had frequent occasion to design various kinds of mechanisms and machines for performing various kinds of work in the mechanical arts.

While engaged at my trade I also became familiar with the making and reading of mechanical drawings, and have made many such drawings with my own hands.

For the past fifteen years I have devoted a very considerable portion of my time to matters pertaining to patents and patented inventions, and while so engaged I have read the specifications and drawings of large number of letters patent, both of this and foreign countries, to learn wherein certain mechanisms or structures under consideration differed from or resembled other mechanisms or structures shown in the various letters patent then under consideration. During the last-named period of time I have frequently been called upon to testify in the United States courts as an expert witness, and have there been called upon to point out the resemblances and differences between the various mechanisms or structures then under consideration.

For the past five years or so my time has been devoted almost altogether to pointing out the differences and resemblances between various mechanisms or structures, either in court or elsewhere, including, of course, the necessary study and experiment to enable me to definitely determine what such differences or resemblances were.

I have had granted me some 25 patents on inventions of my own.

3 Q. Have you read and examined the specification and drawing of U. S. letters patent to Lieutenant Seabury, No. 425,584, dated April 15th, 1890, being complainants' patent in suit, and do you understand the same?

A. I have repeatedly read, and carefully studied, a printed Patent Office copy of the specification and drawings of the patent inquired about, and believe that I understand the construction and operation of the breech mechanism therein shown and described.

4 Q. Have you read the deposition of Lieutenant Seabury made in this case on behalf of the complainant-, and have you read copies of the depositions made in this case on behalf of the defendant, by the defendant and by Mr. Bartlett, Mr. Dodge, Mr. Worsey and Mr. Hough?

A. I have.

5 Q. Have you examined the models which have been put in evidence in this suit, viz., Plaintiffs' Exhibits L, and the cartridge
139 case there in L^1, also Exhibits N, M and O, and Defendant's Exhibits X, Y, Z, and the Exhibit Model of the Nordenfelt Gun shown in English patent No. 7195, dated May 17, 1887, and do you understand the construction of the same?

A. I have carefully examined the several models inquired about and believe that I understand the construction and operation of the same.

6 Q. Have you read and examined the letters patent which have been put in evidence in this suit and are referred to in the various depositions to which your attention has already been called, and which depositions you have already stated that you have read, and do you understand the construction of the devices which are shown and described in the said letters patent respectively?

A. I have repeatedly read and carefully studied the several letters patent inquired about, and believe that I understand the construction and operation of the several mechanisms therein shown and described, so far as such description goes.

7 Q. Without confining yourself strictly to the phraseology of claim 1 of the Seabury patent in suit, will you explain what you understand to have been Lieutenant Seabury's invention as the same is described in his said patent, and as it is particularly referred to in the 1st claim thereof, and in answering this question will you bear in mind the state of the art as shown in the alleged anticipating patents which have been referred to?

A. The invention shown and described in the Seabury patent in suit, and which is particularly pointed out in claim 1 thereof, relates generally to an improvement in breech-loading cannon, that is, cannon which are provided with a breech block to open and close the breech for the purposes of loading and firing the same. In order to manipulate or handle such breech block, some mechanism is employed to move such block from one desired position to another, to thus expose and reclose the breech of the gun, and it is to such mechanism that the said improvement relates.

Various forms or shapes of breech block are used in breech-load-

ing cannon, but the improvement set forth in the patent in suit relates generally to one class or kind of breech blocks, which are known or termed as the mutilated or slotted screw form of block. These slotted or mutilated screw breech blocks consist of a block or plug of metal, which is first provided with screw-threads in
140 the usual manner, and the opening into the breech, which is designed to receive the block or plug, is likewise provided with screw-threads so that the block can be screwed into the breech of the gun and held there by the interlocking of the screw-threads one with the other. This would require a large number of turns or complete rotations of the breech block in order to either secure it in place or remove it from the breech, and in order to facilitate this operation the screw-threads upon the breech block or plug are cut away in lines longitudinally to the axial line of the gun. This cutting away of the screw-threads extends to about one-half of the circumferential area of the breech block and also extends to the depth of such threads. This cutting away of the screw-thread form- in effect slots having the area above named and extending longitudinally of the plug. The screw-threads in the breech of the gun are likewise cut away and to the same extent, thus forming slots which are in extent equal to the screw-threads remaining upon the screw-block, so that such screw-threads upon the block enter the slots or mutilated screw-threads of the breech, and the remaining portion of the screw-threads upon the breech likewise enter the slots or mutilated portion of the thread of the breech block.

By reason of this slotting or mutilating of the screw-threads of the breech block and the breech of the gun, the breech block can enter the breech of the gun without rotation, and only a partial turn or rotation of the block is required for the interlocking of the remaining portions of the screw-threads of the breech block and breech of the gun to securely lock or fasten the breech block in place.

Breech blocks thus having their screw-threads slotted or mutilated are of two forms—viz., conical or step and cylindrical form—and cannon provided with such breech blocks are sometimes known as cannon of the slotted or mutilated screw principle of mechanism.

The cylindrical form of slotted or mutilated screw breech block is the preferred form, owing to the fact that it affords greater surface of screw-threads, and is consequently of greater strength than the other form. Slotted or mutilated breech blocks are, as a rule, removed bodily from the breech of the gun onto a tray or carrier which is suitably arranged to receive the breech block as it is withdrawn from the breech, and when it has so received such block the two are swung aside so as to expose the breech of the gun for the purpose of loading the same.

141 The invention particularly pointed out in claim 1 of the patent in suit relates specially to the improvement of the mechanism by means of which slotted or mutilated screw breech blocks are thus withdrawn from the breech of the gun and then replaced therein, and is intended to facilitate such operation and accomplish

the same in the shortest space of time and with the least expenditure of force.

Such invention consists in the combination with a breech-loading cannon which is provided with a breech block of the slotted or mutilated form and which is withdrawn in a rearward direction to remove it from the breech of the gun, of a breech-block carrier which is hinged to the breech, and a device composed essentially of a lever which is at one point hinged to the breech of the gun, and at another point connected to the breech block, and adapted to move independently of the breech-block carrier when withdrawing the breech block onto the carrier or pushing it therefrom, and to also move with the breech-block carrier when the breech block is upon the carrier and is to be swung aside. This device which is composed essentially of a lever, is termed in said claim 1 "a breech-block retractor," and is described in the specification of the patent in suit as composed of two arms, which are joined together so as to in effect be but one arm, which is hinged to the breech of the gun by a shaft or pintle designated in the specification of such patent as E. Such arm is connected to the breech block through a ring by means of which the ring remains stationary when the breech block is partially turned or rotated to lock or unlock it from the breech. This ring is designated in the patent in suit as G¹, and the two arms forming the single arm therein designated as G.

The specification of the patent in suit, after describing the construction of these arms and ring, says:

"The arms G, the ring G¹, and the above-described connections between them constitute what may be termed a 'breech-block retractor.'"

The tray or carrier upon which the breech block is withdrawn to swing it aside is termed in said claim 1 "a breech-block carrier."

No one of the several letters patent which are referred to in the question as alleged anticipating patents shows a combination of devices, as above explained, with a breech-loading cannon provided with a slotted or mutilated screw breech block.

8 Q. What advantages arise in the practical use of cannon,
142 either on shipboard or in the field, intended for rapid firing, from the employment of Lieutenant Seabury's invention referred to in the first claim of the patent in suit?

A. The invention particularly recited in claim 1 of the patent in suit permits of the breech block being operated by the fewest possible number of parts and by the least expenditure of force. This is accomplished by reason of the small extent of frictional contact required between the means employed to operate or handle the breech block and the breech of the gun, or in other words the small extent of frictional contact into which dirt or other foreign substances can enter, under the exceptional conditions in which such mechanisms are necessarily used, permits the mechanism to be operated by the least expenditure of force and the least liability of the derangement or failure of such mechanism.

The invention of said claim 1 permits of the breech block being handled under the different positions which it necessarily assumes

by reason of the motion of the vessel when in action, and also from the differing positions the cannon is placed in when hurriedly moved from one location to another in field service.

It will be remembered that when in battle and moving from one position to another as becomes necessary, and the conditions which are present during a battle, renders it very important that the mechanism shall be capable of being worked during the excitement of battle, and with the presence of dirt and other foreign matter, to a greater or less extent, in the mechanism, and that such mechanism shall be reliable under such conditions. It is well known that such a mechanism is liable to have more or less dirt and other foreign substances thrown into it by shot and shell thrown by the enemy, as well as by the operation of the person handling it, or during its movements from one location to another, and it is under these extraordinary circumstances that the mechanism is expected to work, and if it does not, it fails at the most critical time or at the time when it is most needed. From this it will be seen how important it is that the points of frictional contact or connection shall be few in number and small in extent, and of such a character that the presence of dirt or other foreign substances shall interfere as little as possible with the operation of the mechanism and also that when dirt or other foreign substances are thrown into or between the parts of the mechanism that it shall interfere as little as possible with the
143 working of such mechanism, and also, that such mechanism shall work with the least expenditure of force.

9 Q. In view of the opinion expressed by Messrs. Bartlett and Dodge on the patents referred to by them, state whether or not the Dashiell gun, as constructed and operated as shown in Defendant's Exhibit Y, contains the invention described in the Seabury patent in suit and particularly referred to in the first claim, and give the reason on which any opinion you express is based?

A. The Dashiell gun as shown in Defendant's Exhibit Model Y does in my opinion contain in substance the invention shown and described in the patent in suit and particularly pointed out in claim 1 thereof.

In each there is a breech-loading cannon provided with a slotted or mutilated breech block which is withdrawn in a rearward direction onto a breech-block carrier, and then swung aside to open or expose the breech of the gun for loading purposes, and which is again swung in front of and the breech block is pushed into the breech of the gun to close the same for firing purposes.

In each there is a breech-block carrier, which is hinged to the breech of the gun, and which is adapted to receive the breech block upon it and to move or swing the same aside and return it again in front of the breech of the gun.

In each there is a device composed essentially of a lever, which is at one point hinged to the breech of the gun, and at another point connected to the breech block and adapted to move independently of the breech-block carrier when withdrawing the breech block onto the carrier or pushing it therefrom, and also to move with the

breech-block carrier when the breech block is upon the same and is to be swung aside when opening or closing the breech.

In each the several devices or elements are combined together in substantially the same way to perform the same work, and are composed of substantially the same means.

In each the several devices or elements individually serve substantially the same functions in substantially the same manner.

When forming the above opinion I did not overlook the fact that in the form of mechanism used to illustrate the invention of said claim 1, the breech-block carrier and the device composed essentially of a lever, and termed in said claim 1 a breech-block retractor, are both hinged to the breech by means of a single shaft or pintle, while in the Dashiell gun as shown in said Defendant's Ex-
144 hibit Model Y the corresponding device composed essentially of a lever, and which I will term the breech-block retractor of that gun, and the breech-block carrier are not both hinged to the breech by a single shaft or pintle, but I did not deem this difference a material one when considering the substantial identity between the invention particularly recited in said claim 1, and the said Dashiell gun, because in each case, for all the purposes of the invention recited in said claim 1, the breech-block retractor of the said Dashiell gun, as shown in said model Y, is as effectually hinged to the breech of the gun, when it serves the purposes of a breech-block retractor, as is the case in the mechanism used to illustrate the invention set forth in said claim 1—that is, the breech-block retractor of the Dashiell gun, as shown in said model Y, when acting as a retractor for the breech block, is hinged to the carrier at a point immediately adjacent to the shaft or pintle by means of which the breech-block carrier is hinged to the breech, and this point of hinging the breech-block retractor to the carrier is as immovable when withdrawing the breech block onto the carrier or pushing it therefrom as it would be if such retractor was hinged directly upon the same shaft or pintle that is used to hinge the breech-block carrier to the breech.

Again, there is nothing whatever in the said Dashiell gun which prevents the said breech-block retractor from working in substantially the same way as the breech-block retractor in the mechanism used to illustrate the invention of said claim 1 works. That is, this difference in the point or points of hinging the breech-block retractor to the breech of the gun does not in any way affect the operation of such retractor when withdrawing the breech block onto the carrier or pushing it therefrom.

Furthermore, the breech-block retractor of the Dashiell gun, as shown in said model Y, could have its axial line of hinging made coincident with the axial line of hinging the breech-block carrier of that model to the breech, so that a single shaft or pintle could be employed for hinging the carrier and retractor to the breech, the same as is done in the mechanism used to illustrate the invention of said claim 1, and the doing of this would not in any way affect the operation of the several parts of the Dashiell gun as shown in said model. Therefore, there is nothing in the combination of the

elements found in the Dashiell gun, as shown in said model Y, which requires that the breech-block retractor shall be hinged
145 to the breech of the gun at a point differing somewhat from that at which the breech-block carrier is hinged.

This fact alone compels me to the opinion that the difference above pointed out between the mechanism used to illustrate the invention of said claim 1 and the Dashiell gun, as shown in said model Y, is wholly immaterial and not of the slightest consequence when considering the substantial identity between said invention and said gun.

I also did not overlook the fact that the breech-block retractor in said model Y is connected to the breech block in a somewhat different manner from what the breech-block retractor in the mechanism used to illustrate the invention of said claim 1 is therein connected to the breech block, but I did not deem this difference material, because in each case the breech-block retractor is connected to the breech block in such manner as that the breech block can be partially turned or rotated to lock and unlock the same from the breech of the gun without disturbing the connection between the retractor and the breech block, and yet have the connection continuous and not broken during the time that the breech block is rotated or turned and withdrawn from or pushed into the breech of the gun.

This connection in each case serves the same function, and serves it in the same way, therefore it is manifestly an immaterial difference when considering the substantial identity between the said invention and the said gun.

I also did not overlook the fact that the breech-block retractor found in the illustration used to illustrate the invention is composed of two arms, which are secured together so as to form a single-forked arm, while in the Dashiell gun, as shown in said model Y, the corresponding breech-block retractor is composed of a single piece, and of somewhat different shape from that of the said forked-arm retractor found in the mechanism used to illustrate the invention of said claim 1, but I did not deem this difference material when considering the substantial identity of said invention and said gun, because said difference in no way affects or modifies the action or operation of the two breech-block retractors.

In this connection I desire to call attention to the fact that Mr. Dashiell refers to the breech-block retractor of said model Y as a bell-crank lever—that is, a lever which is of bent or elbow shape, having its fulcrum at the point of bend. This breech-block retractor of said model Y is not, as a matter of fact, what is
146 known to mechanics as a bell-crank or elbow lever, because it does not have its fulcrum at the point of bend or elbow of the lever, but it does have its fulcrum at one end of such lever, and because of this fact it is not what is known as a bell-crank lever. It is true that such retractor is of a bent shape, such as is many times found in bell-crank or elbow levers, but this fact does not make such lever what is known to mechanics as a bell crank or elbow, and for the reason just stated.

This lever which forms the essential part of the breech-block retractor of said model Y is of the same character or class as the lever formed by the two arms in the mechanism used to illustrate the invention of said claim 1 is—that is, in both cases the power is applied between the fulcrum and the weight, and each is known to mechanics as a lever of the third class, because of the fact that the power is applied to the lever between the weight and the fulcrum.

In connection with the location of the fulcrum of the lever forming the essential part of the breech-block retractor of said model Y, I call attention to the fact that said fulcrum point is as stationary, positive and rigid as it would be if its fulcrum point were upon the same shaft or pintle that is used to hinge the breech-block carrier to the breech of the gun, and also that such fulcrum point is never disturbed while the breech-block retractor is serving its function as a retractor to withdraw the breech block onto the carrier and to push it therefrom.

Because of the above fact I am compelled to the opinion expressed at the beginning of this answer, as well as to be of the opinion that whatever differences there may exist between the Dashiell gun as shown in said model Y, and the mechanism used to illustrate *trate* the invention of said claim 1 are immaterial differences and are not of the slightest consequence when considering the substantial identity between the said gun and the said invention.

10 Q. How far do you understand the defendant's witnesses Messrs. Bartlett and Dodge agree with the opinion you have just expressed as their views are found in their depositions?

A. Messrs. Dodge and Bartlett, defendant's experts, under certain circumstances I believe agree with me in substance as to the opinion just heretofore expressed. Under what Mr. Bartlett is pleased to term a "broad construction" he in substance agrees with me as will be seen by what he says when comparing the said Dashiell
147 gun with the invention set forth in claim 1 of the patent in suit, which is as follows:

"I therefore find in the reading of the patent, as I understand it, and in its relation to the construction of the Dashiell gun, which I have examined, that independently of all other matters claim 1 of the Seabury patent would in my opinion cover the construction of the breech mechanism of the Dashiell gun."

Again in another answer where Mr. Bartlett was asked to state in what respect the claims of the patent in suit apply to the Dashiell gun he saw at the gun foundry in Washington he says, when dealing with claim 1 of the patent in suit, and especially referring to the element or device known as a breech-block retractor, says:

"I do not find precisely this construction in the Dashiell gun or model; but I find what may fairly be called a breech-block retractor hinged to the breech-carrier instead of to the breech. There is little difference in the mode of operation of withdrawing the breech plug from the breech and depositing it upon the carrier. I should not consider this difference a vital one; and if claim 1 in the Seabury patent is entitled to the broadest construction of which

its language is capable, I should consider that it covers the construction of the Dashiell gun."

Mr. Dodge, defendant's other expert witness, when asked if, in his opinion, the Dashiell gun contained the subject-matter of Seabury's claim 1, used the following language in partial answer thereto:

"If the Seabury claim No. 1 is to be construed in the light of prior art, it must be so limited, in my opinion, that it will not include the structure shown in the Dashiell gun. In my opinion, if the claim of Seabury is to be sufficiently broad or generic in its character to cover the Dashiell gun, it will be fully anticipated by the Nordenfelt patent."

From this language of Mr. Dodge's I understand that — claim 1 of the patent in suit be broadly construed, then it would cover the Dashiell gun.

Under other and different circumstances which Messrs. Dodge and Bartlett assume, they would not agree with me in the opinion expressed in my last preceding answer.

To the above extent I believe Messrs. Dodge and Bartlett agree with my opinion just referred to.

Adjourned until December 28th, at 10.30, at the same place.

148 NEW YORK, *December 28th*, 1893.

Met pursuant to adjournment.

Present: Counsel as before.

HENRY F. NEWBURY being further examined by Mr. JENNER:

11 Q. Please state whether or not the Seabury invention referred to in the first claim of the patent in suit, is found in any of the alleged anticipating patents which have been mentioned, or which have been put in evidence by the defendant, and give your reasons.

A. The invention particularly referred to in claim 1 of the patent in suit, in my opinion, is not found in any of the alleged anticipating patents which have been referred to by defendant's experts or which have been offered in evidence herein.

In fact, no one of such alleged anticipating patents or all of them taken together have any special bearing upon the invention described and shown in the patent in suit and particularly referred to in claim 1 thereof.

The following are the alleged anticipating patents as they were offered in evidence on behalf of the defendant herein:

British patent to Joseph Farcot, No. 3402, of 1887.

British patent to J. B. G. A. Canet, No. 7434, of 1888.

British patent to John Fielding, No. 14602, of 1888.

British patent to H. R. Whinfield and James Horme, No. 15188, of 1888.

British patent to Thorsten Nordenfelt, No. 7195, of 1887.

British patent to J. B. G. A. Canet, No. 7435, of 1888.

British patent to Albert Sauvee, No. 9813, of 1887.

British patent to Albert Sauvee, No. 9453, of 1887.

U. S. patent to Shenkle & Saroni, No. 9943, dated August 16, 1853.

U. S. patent to J. W. Cochran, No. 26256, dated November 29, 1859.

U. S. patent to W. F. Goodwin, No. 143,310, dated June 14, 1864.

U. S. patent to Driggs & Schroeder, No. 360,798, dated April 5, 1887.

U. S. patent to T. Nordenfelt, No. 384,537, dated June 12, 1888.

I will refer to the above-named letters patent in the order in which they are given above, and will briefly describe the mechanism or structure shown and described therein, and will also give my
149 reasons why each individual patent does not contain the invention particularly pointed out in said claim 1 of the patent in suit.

The Farcot British patent No. 3402, of 1887, shows and describes a breech-loading cannon provided with a breech block of the slotted-screw form or principle, and having a breech-block operating mechanism for withdrawing the breech block from the breech and returning it therein for the purposes of loading the gun. In this breech-block operating mechanism of the said Farcot patent there is a carrier hinged to the breech of the gun by means of a shaft or pintle. Upon this shaft or pintle there is secured a gear wheel provided with spirally cut teeth, and the shaft and gear wheel revolve together. The breech block is provided with an extension, as seen in Fig. 3 of the drawings, which extension bears a segmental rack, the teeth of which are adapted to mesh with the teeth upon the gear wheel. This segmental rack is arranged circumferentially of the breech block, so that, as the gear-wheel teeth mesh with the teeth of the rack, the breech block is rotated or turned sufficiently to lock or unlock it to or from the breech. The breech block is also provided with another rack, which extends longitudinally of the breech block, and whose teeth are arranged to mesh with the teeth of the gear wheel whenever they are brought in proper position for the purpose. By means of this longitudinal rack, and the gear wheel meshing therewith, the breech block, after it is unlocked, is withdrawn from the breech of the gun and returned thereinto. This shaft, with the gear wheel mounted thereon, rotates in suitable bearings attached to the breech of the gun, and the axial line of such shaft is arranged at right angles with the axial line of the gun and breech block. This shaft is provided with means for attaching a crank arm and handle to it, so that it may be rotated in the desired direction and to the desired extent to first partially turn the breech block to unlock the thing and then to withdraw the breech block out of the breech and onto the carrier or tray, and as the breech block is stopped in its movements relatively to the tray, the continued rotation of the shaft and gear wheel causes the tray with the breech block upon it to be swung aside in order to expose the breech of the gun for the purpose of loading the same. When the loading is completed this shaft with the gear wheel upon it is caused to rotate in an opposite direction when the breech block is returned to

the breech of the gun and locked therein by the rotation of said shaft and gear wheel.

From this I think it will be clearly manifest that the
150 breech-operating mechanism of this Farcot British patent is not provided with a device which is composed essentially of a lever which at one point is hinged to the breech of the gun, and at another point connected to the breech block, so that through a direct pull of such device upon the breech block through its hinging to the breech and connection to the same, withdraws the breech block from the breech onto the carrier and pushes it therefrom into the breech again by pushing the same through the same hinging and connections as heretofore described.

A revolving gear wheel meshing with the rack is manifestly not such a device as is required for one of the essential elements or devices of the invention of said claim 1, and therefore this British Farcot patent lacks an essential element or device of said invention, and such Farcot patent, no matter what else it may show, so long as it does lack one of the essential elements or devices of that invention, can have no bearing whatever upon the invention particularly pointed out in said claim 1 of the patent in suit.

The Canet British patent No. 7434 of 1888 shows and describes a cannon provided with a breech block of the slotted or mutilated screw form or pattern, but having the slotted or mutilated portions of the screw-threads running spirally around the breech block instead of longitudinally, as before explained. This Canet British patent No. 7434 of 1888 is provided with a breech-block operating mechanism, and the specification of said patent contains the following statement regarding such breech-block operating mechanism:

"The present invention relates to improvements on the apparatus described in patent No. 9453, dated 4th, July 1887, and consists in a new arrangement of the breech screw and the firing mechanism."

This British patent No. 9453 is one of the alleged anticipating patents, and will be referred to in detail by me in the order heretofore stated.

The breech-block operating mechanism of this British Canet patent No. 7434 consists, generally stated, of providing the breech block itself with helicoidal or screw-shaped slots or recesses, two in number, and arranged on opposite sides of the block. These two helicoidal or screw-shaped slots or recesses change their pitch near the outer end of the breech block, so that a portion of each slot or recess is of the same pitch as that of the screw-threads themselves on the breech block and in the breech of the gun, and this portion extends far enough to permit of the breech block being
151 rotated sufficiently to unlock it from the breech of the gun when the pitch of the said slots or recesses changes to that of the spirally slotted or mutilated portions of the screw-threads of the breech block, so that such slots or recesses and the mutilated or removed portions of the screw-threads are of the same pitch or run around the breech block spirally a given distance apart.

The breech-block carrier or tray in this Canet breech-operating mechanism is in the form of a ring having a tubular-shaped open-

ing, in which the breech block is always mounted and through which the breech block moves when it is withdrawn from the breech of the gun. This breech-block carrier is provided with studs or rollers placed so as to work within the helicoidal or spirally formed slots or recess in the breech block, and by means of which the movements of the breech block are controlled when locking and unlocking the same to and from the breech of the gun, and, also, when withdrawing the breech block from the breech, and returning it thereinto.

The breech block of this Canet mechanism is provided with a handle attached to the block in such manner that the block can be rotated by the direct application of the power to this handle, and the block continues to be turned or rotated until it is fully withdrawn from the breech, so that it rests wholly within the ring-shaped carrier when such carrier and breech block can be swung aside to expose the breech for loading purposes. Upon the first application of power to the handle attached to the breech block, the block is rotated to unlock it from the breech, and the studs or rollers at such times work in that portion of the helicoidal slots or recesses that are of the same pitch as that of the screw-threads themselves, and when the breech block is unlocked from the breech the said rollers or studs enter that portion of the helicoidal slots or recesses which extend along the block and are of the same pitch as the mutilated or removed portions of the screw-threads are, and as they move along this latter portion of such slots or recesses the breech block is forced outward by the pitch of such slots or screws until the studs reach the ends of the slots and the breech block is wholly within the ring or the breech-block carrier, when such carrier can be swung aside. The reversal of these operations returns the breech block to the breech and locks it therein.

From this it will be seen that by the continued application
152 of force from the very beginning of the unlocking operation until the breech block is fully withdrawn from the breech, the breech block is being acted upon in a direction tending to withdraw it from the breech of the gun, and also that the unlocking and withdrawing of the breech block is not done by the waiting of one portion of the mechanism until another portion is brought into action, which kind of action one of defendant's witnesses has herein styled a step-by-step or lost-motion action.

It is manifest that this British Canet patent No. 7434 of 1888 does not contain a breech-block retractor which is composed essentially of a lever, being hinged at one point to the breech of the gun and at another point connected to the breech block so that the breech block is withdrawn in a rearward direction onto the carrier and pushed therefrom by a pulling or pushing action, and, therefore, the said Canet British patent No. 7434 is unprovided with one of the essential elements or devices of the invention of said claim 1 of the patent in suit. By reason of this fact this Canet British patent can have no bearing whatever upon the said invention particularly pointed out in said claim 1.

So far as the general operation of the breech-block operating

mechanism of this Canet patent No. 7434 of 1888 is concerned, the handle heretofore referred to as being attached to said breech block might be the simplest form of handle which could be permanently attached thereto, and by which force could be applied in a direction tending to rotate the breech block shown in that patent.

The Fielding British patent No. 14602, of 1888, shows a breech-loading cannon provided with a breech block of the slotted or mutilated screw pattern or principle, the slotted or mutilated portions of which are arranged longitudinally and parallel with the axis of the block and gun.

The cannon shown in this Fielding patent is provided with a breech-block carrier or tray of the ring-shaped form heretofore referred to, and the breech block is alway- connected with such carrier no matter what its position may be relatively to the other parts of the gun.

The breech block of this Fielding mechanism has mounted in it a shaft, the axial line of which is parallel with the axial line of the breech block and gun. This shaft is mounted to rotate in the breech block and bears upon its inner end a screw form of pinion and upon its outer end it is provided with a crank arm and handle, and also an extension in the form of a segment of a gear wheel.

When the breech block is locked within the breech of the
153 gun this segment of a gear wheel attached to this shaft and crank arm meshes with a segmental rack arranged upon the breech of the gun so that by the turning of the crank arm and shaft and the meshing of the segment of the gear with the segment of the rack the breech block is given a partial turn to unlock it from the breech of the gun, and by the continued revolutions of the shaft and crank arm the screw-pinion upon the end of the shaft is brought into contact with a worm form of rack arranged longitudinally in the breech of the gun so that the screw-teeth of the pinion and the worm teeth of the rack coact together to withdraw the breech block in a rearward direction. This longitudinal rack attached to the breech of the gun extends beyond the breech of the gun in a direction parallel with the axis of the same up to the centre of the pivot upon which the breech-block carrier is hinged to the breech, and then continues in circular form, the axial line of such hinge being the centre of the circle, so that, as soon as the breech block is fully withdrawn from the breech and rests wholly within the carrier, the continued revolutions of the crank shaft will cause the carrier, by meshing of the pinion with the circular portion of the rack, to be swung aside to expose the breech of the gun for loading purposes.

By reversing the direction of movement of this crank arm, shaft and screw-pinion the breech block is returned to the breech and locked therein.

From this it will be manifest that this Fielding patent does not show and describe a breech-block retractor composed essentially of a lever which at one point is hinged to the breech of the gun and at another point connected with the breech block as heretofore explained. Therefore, it lacks an essential device or element of the invention particularly set forth in claim 1 of the patent in suit, and

consequently this Fielding patent can have no bearing whatever on the invention set forth in said claim 1.

The British patent to Whinfield and Horn, No. 15188, of 1888, relates largely to means for handling heavy guns, and it shows and describes various forms of hydraulic mechanism for the manipulation of cannon generally, but in certain figures of the drawings said patent shows a form of breech-operating mechanism. The specification of this Whinfield & Horn patent on pages 7 and 8 thereof states as follows:

"We sometimes employ the devices described in the specifications of the following former letters patent, viz: No. 3402, dated 5th March, 1887; No. 9813, dated 12th July, 1887, and No. 7435, dated 28th March, 1888."

154

I have already described the breech-operating mechanism of the first named of these letters patent, viz., that of the Farcot British patent No. 3402 of 1887, and as the others named are offered in evidence herein I will refer to them in detail when reached and will simply say that there is nothing shown or described in this Whinfield & Horn patent which, in my opinion, has any bearing whatever on the invention particularly pointed out in claim 1 of the patent in suit.

My reason for this opinion, so far as concerns the Farcot British patent No. 3402, will be found in connection with my description of the mechanism of that patent heretofore given, and my reason, so far as concerns the other letters patent named in this Whinfield & Horn British patent, will be found in connection with my description of those patents therein referred to later on in this present answer.

The Nordenfelt British patent No. 7195 of 1887 attempts to describe a breech-block operating mechanism, but it utterly fails to describe an operative mechanism. Defendant herein has had constructed a model showing what is described and shown in this Nordenfelt British patent No. 7195, and *have* introduced such model in evidence herein.

I have examined this model at the office of defendant's counsel in the city of Washington, and the model is made with great care and nicety of workmanship, but it clearly demonstrates the fact that as a breech-block operating mechanism it is wholly inoperative.

This fact seems to be fully admitted by defendant's witnesses, and furthermore, said model bears upon it certain directions for working the same, which directions also conclusively show that as a breech-block operating mechanism the thing is utterly worthless and is inoperative.

The inoperativeness of the said model arises from the fact that there is no means provided for returning the breech block to the breech of the gun otherwise than by the old hand process.

As I understand such matters, a patent which shows and describes an inoperative structure can have no bearing whatever upon any other patent, and, therefore, by reason of this understanding, I am of the opinion that this Nordenfelt British patent has no bearing

whatever upon the invention particularly pointed out in claim 1 of the patent in suit.

155 The Canet British patent No. 7435 of 1888 relates to breech-loading cannon, and it shows and describes a breech-block operating mechanism by means of which a breech block of the slotted or mutilated screw pattern or principle is handled to open and close the breech for loading and firing purposes. The breech block of this Canet British patent No. 7435 has its slotted or mutilated portions of the screw-thread arranged longitudinally and parallel with the axial line of the gun.

The breech-block carrier or tray is hinged to the breech by means of a shaft which is mounted to revolve in bearings upon the breech. This shaft is also provided with a series of screw-threads and there is a sleeve, likewise screw-threaded which is moved up and down longitudinally on this shaft by the action of the screw-thread when the shaft is revolved, the sleeve being prevented from turning by suitable stops. This sleeve bears upon it a gear wheel with teeth arranged to enter between the screw-threads upon the breech block, and thus as the gear wheel is revolved, withdraw the breech block in a rearward direction by the contact of the teeth upon the wheel with the screw-threads upon the breech block. This sleeve also bears upon it a rack arranged longitudinally of the shaft which moves the sleeve up and down thereon. The rack upon this sleeve is arranged to operate in connection with a segmental rack attached to the breech block and arranged circumferentially on said block, so that as the sleeve moves up and down on the screw-shaft the breech block is given a partial turn to lock or unlock the block from the breech, as may be desired.

The stop by means of which the sleeve upon the screw-shaft is prevented from turning with the shaft is cut short at one end, so that, as the sleeve has reached one end of the shaft, said sleeve can rotate with the shaft, and at this time the gear wheel attached to the sleeve is in position to engage with the screw-threads upon the breech block and withdraw the block from the breech of the gun by the continued revolution of the screw-shaft and gear wheel.

At one end of this screw-shaft there is attached a worm gear and upon a shaft arranged at right angles to this screw-shaft there is arranged a worm so as to mesh with the worm wheel, and thus, by the revolution of the worm and its meshing with the worm wheel, the screw-shaft is revolved, or rotated, in the desired direction. This shaft bearing the worm also has upon it a crank arm and handle, by means of which it can be revolved.

156 When the breech block is locked in the gun the revolution of this screw-shaft by the turning of the crank first causes the sleeve to move towards the upper portion of the screw-shaft, and by reason of the rack upon the sleeve meshing with the segmental rack upon the breech block, the movement of the sleeve rotates or gives the breech block a partial turn to unlock the same from the breech, and, when this is accomplished, the sleeve has passed beyond the stop which prevented its rotating with the screw-shaft and the gear wheel upon the sleeve is brought in mesh

consequently this Fielding patent can have no bearing whatever on the invention set forth in said claim 1.

The British patent to Whinfield and Horn, No. 15188, of 1888, relates largely to means for handling heavy guns, and it shows and describes various forms of hydraulic mechanism for the manipulation of cannon generally, but in certain figures of the drawings said patent shows a form of breech-operating mechanism. The specification of this Whinfield & Horn patent on pages 7 and 8 thereof states as follows:

"We sometimes employ the devices described in the speci-
154 fications of the following former letters patent, viz: No. 3402, dated 5th March, 1887; No. 9813, dated 12th July, 1887, and No. 7435, dated 28th March, 1888."

I have already described the breech-operating mechanism of the first named of these letters patent, viz., that of the Farcot British patent No. 3402 of 1887, and as the others named are offered in evidence herein I will refer to them in detail when reached and will simply say that there is nothing shown or described in this Whinfield & Horn patent which, in my opinion, has any bearing whatever on the invention particularly pointed out in claim 1 of the patent in suit.

My reason for this opinion, so far as concerns the Farcot British patent No. 3402, will be found in connection with my description of the mechanism of that patent heretofore given, and my reason, so far as concerns the other letters patent named in this Whinfield & Horn British patent, will be found in connection with my description of those patents therein referred to later on in this present answer.

The Nordenfelt British patent No. 7195 of 1887 attempts to describe a breech-block operating mechanism, but it utterly fails to describe an operative mechanism. Defendant herein has had constructed a model showing what is described and shown in this Nordenfelt British patent No. 7195, and *have* introduced such model in evidence herein.

I have examined this model at the office of defendant's counsel in the city of Washington, and the model is made with great care and nicety of workmanship, but it clearly demonstrates the fact that as a breech-block operating mechanism it is wholly inoperative.

This fact seems to be fully admitted by defendant's witnesses, and furthermore, said model bears upon it certain directions for working the same, which directions also conclusively show that as a breech-block operating mechanism the thing is utterly worthless and is inoperative.

The inoperativeness of the said model arises from the fact that there is no means provided for returning the breech block to the breech of the gun otherwise than by the old hand process.

As I understand such matters, a patent which shows and describes an inoperative structure can have no bearing whatever upon any other patent, and, therefore, by reason of this understanding, I am of the opinion that this Nordenfelt British patent has no bearing

whatever upon the invention particularly pointed out in claim 1 of the patent in suit.

155 The Canet British patent No. 7435 of 1888 relates to breech-loading cannon, and it shows and describes a breech-block operating mechanism by means of which a breech block of the slotted or mutilated screw pattern or principle is handled to open and close the breech for loading and firing purposes. The breech block of this Canet British patent No. 7435 has its slotted or mutilated portions of the screw-thread arranged longitudinally and parallel with the axial line of the gun.

The breech-block carrier or tray is hinged to the breech by means of a shaft which is mounted to revolve in bearings upon the breech. This shaft is also provided with a series of screw-threads and there is a sleeve, likewise screw-threaded which is moved up and down longitudinally on this shaft by the action of the screw-thread when the shaft is revolved, the sleeve being prevented from turning by suitable stops. This sleeve bears upon it a gear wheel with teeth arranged to enter between the screw-threads upon the breech block, and thus as the gear wheel is revolved, withdraw the breech block in a rearward direction by the contact of the teeth upon the wheel with the screw-threads upon the breech block. This sleeve also bears upon it a rack arranged longitudinally of the shaft which moves the sleeve up and down thereon. The rack upon this sleeve is arranged to operate in connection with a segmental rack attached to the breech block and arranged circumferentially on said block, so that as the sleeve moves up and down on the screw-shaft the breech block is given a partial turn to lock or unlock the block from the breech, as may be desired.

The stop by means of which the sleeve upon the screw-shaft is prevented from turning with the shaft is cut short at one end, so that, as the sleeve has reached one end of the shaft, said sleeve can rotate with the shaft, and at this time the gear wheel attached to the sleeve is in position to engage with the screw-threads upon the breech block and withdraw the block from the breech of the gun by the continued revolution of the screw-shaft and gear wheel.

At one end of this screw-shaft there is attached a worm gear and upon a shaft arranged at right angles to this screw-shaft there is arranged a worm so as to mesh with the worm wheel, and thus, by the revolution of the worm and its meshing with the worm wheel, the screw-shaft is revolved, or rotated, in the desired direction. This shaft bearing the worm also has upon it a crank arm and handle, by means of which it can be revolved.

156 When the breech block is locked in the gun the revolution of this screw-shaft by the turning of the crank first causes the sleeve to move towards the upper portion of the screw-shaft, and by reason of the rack upon the sleeve meshing with the segmental rack upon the breech block, the movement of the sleeve rotates or gives the breech block a partial turn to unlock the same from the breech, and, when this is accomplished, the sleeve has passed beyond the stop which prevented its rotating with the screw-shaft and the gear wheel upon the sleeve is brought in mesh

with the screw-threads upon the breech block, and the continued turning of the crank and rotation of the screw-shaft causes the sleeve to rotate with the shaft and the gear wheel upon the sleeve to withdraw the breech block from the gun onto the tray or carrier. When the breech block is fully withdrawn onto the breech-block carrier or tray, its further movement relatively to the tray is prevented by a suitable stop, and consequently the carrier tray with the breech block upon it is caused to be swung aside by the continued application of force to the breech block through the gear wheel, sleeve, screw-shaft and connecting devices to the crank where the power is applied. A reversal of the movement of the crank returns the breech block to the breech and locks it therein.

This Canet British patent No. 7435 manifestly does not show or describe a breech-block retractor composed essentially of a lever which is hinged to the breech at one point, and connected to the breech block at another, so as to withdraw the breech block from the breech onto the carrier and push it therefrom into the gun by a direct pulling or pushing action, as before explained. Therefore, this British Canet patent No. 7435 does not contain one of the essential elements or devices of the invention particularly pointed out in claim 1 of the patent in suit, and consequently this Canet patent can have no bearing whatever upon the invention in said claim 1.

This Canet British patent No. 7435 is one of the letters patent referred to in the Whinfield & Horn British patent, and what I have said as to why this Canet patent did not have any bearing upon the invention of said claim 1 applies equally well, so far as this patent is concerned, to what is shown and described in the said Whinfield & Horn patent.

The Sauvee British patent No. 9813 relates to breech-loading cannon provided with a breech block of the slotted or mutilated
157 screw form or pattern, and it also has a carrier for the breech block, which is hinged to the breech in the gun.

The breech-operating mechanism of this Sauvee British patent No. 9813 is in some respects like that of the Canet British patent No. 7435 just heretofore referred to. It is provided with a screw-shaft, sleeve, and gear upon the sleeve, the same as is the case in the said Canet patent; but, instead of the rack upon the sleeve and the segmental rack upon the breech block, there is a pin and squared block attached to the sleeve and an arm attached to the breech block, which arm is provided with slot to receive the pin and squared block attached to the sleeve. The operation of the screw-shaft, sleeve, pin and block and arm upon the breech block is the same in this Sauvee mechanism as it is in the mechanism of the Canet British patent No. 7435. Instead of the pinion upon the sleeve meshing with the screw-threads upon the breech block, the breech block is provided with a rack arranged longitudinally with the block and parallel with the block and gun, for the gear wheel to mesh with, but this does not change the operation of the mechanism.

Instead of the screw-shaft of this Sauvee mechanism being

mounted in bearings upon the breech of the gun, as is the case in said Canet British patent No. 7435, it is mounted upon bearings in the breech-block carrier, and has upon it a gear wheel meshing with another gear wheel, which is also mounted upon the breech-block carrier, which latter wheel meshes with a gear wheel upon the shaft, which in turn is mounted in bearing on the breech of the gun, and which shaft also forms the pintle for the hinging of the breech-block carrier to the breech. This latter shaft or pintle is provided with a worm gear which meshes with the worm secured to a shaft arranged at right angles to said shaft or pintle, and the shaft bearing the worm is provided with a crank arm by means of which it can be revolved. These differences do not alter the general operation of the mechanism.

The said Sauvee patent No. 9813 also shows and describes hydraulic mechanism for operating the screw-shaft.

The Sauvee British patent No. 9813 manifestly does not show and describe a breech-block retractor composed essentially of a lever which is hinged to the breech at one point and connected to the breech block at another, so that the breech block is withdrawn from the breech onto the carrier and pushed therefrom into the
158 breech by a direct pulling or pushing action as before explained. Therefore, this Sauvee British patent No. 9813 lacks one of the essential elements or devices of the invention particularly pointed — in claim 1 of the patent in suit, and consequently it can have no bearing whatever upon the invention set forth in said claim.

This Sauvee British patent No. 9813, of 1888, is also one of the letters patent referred to in the Whinfield & Horn British patent No. 15188, of 1888, and what I have here said applies equally well to the last-named patent, and also as to my reasons for the opinion expressed in connection with said last-named patent.

The Sauvee British patent No. 9453 relates to breech-loading cannon which are provided with breech blocks of the slotted or mutilated screw form or pattern, and there is also a breech-block carrier hinged to the breech of the gun. The breech-block operating mechanism of this Sauvee British patent No. 9453 requires that the breech block shall have an extension extending rearwardly therefrom, which extension is provided with a sleeve in which there are bearings for a shaft. Upon this shaft there is a squared block which is arranged to move in a slot constructed in the breech-block carrier, which slot is arranged in a line parallel with the axis of the breech block and gun. The shaft bearing this squared block extends beneath the breech-block carrier, and has arranged upon it, or secured thereto, a lever which under certain circumstances, hereafter to be explained, acts as a crank arm. The bearings upon the sleeve, and upon which said shaft is mounted, are arranged so that the lowermost one in connection with the squared block rests upon the breech-block carrier, and the breech block is more or less supported thereon by this bearing and the squared block before referred to. By these means the breech block is continually connected with the breech-block carrier, and is never disconnected therefrom; no matter

what the relative positions of the breech block relative to the carrier may be. When the breech block is withdrawn from the breech so as to rest wholly upon the carrier, or, is to be pushed therefrom into the breech, there is a sliding frictional contact between the parts which connect the breech block to the carrier, and the carrier itself, and the extent of the frictional contact is necessarily considerable, and, therefore, a slight amount of dust or foreign matter entering in between these contacting surfaces would render the mechanism very hard to work, if not entirely to disable it.

159 The lever attached to this shaft, as before described, serves the function of a lever only during the time that the breech block is being withdrawn from, and pushed into, the gun, and when it does serve the function of a lever its fulcrum point is constantly changing. The fulcrum point of this lever is upon the breech-block carrier, but, as before stated, it is constantly changing and not stationary relatively to the breech block or the breech-block carrier. The shaft upon which this lever is attached also bears a segment of a beveled gear wheel which segment meshes with another segment of a beveled gear wheel or rack attached to the rear end of the breech block, so that by the turning of the shaft and the meshing of the beveled gear segments one with the other, the breech block is given a partial turn or rotation to lock and unlock it from the breech of the gun. During the rotation or partial turning of the breech block to lock and unlock it from and to the breech the lever acts simply as a crank arm for the rotating of the shaft, and the other portion of the lever is wholly disconnected from the breech-block carrier.

Two forms of breech block are shown in the drawings of this Sauvee British patent No. 9453, and most of the entire patent is taken up with the description and showing of the conical form, the other or cylindrical form of breech block being simply shown in one figure of the drawing and referred to as a modification of the principal or conical form of breech block. The conical form of breech block does not require to be fully withdrawn from the breech of the gun in order that it may be swung aside to expose the breech for loading purposes. While in the case of cylindrical form of breech block the block has to be fully withdrawn from the breech of the gun before the swinging aside of the breech block can begin. It will be observed that in Fig. 6 where the modification calling for the cylindrical form of breech block is shown the parts of the figure are made upon a very much smaller scale than is the case with the other figures of the drawings.

In order to show the cylindrical form of breech block and the breech-block operating mechanism upon the same scale as the conical form of breech block and breech-operating form of mechanism are shown, I have had prepared a drawing of said Fig. 6 upon the same scale as that shown in Fig. 2 of the same drawing, using the bore of the gun as the basis or standard or measurement, and supplying the free end of the lever before referred to, of the

160 same length as it is shown in said Fig. 2. A comparison of this drawing with said Fig. 2 will show the difference in the

extent of movement required for the breech block to be withdrawn from the gun in order that it may be swung aside, and also the difference in the extent of movement required in the fulcrum point of the lever relatively to the breech-block carrier. In making this drawing I had the draftsman omit the cartridge or gas-check extractors, as well as some other parts, for the purpose of clearness of illustration, as such omitted parts have nothing to do with the invention referred to in claim 1 of the patent in suit.

I have also had the draftsman indicate the different positions of the several parts at different times in the operation of the mechanism, as for instance, the position of the parts when the breech block has been rotated or partially turned so as to unlock it from the breech, then as the parts are in the position they occupy when the breech block is fully withdrawn from the breech and resting wholly upon the tray, and again the positions of the same parts as they appear when the breech block and carrier are swung aside to expose the breech for loading purposes. The parts are shown in full lines as they appear when the breech block is locked to the breech, and the first dotted lines of the lever to the left shows the position of the lever when the breech block has been unlocked from the breech; the next position of the lever to the left in dotted line shows the position of the lever relatively to the carrier, and also of the breech block to the carrier, when the breech block is withdrawn from the breech onto the carrier; and, again, the next position to the left in dotted line shows these several parts as they appear when the breech block is fully swung aside.

An examination of these several positions of the parts discloses the fact to be that the handle of the lever has moved to the left more than three times the length of the lever between the handle and the point where it is secured to the shaft, as before explained. Such an examination also discloses the fact that the sweep of such handle rearwardly as well as to the right is largely increased by reason of the peculiar arrangement of the parts, as before explained. As before explained, this lever is connected to the shaft, which in turn is mounted in bearings upon the sleeve connected with the breech block below the breech-block carrier, and, therefore, the power applied to the handle to move the breech block into or out of the gun is necessarily applied at a point considerably below the line
161 of resistance, and in order to counteract the tendency of such an application of power to move the block out of a straight line it is necessary that the breech block be positively guided in all directions when it is to be withdrawn from, or pushed into, the breech of the gun, and in this case this guiding is done by the contact of the various surfaces with the upper and lower, as well as with the side edges of the guiding slot in the breech-block carrier.

The natural tendency of the application of force or power at a point considerably removed from the line of resistance, as in this Sauvee British patent No. 9453, is to tip or cant from its proper position the thing to be moved, and such an application of force with such a tendency requires frictional contact to a considerable extent to compel the thing to be moved to move in a direct line.

This is not the case when the power is applied directly behind the block and in substantially the line of resistance.

This Sauvee British patent No. 9453 of 1887 does not show and describe a breech-block retractor, composed essentially of a lever which is hinged at one point to the breech of the gun, and at another point connected to the breech block, so that the breech block is withdrawn from the breech onto the carrier and pushed therefrom into the breech by a direct pulling or pushing action on such retractor. If the lever connected to the shaft, as before explained, should be termed generally a breech-block retractor, then such retractor would not be hinged to the breech of the gun at one point and connected to the breech block at another point, and the most that could be said, even assuming that it was hinged to anything, would be that it was hinged to the breech block itself, so as to partake of the movements of the breech block when such block is moved from or into the breech of the gun.

Such a breech-block retractor is not the breech-block retractor which is an essential element or device of the invention particularly recited in claim 1 of the patent in suit, and, furthermore, it does not have the principle or mode of operation, nor does it possess the advantages of the breech-block retractor shown and described in the patent in suit, and particularly referred to in claim 1 thereof.

Because of the above facts this Sauvee British patent *of* No. 9453 of 1887 lacks one of the essential elements or devices of the invention of said claim 1, and therefore, it has no bearing whatever on the invention of said claim 1.

It will be remembered that the Canet British patent No.
162 7434 of 1888 contains a reference to this British patent No. 9453 of 1887, and the specification of said Canet patent states that the invention of said Canet patent relates to an improvement upon this breech-block operating mechanism shown and described in the said Sauvee British patent 9453 of 1887.

Complainants' counsel offers in evidence the drawing of figure 6 of the Sauvee British patent No. 9453 produced by the witness and the same is marked "Complainants' Exhibit and Enlarged Drawing Fig. 6, Sauvee Patent, W. E. Z., spec. ex., Dec. 28, 1893."

The Shenkl U. S. patent No. 9943, shows a cannon which is cut into about midway of its length, and the two parts are joined together by means of mutilated or slotted screw-threads somewhat as the breech blocks heretofore referred to are secured to the breech of the gun. The said Shenkl patent, after stating that the breech portion of the gun is to be separated or withdrawn from the other portion, and then turned on its trunnions, so that the open part of the gun points upwardly or in a vertical direction, and that, after the loading is accomplished, this breech portion was to be turned downward and connected with the other portion, and the two portions secured together, and of the motions necessary to accomplish this result, says:

"Which motions are performed through the intervention of ap-

propriate cams, catches and springs, by the motion of a single lever worked by the hand of the gunner."

An examination of this Shenkl patent discloses the fact to be that the single lever referred to is necessarily given a backward and forward motion to separate the two portions and turn the breech portion upwardly, and, also, that the same lever is given another backward and forward motion to again connect the two portions of the gun together.

This Shenkl patent No. 9943 does not show a single element or device referred to in claim 1 of the patent in suit, and therefore manifestly it has no bearing whatever upon the invention particularly pointed out in claim 1 of the patent in suit.

The Cochrane U. S. patent No. 26256 shows and describes a breech-loading cannon in which the breech block or plug is given a partial turn to lock or unlock it from or to the breech. This breech block or plug is permanently mounted in a ring which is hinged to a slide or bar which is arranged to slide in suitable bearings upon
163 the gun in a direction parallel with the axial line of the gun.

The breech block is provided with a handle permanently attached to it, and by means of which the breech block or plug is manipulated. To unlock the breech block or plug from the gun the gunner takes hold of the handle permanently attached to the breech block and applies force in the direction to rotate the block and unfasten it from the gun, and then by a direct pull rearwardly moves the plug, the carrier in which it is mounted, and slide bodily in a rearward direction until, by pulling on the handle in a different direction, the plug and carrier can be swung aside on its hinge, connecting it with the slide so as to enable the gun to be loaded.

This Cochrane patent contemplates that, instead of giving a direct pull in a rearward direction to withdraw the plug from the breech, that the slide before referred to may be operated by a rack and pinion or any other suitable contrivance to permit the carrier ring to be moved back far enough to withdraw the breech block or plug from the gun before it is moved aside. I understand that the suggestion is made owing to the obvious amount of friction there would be between the slide and its bearings upon the gun.

This Cochrane patent No. 26256 does not show and describe a breech-block retractor as before explained, and therefore it manifestly lacks one of the essential elements or devices of the invention of claim 1 of the patent in suit, and it has no bearing whatever upon the invention of said claim.

The Goodwin patent No. 43110 shows and describes a breech-loading cannon in which there is employed a breech block or plug of conical form which is hinged to the breech of the gun so that it may be swung aside without withdrawing the breech block or plug directly in a rearward direction. The hinge for this breech plug or block is provided with two pintles, so that the hinging is more flexible than it would be with a single pintle. This conical breech plug or block is held in place by means of a heavy stirrup-like device which is pivoted to the gun and swung around behind the breech plug or block so as to hold the latter in place, and this stir-

rup-like device receives the shock of the explosion and secures the breech plug or block in place. In order to remove the breech block or plug from the breech this stirrup-like piece is swung aside by means of a rack and pinion connected to the breech and stirrup.

This Goodwin No. 43110 does not show and describe a breech-block retractor as before explained and therefore, it has no
164 bearing whatever upon the invention particularly recited in claim 1 of the patent in suit.

The Driggs & Schroeder patent No. 360,798 relates to a breech-loading cannon, in which the breech block is of substantially a square form, the breech of the gun being provided with a suitable slot to receive such square breech block. This breech block is provided with a slot through which passes a shaft mounted in bearings upon the breech of the gun, and by means of which the block can be made to move upwardly or downwardly upon the shaft, and also when in a downward position upon said shaft to turn sufficiently to expose the breech of the gun. This breech block is locked into the breech of the gun by projections upon the breech block entering suitable recesses provided in the breech of the gun, and the holding action of said shaft in said slot. The breech block is caused to move in various directions to secure it in place, or to expose the breech for loading purposes, by means of suitable cams and other devices provided for this purpose.

This Driggs & Schroeder patent does not show and describe any of the devices or elements particularly referred to in claim 1 of the patent in suit; therefore, it manifestly cannot have the slightest bearing upon the invention particularly referred to in claim 1 of said patent in suit.

Adjourned to December 29th, 1893, 10.30 a. m., at the same place.

NEW YORK, *December 29th*, 1893—10.30 a. m.

Met pursuant to adjournment.

Present: Counsel as before.

HENRY F. NEWBURY, in further answer to Q. 11 says:

The Nordenfelt U. S. patent No. 384,537 relates to breech-loading cannon, and it shows and describes two forms of breech-block operating mechanism designed for use in connection with breech blocks of the slotted or mutilated screw form or principle. These two forms of breech-block operating mechanism differ principally as to the location of certain grooves or slots, by means of which the breech blocks are withdrawn from and pushed into the gun, and for the purposes of this description I think it necessary to describe only one form in detail and pointing out the main differences between the two forms.

The first form of breech-block operating mechanism shown and described has a ring pivoted to the breech of the gun by a
165 stud, whose axial line is parallel with the axial line of the gun, so that this ring, whenever it is moved, moves in a plane at right angles to the axial line of the gun. This ring is termed

in this Nordenfelt U. S. patent "a carrier ring," and it is provided with a tubular opening, adapted to receive the breech block, and the breech block is permanently connected with this carrier ring so that it is always within the ring, no matter what the position of the breech block. relative to the breech may be. This "carrier ring" is provided with a sleeve, which is arranged upon the exterior of the carrier ring and concentric with the opening in the carrier ring, which receives the slotted-screw breech block. This sleeve is arranged to revolve around the carrier ring to the extent of a partial revolution, and it is provided with an arm and handle by means of which it can be made to revolve around the carrier ring a partial revolution.

The breech block is provided with a helicoidal slot or recess somewhat in the manner of the helicoidal slots or recesses in the breech block shown in the Canet British patent No. 7434, of 1888. In this latter case there were two of these helicoidal slots or recesses, but in this Nordenfelt U. S. patent there is only one. I will here state that the slots caused by the mutilation or removal of a portion of the screw-threads in this Nordenfelt mechanism are arranged parallel to the axial line of the gun instead of spirally therewith, as is the case in the said Canet British patent No. 7434, of 1888. The helicoidal slot in the breech block of this Nordenfelt mechanism is clearly shown in Fig. 2 thereof, and it is of substantially the same pitch throughout its length, and it extends, as there shown, into that portion of the breech block which is within the carrier ring when the breech block is secured in the breech of the gun.

The sleeve mounted upon the carrier ring is provided with a stud or roller which passes through a slot arranged in the carrier ring and enters the helicoidal slot or recess in the breech block and works within said slot or recess during the time that the breech block is being rotated or partially turned to lock and unlock the breech to and from the gun as well as during the time the breech block is being withdrawn from and pushed into the breech. By the application of force to the handle and to the arm attached to the sleeve, which is mounted upon this carrier ring, the stud or roller in the helicoidal slot tends to move the breech block in a direction to rotate it upon its axis, and as the breech block cannot move outwardly
166 owing to the fact that the screw-threads upon it and the breech are interlocked, one into the other, the breech block is caused to rotate sufficiently to unlock it from the breech, at which time it is prevented from further rotation by a suitable stop, when by the further application of force in the same direction the breech block is withdrawn by the stud or roller, being forced along the helicoidal slot or recess until the breech block is fully withdrawn from the breech, and is supported wholly by the carrier ring, at which time the further movement of the breech block in a rearward direction is prevented by a suitable stop.

The further application of force to the handle in the same direction as before lifts the breech block and carrier ring bodily in an upward direction, causing the ring to turn upon the stud which is mounted on the gun, and such lifting and turning action is contin-

ued until the breech block is swung far enough to one side to expose the breech of the gun for loading purposes. This lifting action of the carrier ring and breech block within it, causes the ring and breech block to move in a plane at right angles to the axis of the gun. Suitable stops are placed at each side so that the movement of the carrier ring is stopped at the desired points. To return the breech block to the gun, the carrier and block have to again be bodily lifted, the ring turning upon its stud until it is brought into a position opposite the breech of the gun, when the continued application of force, first causes the stud or roller mounted in the sleeve to traverse the helicoidal slot or recess and push the block into the gun, and then the movement of the block is stopped, which causes the breech block to be rotated to lock it within the breech.

From this operation of the helicoidal slot or recess and the stud or roller in the sleeve it will be seen that the application of force to the handle to unlock and withdraw the breech block from the gun is one which, always from the beginning of the operation to the end of it, tends to force the breech block in a rearward direction, so that there is not what Mr. Dashiell has termed a "step-by-step" action or "lost motion." This is also true when the breech block is to be returned or pushed into the breech and locked therein; that is, the power which does this work is always acting to cause the breech block to be moved in a direction leading into the gun, and opposite to the direction when the breech block is withdrawn therefrom.

In the second form of breech-block operating mechanism shown and described in this Nordenfelt U. S. patent No. 384,537,
167 the sleeve mounted upon the carrier ring is provided with two arms, which, in turn are provided with extensions at right angles thereto and longitudinally of the gun, which extensions are in turn provided with studs or rollers, which are to work within slots on the exterior of the gun, which slots or recesses are, for a part of their distance, of the same pitch as that of the screw-threads upon the breech block, and, at other points, of a pitch which will force the breech block into the carrier, the carrier itself moving rearwardly upon its stud with the breech block. The carrier is somewhat differently pivoted to the breech of the gun from what is the case in the first form shown, but such difference does not affect the general operation of the mechanism, the carrier ring, and breech block in each case having to be bodily lifted when the breech of the gun is exposed or the breech block is to be returned to the breech.

From the above it will be manifest, I think, that this Nordenfelt U. S. patent No. 384,537 does not show and describe a breech-block retractor composed essentially of a lever which is at one point hinged to the breech of the gun, and at another point connected with the breech block, so that the breech block is withdrawn from the breech onto the breech-block carrier, and pushed therefrom into the breech by direct pulling or pushing action, as the case may be. Therefore, this Nordenfelt U. S. patent lacks one of the essential elements or devices of the invention particularly set forth in claim 1 of the pat-

ent in suit, and consequently it can have no bearing upon said invention.

It is manifest that each and every one of these alleged anticipating patents fails to show and describe one of the essential elements or devices of the invention particularly pointed out in claim 1 of the patent in suit, and, therefore, because of this fact alone, no one of such alleged anticipating patents, or all of them taken together, have any bearing whatever upon the invention particularly referred to in claim 1 of the patent in suit.

Because of this fact, as well as the other heretofore mentioned in this answer, I am compelled to the opinion heretofore expressed regarding this matter.

12 Q. I understand you to express the opinion that none of the alleged anticipating patents contain the Seabury invention referred to in the first claim of the patent in suit. Will you now state whether, in view of the mechanisms shown in those alleged anticipating patents, the actual invention of Seabury referred to in
168 the first claim of the patent in suit is so limited in its scope as that the same is not found in the Dashiell construction as embodied in the Dashiell gun and exemplified in the defendant's model, Exhibit Y?

A. In my opinion the actual invention pointed out in claim 1 of the patent in suit is not in any way limited or abridged in its scope by anything found in any one or all of the alleged anticipating patents, and therefore such invention is not so limited or abridged in its scope that the same is not found in the Dashiell construction as embodied in the Dashiell gun and exemplified in Defendant's Exhibit Y, but, on the contrary, the said Seabury invention as particularly pointed out in claim 1 of the patent in suit, and heretofore explained by me, is found in said Dashiell construction as it is embodied in the Dashiell gun and as it is exemplified in defendant's model Y.

My reasons for this opinion, I think, will be sufficiently manifest from what I have heretofore said regarding the said Seabury invention of claim 1 of the patent in suit and the said alleged anticipating patents. But I will here add that as I understand the said Seabury invention of said claim 1, the same general means employed to rotate or partially turn the breech block to lock and unlock the same, to and from the breech and to swing the breech block and the breech-block carrier aside are to be employed as means for transmitting the power to the breech-block retractor to cause it to operate and serve the function set forth in the patent in suit. Or in other words, the power which is to — applied to operate the breech-block retractor is to be applied in the first instance at the same point that it is applied to cause the breech block to be locked and unlocked to and from the breech, and the breech block and the breech-block carrier is to be swung aside, either to expose the gun or return the breech block to the gun. That is the power which is to be applied to perform these three several acts or motions is to be applied in the first instance at one and the same point of the breech-block operating mechanism.

As I understand the matter, the form, shape and arrangement of the means to which power is applied for performing these three several acts or motions is of no special consequence, and it is only required that there shall be some means employed, and that the power which is to finally act upon the breech-block retractor of said claim 1 shall be transmitted from the point where it is first applied to such means to the breech-block retractor.

169 It will be observed that in the patent in suit there are shown and described three different forms or shapes and arrangements of means by which the power is transmitted to perform these three several acts or motions. In Figs. 1 to 6 inclusive there are two different forms and arrangements of parts shown, one of which is a rack rigidly attached to a lever and a pinion meshing therewith, and a groove pulley, designated therein as P, to which a wire rope is to be attached so that the mechanism will be operated by the recoil or counter-recoil of the gun. In Figs. 7 and 8 another shape and arrangement of parts are shown consisting of a rack pivoted to a lever, a pinion meshing with the rack and certain guiding surfaces, by means of which the rack is held in mesh with the pinion. In Figs. 7 and 8 there are different means shown for connecting the shaft bearing the above-named pinion to the breech-block retractor than what is the case in Figs. 1 to 6 inclusive.

These facts make it apparent, when taken in connection with the fact that said claim 1 does not call specifically for any particular form and arrangement of means, that any special form and arrangement of means is not required, and all that is necessary is, as above set forth, that the power, in the first instance, shall be applied at one point, for the performance of these three several acts or motions, and that any differences that may appear between the several forms and arrangements of means shown in the patent in suit and in any or all of the alleged anticipating patents are immaterial differences, and have not been seriously considered by me when referring to the said alleged anticipating patents in connection with the invention of claim 1 of the patent in suit.

13 Q. I have heretofore asked you whether or not the Dashiell gun, as exemplified in Defendant's Exhibit Y, contains the Seabury invention referred to in the first claim of the patent in suit. Will you now state whether or not the invention of the first claim of the Seabury patent is found in the patent to Dashiell No. 468,331, dated February 9, 1892?

A. I have repeatedly read and carefully studied a printed Patent Office copy of the specification and drawings of the Dashiell patent in question, and, in my opinion, the said Dashiell patent shows and describes a mechanism which embodies, in substance, the invention shown and described in the patent in suit, and particularly referred to in claim 1 thereof.

170 At this point I call attention to the following statement found in defendant's record herein, which reads as follows: "(NOTE.—It is understood that the Seabury device or patent relates to the patent mentioned in the bill of complaint; and that the

Dashiell device, or any reference to the Dashiell patent, refers to the Dashiell gun as made.)"

This I understand to be an admission that the mechanism shown in the Dashiell patent, referred to in the question, and the Dashiell gun, as made and exemplified in Defendant's Exhibit Model Y, is one and the same so far as this cause is concerned.

This being the fact, my reasons for the opinion heretofore expressed in this answer would be the same as those expressed when considering the substantial identity between the Dashiell gun, as made and exemplified in defendant's model, Exhibit Y, and the invention particularly pointed out in claim 1 of the patent in suit, and, therefore, such reason would apply equally well when comparing the mechanism shown in the said Dashiell patent with the invention particularly pointed out in said claim 1, and I will not repeat such reasons here.

14 Q. What principle or principles of operation is in the Seabury construction referred to in the first claim of the Seabury patent, which are also found in the Dashiell construction?

A. The principle or principles of operation which is in the Seabury construction particularly referred to in the first claim of the patent in suit, and which is also found in the Dashiell construction, is that in both there is a breech-block carrier hinged to the breech of the gun onto which the breech block can be withdrawn, and from which said block can be pushed by a breech-block retractor, which is hinged to the breech, so as to be capable of moving independently of said carrier when the breech block is withdrawn thereupon and pushed therefrom, but capable of moving with said carrier while the breech block is upon the carrier.

This principle or principles of operation permit of the least number of points and extent of fractional contact between the breech of the gun, the breech block and the breech-block carrier, so that there is attained certainty of action or operation with comparative ease and with the least expenditure of force.

As heretofore explained there is some little difference between the hinging of the breech-block retractor to the breech of the
171 gun and the connection of such retractor to the breech block, but I have heretofore given my reasons at length why such differences are immaterial and not of the slightest consequence when considering the substantial identity of the two constructions, and will only add that so far as the hinging of the two breech-block retractors to the breech of the gun is concerned, that in the Dashiell construction the breech-block retractor and the breech-block carrier could be hinged upon one and the same shaft or pintle without in any way affecting or modifying the mode or principle of operation of such breech-block retractor, and, likewise the breech-block retractor of the said Seabury construction, referred to in the first claim of the patent in suit, could be hinged upon a separate shaft or pintle from that upon which the breech-block carrier is hinged to the breech, and yet have the different parts of the mechanism operate the same as they do in the mechanism used to illustrate the invention of the said first claim.

Complainants' Exhibit Model O shows a breech-block retractor hinged to the breech, but hinged upon a separate pintle or shaft from that upon which the breech-block carrier is hinged. I think it will be manifest to any one that, so far as the mode or principle of operation is concerned, there is not the slightest difference between what it is now and what it would be if such breech-block retractor was hinged upon the same shaft or pintle upon which the breech-block carrier is hinged.

The mechanism shown in Figs. 7 and 8 of the patent in suit might be changed so that the breech-block retractor might be hinged upon a separate shaft or pintle from that on which the breech-block carrier is hinged and yet the mode or principle of operation would not be in any way affected or modified from what is the case in the mechanism as therein shown.

15 Q. Is the principle of construction and the mode of operation just referred to by you found in any of the alleged anticipating patents, particularly in the Sauvee British patent No. 9453?

A. The principle of construction and mode of operation just referred to by me in my last preceding answer is not found in any of the said alleged anticipating patents, and in so stating I have particularly had in mind the said Sauvee British patent No. 9453.

I have heretofore at length given my reasons why in my opinion no one of the said alleged anticipating patents nor all of
172 them taken together show or describe a breech-block retractor composed essentially of a lever which at one point is hinged to the breech of the gun and at another connected to the breech block so as to withdraw the breech block from the breech onto the carrier, or push it therefrom into the breech by a direct pulling or pushing action as the case may be, and so long as this is the fact no one of the said alleged anticipating patents, of course including the said Sauvee British patent No. 9453 of 1887, does show and describe a mechanism in which there is the principles of construction and the mode of operation referred to by me in my last preceding answer. Because it is necessary in order to have such principle of construction and mode of operation that there shall be a breech-block retractor hinged to the breech and connected to the breech block in the manner named.

I have heretofore referred to this Sauvee British patent No. 9453 of 1887 at considerable length, and pointed out why the said patent did not show and describe a breech-block retractor hinged to the breech as called for in said claim 1 of the patent in suit, even when we assume that the mechanism shown and described in the said Sauvee patent contains what might be termed a "breech-block retractor." It will be remembered that the only part of such Sauvee mechanism which can be so termed is not hinged to the breech of the gun, and, at most, can only be said to be hinged to the breech block itself, so as to partake of all of the movements of the breech block when such block is withdrawn from or pushed into the breech of the gun. This is manifestly not hinging the breech-block retractor to the gun.

16 Q. What advantages are there in the Seabury and Dashiell

construction and mode of operation in which the principle just referred to by you is involved as compared with the Sauvee construction set forth in British patent No. 9453 of 1887?

A. The advantages arising from the invention particularly pointed out in said claim 1 of the patent in suit and likewise found in both the Seabury and Dashiell construction, and the said principle of construction and mode of operation just referred to, as compared with the Sauvee construction set forth in the said British patent No. 9453 of 1887, are principally as follows:

Capacity for great rapidity of operation with a small extent of frictional contact between the parts which move the breech block into or out of the breech of the gun.

173 The small number of parts and points of connection actually required between the breech of the gun, the breech block, and the breech-block carrier.

The small number and extent of the points of connection between the breech-block retractor, breech block, and breech of the gun.

The application of power or force to the breech block directly behind the same, and in the direction of the line of resistance, as well as the application of such power of force in any desired relation to the line of movement of the breech block relatively to the breech of the gun.

The small chance or liability of dirt and foreign matter, such as is very likely to enter the mechanism, getting into or between the parts of the breech-block operating mechanism.

The ease with which dirt or foreign matter when thrown upon or into the parts of the breech-block operating mechanism is removed by the operation of the mechanism.

The greater amount of dirt or foreign matter required to interfere with the working of the breech-block operating mechanism over what is the case in the said Sauvee mechanism.

The small extent of lost motion and sliding contact between the breech-block retractor, breech block and the breech of the gun.

The compactness of construction arising from the nearness of the points of connection between the breech of the gun and the breech block, and, consequently, among other things, the comparatively small sweep of the hand of the operator when operating the mechanism.

A stationary point of hinging of the retractor while the breech block is being withdrawn from or pushed into the breech of the gun.

The greater amount of strength obtained with the same size and height of the parts of the mechanism.

The comparative ease, certainty and rapidity of operation of the breech-block operating mechanism, under the exceptional or onerous conditions of battle whether on sea or land.

17 Q. Do the depositions taken on behalf of the defendants anywhere indicate that the defendant's witnesses Messrs. Bartlett and Dodge, consider that any of the alleged anticipating patents show

the principle of operation of the Seabury invention referred to in the first claim of the patent in suit?

174 A. The said depositions do indicate that defendant's experts Messrs. Bartlett and Dodge consider that several of the alleged anticipating patents show the principle of operation of the Seabury invention, particularly referred to in claim one of the patent in suit.

18 Q. Which of them?

A. Both Messrs. Bartlett and Dodge, defendant's experts, seem to be of the opinion that the Nordenfelt British patent No. 7195 of 1887 shows and describes identically the same construction and mode of operation that is found in the Seabury patent in suit and particularly pointed out in claim 1 thereof.

Mr. Bartlett, when referring to this Nordenfelt British patent No. 7195 of 1887, says:

"I have carefully examined this patent element by element, and all the elements named in Seabury's claim- 1 and 4 are found in this patent and in their same relation to the other operative parts of the gun, and the operation of the device is identical with the operation of the elements of claims 1 and 4 of Seabury's patent."

Mr. Dodge, when referring to this same Nordenfelt British patent No. 7195 of 1887, says:

"So far as the parts recited in Seabury's first claim and the action of those parts is concerned they are practically identical with those disclosed in the Nordenfelt patent No. 7195."

From this it appears that both Messrs. Bartlett and Dodge are of the opinion that this Nordenfelt British patent No. 7195 contains the principle of construction and mode of operation which is set forth in claim 1 of the patent in suit.

It will be remembered that defendant has had constructed a model of what is shown and described in this Nordenfelt British patent No. 7195 and also that this model discloses the fact to be that this Nordenfelt British patent does not show and describe an operative mechanism.

This fact seems to have been overlooked by both of defendant's experts, Messrs. Bartlett and Dodge. In fact, when Mr. Bartlett, on cross-examination, was asked regarding whether or not this British patent showed and described an operative mechanism, he seemed to be of the opinion that it did describe and show an operative mechanism. In this he seems to have been clearly in error, as is shown by said defendant's model. Mr. Dodge, I believe, was not questioned upon this point.

175 Mr. Bartlett, defendant's expert, when referring to the Sauvee British patent No. 9813, of 1887, says:

"This patent describes a mutilated screw breech mechanism, a breech-block carrier hinged to the breech, and a breech-block retractor hinged to the breech, moved independently of said carrier to draw the breech block therein, and to push it therefrom, and capable of moving with said carrier while the breech block is therein. In other words, the first claim of the Seabury patent applies as well to the construction described in the Canet (meaning, as

I understand Sauvee) save as claim 1 is limited by the words, substantially as herein set forth."

Mr. Bartlett, when referring to the Sauvee British patent No. 9453, of 1887, says:

"This patent describes a gun with a mutilated-screw breech, which is withdrawn in a rearward direction and has a breech-block carrier hinged to the breech, and a breech-block retractor hinged to the breech to draw such block into such carrier and to swing the carrier. This construction in my opinion has element for element precisely the construction covered by claim 1 of the patent in Seabury."

Again when Mr. Bartlett is referring to the Nordenfelt U. S. patent No. 384,567, dated June 12, 1888, says:

"This patent I consider has all the elements of Seabury's claim 1 in substantially the same relation, if it be considered that the swivel breech-block retractor of Nordenfelt is the mechanical equivalent of the hinged retractor of Seabury. As the retractor of Nordenfelt has the same function and operation in very nearly the same way, I consider it the mechanical equivalent in this case."

Mr. Bartlett, when referring to the Farcot British patent No. 3402 of 1887, says:

"In this English patent, I find, 'a combination with a breech-loading cannon and the breech block for the same, which is withdrawn in the rearward direction, with a breech-block carrier hinged to the breech and a breech-block retractor (being the part marked "1" in the drawings) hinged to the breech separate from said carrier and moved independently from said carrier to throw the breech block into and push it therefrom, but capable of moving with said carrier when the block is therein,' in the terms of Seabury's first claim, omitting the final words of said claim."

19 Q. What do you consider to be the error of defendant's witnesses in attributing to the alleged anticipating patents that
176 you have named the principle of construction and mode of operation of the Seabury invention referred to in claim 1 of the patent in suit?

A. So far as concerns the Nordenfelt British patent No. 7195 I will only say that defendant's expert witnesses, Messrs. Bartlett and Dodge, fell into the error of assuming that that patent showed and described an operative mechanism, when, as a matter of fact, this was not the case.

So far as concerns the other alleged anticipating patents referred to they seem to have fallen into the error of assuming that any and every breech-block operating mechanism designed for manipulating or handling a slotted or mutilated screw breech block wherein the power, in the first instance, is applied to a single part or at a single point in the mechanism to lock and unlock the breech block to or from the gun, and which withdrew the block and swung it aside, and then returned and locked the breech block in the gun, was a mechanism in which there was a breech-block retractor hinged to the breech of the gun and connected to the breech block, as called for in said claim 1 of the patent in suit. Or, in other words, they

assumed that any and every device by which a breech block of the mutilated or slotted screw form could be removed from and returned to the breech of the gun, contained a breech-block retractor hinged to the breech of the gun as set forth in the patent in suit and particularly pointed out in claim 1 thereof.

To illustrate; they have assumed that the Farcot British patent, No. 3402, of 1887, shows and describes a breech-block retractor hinged to the breech as set forth and particularly pointed out in claim 1, as fully appears by what Mr. Bartlett has said regarding what he finds in said Farcot patent, and his language upon this point has been quoted by me in my last preceding answer. Mr. Bartlett, in stating what he finds in the mechanism shown and described in this Farcot British patent, seems to have adopted largely the language of claim 1 of the patent in suit, but it will be observed that although this language appears to be a quotation from said claim 1, yet it differs in some of the words from the language found in said claim 1. It will also be observed that Mr. Bartlett omits the final words of said claim 1, which are as follows: "Substantially as herein set forth."

I understand that Mr. Bartlett is of the opinion that these words, in view of the prior state of the art as shown by the alleged anticipating patents, require the said claim to be understood, by reason of such words and such prior art, as calling for a mechanism
177 in all particulars like that shown and described in the patent in suit. I mention this simply to explain my understanding of his statement as to what he finds in the mechanism shown and described in the said Farcot patent. That is, as I understand him, the said Farcot patent shows and describes a mechanism in which there is a breech-block retractor which is hinged at one point to the breech of the gun and connected at another point to the breech block, so that the breech block is withdrawn from the breech onto the breech-block carrier and pushed therefrom into the breech of the gun in substantially the same way and by substantially the same means as in the case in the invention particularly pointed out in claim 1 of the patent in suit. It will be remembered that this Farcot British patent 3402 of 1887 is provided with a shaft mounted to rotate in bearings upon the breech, and having secured to such shaft a gear wheel. As before explained, a gear wheel mounted to revolve in bearings upon the breech of the gun is manifestly not the breech-block retractor shown and described in the patent in suit and particularly pointed out in claim 1 thereof.

It is because of the above fact and those heretofore given in connection with the said alleged anticipating patents that I am compelled to the opinion heretofore expressed as to the error of said Messrs. Bartlett and Dodge, defendant's experts.

20 Q. Will you refer to Defendant's Model Exhibit "Z" and state whether or not it is a properly constructed model; and if, in your opinion, it is not, state why not?

A. Defendant's Exhibit Model Z is, in my opinion, poorly constructed; that is, the workmanship is of poor quality and the fitting

of the moving parts is loose and to a greater extent than would be the case if the workmanship was of good quality, and equal to that found in defendant's model of what is shown and described in the Nordenfelt British patent No. 7195. This looseness in the fitting of the working parts, or poor workmanship, renders the operation of said model Z exceedingly uncertain and unsatisfactory.

21 Q. I understand that Mr. Dashiell considers the Seabury invention to be inoperative by reason of the alleged liability of the gas check to jamb after an explosion, and prevent the withdrawal of the plug or breech block, I am referring now to his criticisms made in his 46th answer. Will you state whether or not you agree with him, giving your reasons; and, in order that you may speak as accurately as possible of the position taken by him, I will
178 read to you his answer to question 46; and in the other respects in which he, in the same answer, expresses the opinion that the Seabury construction is inoperative or objectionable, state whether or not you agree with him and give your reasons?

Mr. Dashiell's answer to Q. 46: "First, the Seabury mechanism depends for the action of nearly all its parts on the revolution of a vertical driving shaft. In unlocking the plug and withdrawing it, he is compelled by this arrangement of the driving shaft to use a crank arm for the unlocking part, which comes to what is called a dead centre when the plug is completely unlocked. The distance traveled by the crank pin during this motion is, approximately, equal to the radius of the crank. Could this unlocking rack have been driven by a pinion, the distance traveled by that rack or any tooth on that pinion would be equal to one-quarter, approximately, of the distance of the circle. He has, therefore, lost a certain distance in travel; in other words, his actuating crank or lever must move just that much further to accomplish this result. When the plug is to be withdrawn, after being unlocked, he arranges a stop, rigidly connected with the driving shaft to strike against what he calls his retractor arm, and thus pulls the plug out on the tray. The third part of the motion is the swing of the plug on this driving shaft, as an axis; and from the details of his construction, the driving shaft, being at a considerable distance from the face of the breech, it will require a very large arc of revolution to swing the plug clear of the breech opening. To accomplish the revolutions of the driving shaft necessary for these three motions, it has been required, by the exigencies of his design, to use a long rack gearing with a pinion at the lower end of the driving shaft, in order that the swing of the lever arm may not be so great as to carry the operator's hand around under the gun, which would be an impracticable feature in service. In other words, he has to gear up for speed. My experience with guns at the proving ground showed me that unless a mechanism was geared up for power and not for speed the breech block could never be unlocked owing to the great expansion of the mutton tallow and asbestos, to say nothing of the gas-check cup of the De Bange gas check. The adjustment of the plug in its unlocked position depends upon the accurate placing of the top on the retractor shaft which impinges on

the retractor arm or a portion thereof. Such an adjustment is liable to be disarranged by wear or by an improper
179 location of this stop on the driving shaft. Again, in returning the plug from the tray to the gun he has found it necessary to use what I think he terms a trip-pin stirrup actuated by a cam and spring principle. This spring catch, which it really is, will operate while the plug is moving along the rear part of the tray, but as the plug approaches its seat in the gun, the cam, or at least the change in direction of certain bare surfaces which actuate this trip-pin wheel, causes that part of the pin or catch which locks the retractor arm to the driving shaft to gradually move so that the connection between the retractor arm and driving shaft become finally broken at a point near that desired. If all these parts are in accurate adjustment the plug may be set fully into its seat. The position of the plug in the gun when it is ready for turning, must be within two-hundredths of an inch of a certain point in order that the screw-threads may engage. This position in the Seabury mechanism is controlled by the adjustment of a small pin in a cam very close to the axis of motion of the parts. Such an adjustment is almost a mechanical impossibility. It may be made to work a few times in a model, but should the principle be actually applied to a gun it would certainly fail to work, because it is at this very point that a positive and a powerful action is required for the breech block. Besides all this, the large number of parts and general complication would cause me to pass an unfavorable judgment on the Seabury mechanism."

Adjourned to December 30th, 1893, at 10.30 a. m., at the same place.

NEW YORK, *December 30th*, 1893—10.30 a. m.

Met pursuant to adjournment.
Present: Counsel as before.

HENRY F. NEWBURY, in answer to Q. 21, says: I do not agree with Mr. Dashiell that the Seabury invention is inoperative, as he seems to be of the opinion that it is, and my reasons are as follows:

So far as concerns the use of the De Bange gas check in connection with the mechanism used to illustrate the invention particularly pointed out in claim 1 of the patent in suit, it is enough to say that it is no part or parcel of the Seabury invention particularly pointed out in the said first claim. This De Bange gas check is only one of the many forms of gas checks which may be
180 employed for the purpose of making the breech of the gun gas-tight at the time of the explosion caused by firing the gun.

It will be observed that the use of this particular form of gas check (the De Bange) requires that the breech block shall be moved to a greater distance to expose the breech of the gun than is the case when some other forms of gas check are employed, such as has been heretofore referred to in this case.

It will also be observed that, in defendant's model Exhibit Y, the

breech block is arranged for a different kind of gas check from that of the De Bange, and this is also the case in Complainants' Exhibits Models M, N and O, and consequently, in the case of the breech blocks of all these models there is less movement of the breech block required than would be the case if they were arranged for the De Bange gas check.

Mr. Dashiell seems to be of the opinion that from some unexplained reason the invention of said claim 1 necessarily requires an abnormal extent of movement of the parts in order that the breech block shall be swung sufficiently aside to expose the breech of the gun. Consequently the mechanism must be geared for speed instead of for power. In this I wholly disagree with Mr. Dashiell. There is nothing whatever in the invention of said claim 1 which requires anything of the kind. Furthermore, the patent in suit, as before explained, employs different forms of means to which the power or force is applied, in the first instance, and then transmitted so as to act upon the mechanism in the desired way to cause the breech-block retractor to operate as therein set forth. One of these forms of mechanism is, as before explained, composed of the grooved pulley P, which in connection with the wire rope attached to the gun carriage, is to operate the mechanism by the recoil and counter-recoil of the gun. This form of means is one which is not geared for speed instead of for power, but is, on the contrary, geared for power instead of for speed.

This fact is apparently wholly overlooked by Mr. Dashiell, as I am unable to find any reference whatever to it in his deposition.

The fact that the patent in suit shows different forms of means for the transmission or the application of power to operate, the combination of devices or elements, some of which means are geared for speed, and others are geared for power, clearly indicates that Mr. Dashiell is wholly in error in assuming that there is any-
181 thing contained in the patent in suit which requires that the mechanisms employed to illustrate his invention should be geared for speed instead of for power.

The fact that Mr. Dashiell mentions at length one of the forms of mechanism used to illustrate the invention of the patent in suit, and is entirely silent as to the other forms, seems to make his criticisms upon the Seabury invention, as pointed out in said claim 1, misleading, to say the least, and not a full statement of the facts.

When a mechanism is said to be geared for speed, it is meant that the power is applied as it were to the short end of the lever, and consequently power is sacrificed in order to obtain greater speed at the point where the work is to be done. When a mechanism is said to be geared for power, it is mean- that the power is applied as it were to the long end of the lever, and that speed is sacrificed in order to obtain power at the point where the work is to be done.

In other words, when a mechanism is geared for speed, the part where the work is to be done moves at a greater rate of speed than does the part where the power is applied, and when a mechanism is said to be geared for power instead of for speed the part where the

work is to be done moves at a less rate of speed than does the part where the power is applied.

As I understand the invention particularly pointed out in claim 1 of the patent in suit, it is wholly immaterial, so far as that invention is concerned, whether the mechanism embodying that invention is geared for power or for speed. My reasons for this understanding are as follows: In the first place, said claim 1 is entirely silent on this point, and, in the next place, the specification and drawings show and describe different forms of mechanism, one of which is geared for power, and two other- may be said to be geared for speed, consequently the words "substantially as described" cannot by any possibility indicate that one form of mechanism is to be preferred to the other; and, also, that one is as much a portion of the claim as is the other—that is, that this particular feature is not essential, and is wholly immaterial, so far as concerns said invention of claim 1 of the patent in suit.

An examination of Complainants' Exhibit Model L discloses the fact to be that the shaft of pintle, designated in the patent in suit as E., does not require the extent of movement which Mr. Dashiell in his said answer has assumed was absolutely essential. In
182 this model it will be seen that the part to which the force or power is applied—viz., the handle or crank arm—is attached directly to such shaft, and that the mechanism of this model is geared for power instead of for speed. Upon comparing this model L with the drawings of the patent in suit, it will be seen that it is in all essential respects the same as the mechanism shown in those drawings; so far as concerns the invention particularly pointed out in said claim 1, and more than this, the forms or substantial shapes of all the elements or devices which are named in said claim are substantially the same as those found in said drawings. That is, the shape of the arms composing the breech-block *rectator*, the device used to connect those arms with the shaft E, the breech-block carrier or tray, and the breech block itself, and furthermore the particular form or shape of the devices by which the breech block is rotated or given a partial turn to lock and unlock the same from the breech of the gun. Of course, as before explained, the shape of the means employed for the transmission of power to the several parts of the mechanism is different in this model L from what is shown in the drawings of the patent in suit; but, as before explained, the particular form of such means is wholly immaterial, and no part of the invention particularly pointed out in said claim 1.

This model L contains the invention shown and described in the patent in suit, and particularly pointed out in claim 1 thereof, as I think will be manifest upon the merest inspection of the same, and for the reason that it contains a breech-block operating mechanism for manipulating or handling a slotted or mutilated screw breech block, a breech block carrier hinged to the breech, and a breech-block retractor, also hinged to the breech, but capable of moving independently of the breech-block carrier when the breech block is to be withdrawn from the breech onto the carrier, and pushed there-

from into the breech, and also capable of moving with the breech-block carrier when said carrier, with the breech block upon it, is to be swung aside to expose the breech of the gun, and then to be returned into position to have the breech block pushed therefrom into the breech of the gun.

Mr. Dashiell in his said answer has considerable to say about what he is pleased to term the "spring catch" found in one of the forms of mechanism used to illustrate the invention of said claim 1, and which device is employed to connect the breech-block
183 retractor to the driving shaft. Regarding this device, he says it is "actuated by a cam and spring principle," and seems to lay considerable stress upon this device as rendering the invention of said claim 1 open to criticism. In this I do not agree with Mr. Dashiell, for the reason that, as I understand said invention, the particular shape or form of this device is no part of the invention, and, so far as the invention of claim 1 is concerned, any form or device, no matter what else it may be, may be employed for connecting the various parts together, is all that is required, so long as some form of means is employed for this purpose.

The only form of device to which the term "spring catch" could apply as set forth by Mr. Dashiell, is the one shown in Figs. 1 to 6 of the drawings of the patent in suit. In Figs. 7 and 8, another form of device is employed for connecting the breech-block retractor to the shaft or pintle E, and this is a positively operating device, and is unprovided with any spring whatever. Mr. Dashiell is entirely silent as to this fact, and seems to have overlooked the existence of this other form of device which is not open to his criticism applied to the first form.

The device which Mr. Dashiell has termed a "spring catch" for connecting the breech-block retractor to the shaft or pintle E, is found illustrated in Defendant's Exhibit Model Z, and the positively operating device shown in Figs 7 and 8 for doing the same work is found illustrated in Complainants' Exhibit Model L.

It is because of the above facts that I disagree with Mr. Dashiell as to his criticism of this point of the mechanism and also why I am compelled to the opinion that the form or shape of this device is wholly immaterial and no part whatever of the invention of claim 1 of the patent in suit.

Mr. Dashiell has pointed out the fact that the rack by means of which the breech block is caused to rotate or be given a partial turn to lock or unlock the breech block to or from the breech is driven by a crank arm and pitman, and, therefore, that the crank pin comes to a dead centre. In this connection it is enough to say that when the crank pin does come to a centre it has no work whatever to perform, as the breech is fully unlocked at that time. He also refers to the fact that with a crank arm and pitman there is a varying speed of movement of the rack which would not be the case if a gear wheel or a segment of a gear wheel meshed directly with the rack instead of employing the crank arm and pitman, and
184 refers to this as "lost motion." It is true that there is some difference in the extent of motion required of the two de-

vices, but it is comparatively slight and of no special consequence whatever.

Mr. Dashiell has something to say about the crank arm passing through a distance equal to the radius of a circle described by the crank arm, while with a segment of a gear used for moving this rack such segment would only travel through about one-quarter of the circumference described by the teeth of the wheel, and seems to think that there is a considerable difference in this extent of movement. In each case the device, whether crank arm or segment of a gear, travels approximately one-quarter of the circumference of a circle described by each, but, but, as before stated, there is a slight difference in the extent of travel, but it is of no consequence whatever, as I think is fully illustrated in Complainants' Exhibits Models L, M and N.

In view of the fact that a breech-block operating mechanism substantially the same as that found in Complainants' Exhibit Model O -s used in a five-inch gun at the Sandy Hook proving ground, and with the De Bange gas check, in which there is employed mutton tallow and asbestos, which mechanism is used with entire success, I cannot but believe that Mr. Dashiell is wholly in error regarding the action which such a gas check would be when the same is used in connection with the special form of device used to rotate or partially turn the breech block which is shown in the drawings of the patent in suit, and found illustrated in Defendant's Exhibit Model Z and Complainants' Exhibit Model L.

Complainants' Exhibits M, N and O, in my opinion, contain the invention shown and described and particularly pointed out in claim 1 of the patent in suit, and my reasons for this opinion are as follows: In each there is a breech-block operating mechanism adapted for manipulating or handling a slotted or mutilated screw breech block. In each there is a breech-block carrier hinged to the breech, and a breech-block retractor composed essentially of a lever which is at one point hinged to the breech of the gun, and at another point connected with the breech block, so that such breech-block retractor is capable of moving independently of the carrier when the block is to be withdrawn from the breech onto the carrier, and pushed therefrom into the breech by a direct pulling or pushing action as the case may be. This breech-block retractor is also capable of moving with the carrier when the breech block is upon
185 the same, and is to be swung aside and expose the breech, and is to be swung back again when the breech block is to be returned to the gun.

In forming this opinion I did not overlook the fact that there are differences in the details of construction of these several breech-block operating mechanisms; but as I understand the matter, and as I explained at length my reasons, these details of construction are not any part of or essential to the invention shown and described in the patent in suit, and particularly pointed out in claim 1 thereof. As before explained, all that is required of said invention, so far as concerns these details of construction, is that some means shall be employed whereby when force or power is applied at

one point in the first instance, such force may be transmitted to the several parts of the mechanism so that they shall perform their several functions as set forth in the patent in suit, and this is done in each one of the mechanism of these models notwithstanding the fact that the means employed for transmitting such force or power, and the shape of the parts, and the details of the construction differ, as is manifest upon the merest inspection of such models. The combination of devices or elements is in all substantial and essential respects the same in each and all of the said models including model L, or in other words these four Complainants' Exhibit Models L, M, N and O contain the same combination of devices or elements which are composed of substantially the same elements or devices operating the same way to produce the same result.

I do not think it necessary to go into these differences of details of construction in detail because I think it will be manifest upon the merest inspection that such differences are immaterial, and also that by the same inspection it will be seen that there is the same combination of devices or elements operating in substantially the same way to produce the same result.

22 Q. Is the rack and pinion shown in the Seabury patent, whereby the shaft or pintle is turned, an essential element of the first claim, or is it an essential element of the Seabury invention?

A. The rack and pinion referred to in the question is one of the details of construction to which I have heretofore referred, and, as I understand the matter, they are no part of the Seabury invention shown and described in the patent in suit, and particularly pointed out in claim 1 thereof.

186 My reason for this opinion, I think, will be apparent from what I have already said, and, therefore, they need not be repeated here.

23 Q. Has the Defendant's Exhibit Model X some of the same defects which Mr. Dashiell attributes to the Seabury construction?

A. Yes, I believe it has; such, for instance, as the disconnection between the segmental rack upon the breech block and the segmental gear upon the breech of the gun, as well as the disconnection between the segmental gear wheel connected with the breech-block carrier and the one attached to the breech of the gun, including the liability of one to be moved relatively to the other when so disconnected, and thus interfere with the proper working of the gun.

24 Q. Mr. Dashiell has pointed out a principle of operation which he claims is entirely new with him, by which, as he puts it, there is no "lost motion" during the time the breech block is being turned to lock or unlock the same and withdrawing the block onto the tray and pushing it therefrom. Do you agree with his statements wherein he refers to this "principle of operation"?

A. I do not agree with Mr. Dashiell as to what he terms this new principle of operation being new and original with him.

Mr. Dashiell, when asked as to what part or portion of his design which originated with him and which was not previously known, said:

"In all rapid-fire mechanism on this slotted-screw principle

known to me, the unlocking of the plug and the withdrawing of the tray" (it onto the tray) "and *vice versa*, are motions performed by what is commonly known as a step-by-step or lost-motion mechanism; that is, generally speaking, the plug is first turned while that part of the mechanism which is intended to withdraw it remains inoperative; and, again, as the plug is being put into the gun, the plug is pushed along the tray by one part of the mechanism, while that part which is to turn it for locking remains inoperative, waiting for the plug to come to it, so to speak."

One of defendant's exhibits and alleged anticipating patents, viz., the Nordenfelt United States patent No. 384,537, dated June 12, 1888, shows and describes a breech-block operating mechanism for handling a mutilated or slotted breech block or plug in which

187 the motions referred to by Mr. Dashiell in the above quotation are not performed by what he is pleased to term "a step-by-step or lost-motion mechanism."

The mechanism shown and described in this Nordenfelt U. S. patent I have heretofore explained, but I will here say, in the language of Mr. Dashiell, "there are two forces at work upon the plug at all times, while the plug is either being unlocked or translated—one to revolve the plug, the other to translate it. In other words, there is no lost motion of any kind, and the adjustment of the plug with respect to the gun, depends upon the gun itself, and its parts which engage this plug, and not upon the tray." This language of Mr. Dashiell's, which is found immediately after that which I have quoted in this answer, was used in connection with his design of mechanism, but it applys as aptly to this Nordenfelt mechanism as it does to the mechanism illustrated by defendant's model, Exhibit Y.

The term "translate," as used by Mr. Dashiell, I understand to mean, and refer to, the movement of the breech block from the gun onto the tray.

Another one of the alleged anticipating patents, the Canet British patent No. 7434, of 1887, also shows and describes a breech-block operating mechanism in which there are two forces at work upon the breech block or plug at all times while the plug is either being unlocked or withdrawn from the gun, one of these forces acting to revolve the plug, and the other to withdraw it. In other words, there is not a step-by-step or lost-motion mechanism, as set forth by Mr. Dashiell, found in this breech-block operating mechanism of the Canet British patent No. 7434, of 1887.

This same idea of a breech-block operating mechanism constructed so that two forces are at work on the breech block or plug at all times, one of such forces tending to rotate the block or plug and the other to withdraw it from the breech of the gun, is found in Complainants' Exhibit Sketches A^2 and A^3. In these sketches the cam surfaces acting on the pin or arm attached to the breech plug is at all times acting either to rotate the breech block or plug or withdraw it from the breech of the gun.

An exceedingly practicable embodiment of this idea, as shown in said sketches A^2 and A^3, is found in Complainants' Exhibit Model

O. In the breech-block operating mechanism illustrated in said model O there are two forces at work at all times, one of which tends to rotate or partially turn the breech block and the other to withdraw the block from the gun.

188 In this respect the action of the mechanism during the time the breech block or plug is rotated or partially turned and moved into and out of the gun is identical with the action, in the same respects, of the mechanism illustrated in Defendant's Exhibit Model Y, which, it will be remembered, illustrates the Dashiell construction and the Dashiell gun, as made.

Because of the above facts I am compelled to disagree with Mr. Dashiell in that he was the first to originate a breech-block operating mechanism in which his so-called new principle was employed.

Mr. Dashiell seems to be of the opinion that this so-called new principle of operation is of considerable importance in connection with the manipulation or handling of a breech block of the mutilated or screw pattern or principle. As he understands the operation, he seems to think that the breech block is being forced outward in a rearward direction from the very beginning of the rotating or partial turning of the breech block to unlock it from the breech, and because of this the friction occasioned by the interlocking of the screw-threads, one with the other, is lessened and the breech block is consequently more easily withdrawn.

The tendency of the explosion is to force the breech block in a rearward direction, so as to cause the screw-threads upon the side in contact when moving in that direction to be brought in exceedingly close contact, and if there was any such extent of rearward movement as Mr. Dashiell seems to think there would be by the action of his design of mechanism, then, instead of lessening this friction, it would simply increase it, and instead of being a benefit, as he assumes, it would be an injury.

I do not agree with Mr. Dashiell as to the importance of this particular feature, because in the first place I do not think that there is any such extent of rearward action on the breech block as Mr. Dashiell assumes, and, furthermore, whatever the extent of this rearward pulling action is, it is simply transferring the friction from one side of the screw-threads to the other, and consequently there is no appreciable difference owing to this particular feature of construction.

Because of these facts I am compelled to the opinion that this feature of construction is not new and original with Mr. Dashiell, and also, that it is of no special importance, so far as concerns the case of operation of the breech block.

189 25 Q. Will you look at the sketches Complainants' Exhibits A^2 and A^3 to which you have just referred and the testimony of Lieut. Seabury relating to the same and state whether or not the fundamental idea of the Seabury invention claimed in the first claim is shown in these drawings?

A. In my opinion the germ, as it were, or the fundamental idea of the Seabury invention shown and described in the patent in suit,

and particularly pointed out in claim 1 thereof, is shown in the drawings referred to in the question.

My reason for this opinion is, that those sketches taken in connection with Lieut. Seabury's testimony as to what he desired to accomplish by the several parts or devices indicated in those sketches, there is found a breech-block operating mechanism provided with a breech-block retractor composed essentially of a lever which at one point is to be hinged to the breech of the gun, and at another point connected with the breech block so as to be capable of moving independently of the breech-block carrier when the breech block is to be withdrawn from the breech onto the carrier and pushed therefrom into the breech, and also capable of moving with the breech-block carrier when the breech block isupon it to be swung aside and back again, all combined together as called for as in said claim 1.

26 Q. Please state whether or not, in your opinion, a mechanical draughtsman accustomed to lay out cams or cam surfaces would be enabled, by the placing before him of said sketches A^2 and A^3, and the testimony of Lieut. Seabury relating thereto, and to the art as it existed in 1883, to lay out and draw upon paper the necessary form or shape of cam surfaces, or slots, to cause the lever marked C in those sketches to do the work Lieut. Seabury desired that it should do.

A. From my knowledge of, and practice in making mechanical drawings, I am of the opinion that a draughtsman accustomed to do the work in the question would have no difficulty whatever in laying out and drawing upon paper, the necessary form or shape of cam surfaces or slots required to do the work of rotating or partially turning the breech block, designated in those sketches as A, in the breech block B, so as to unlock it therefrom, and then to withdraw the breech block from the breech onto the tray, and then to swing the tray, with the breech block upon it, to one side to expose the breech for the purposes of loading, by the application of force or
190 power, in the first instance, at a single point in the mechanism; viz., to the free end of the lever marked C in those sketches.

To return the breech block to the gun, force or power is applied at the same point as before, but in an opposite direction, when the tray with the breech block upon it would be swung back again, and the breech block pushed from the breech-block carrier into the breech, and partially rotated or turned, to lock the block into the gun by the means of the cam slots or surfaces so laid out and constructed for this purpose.

That is, a draughtsman thus accustomed to laying out cam surfaces would, by reason of his knowledge and familiarity with the various forms and shapes which such surfaces can take on, and which are necessary for the performance of any given work, know, without further instruction than is contained in those sketches and Lieut. Seabury's testimony relating thereto and to the art as it existed prior to 1883, what to do to draw upon paper the necessary form or shape of such surfaces to do the work which Lieut. Seabury

testified that he desired to be done by the parts indicated in these sketches.

In order to make it plain that this opinion is well founded on my part, I gave to a draughtsman by the name of Raphael Netter, who does business in this city, the sketches marked Complainants' Exhibits A^2 and A^3, and read to him those portions of Lieut. Seabury's testimony which related to those sketches and the prior art as it existed in 1883, and asked him if he would make a drawing showing the necessary shape or form of cam surfaces required to do the work of the parts indicated in those sketches was intended to do by Lieut. Seabury. He replied that he would, and wanted to know when I wanted it. I named a time, and told him that I wanted to see the drawing in pencil at that time. At the time mentioned by me I called upon him, and he showed me a drawing in pencil having the necessary cam surfaces to do the work above explained. This drawing was in the rough, and it contained the positions of the several parts in dotted lines at different points in the operation of the mechanism.

After carefully examining the said drawings I requested him to make a tracing in ink showing the several parts as clearly as he could do. The tracing thus made I now produce. I had had Mr. Netter make the enlarged drawing of Fig. 6 of the Sauvee British patent 9453, of 1887, previous to the making of the drawing just produced, so that he knew what a breech block of the slotted or mutilated screw pattern or principle was, and the form of breech-block carrier there shown. I also, I believe, showed Mr. Netter the Farcot English patent 3402, of 1887, so that he might see the general relation of the breech-block carrier, breech block and breech of the gun there shown. So far as I know, this is all the knowledge that Mr. Netter had regarding this case or of any of the Seabury patents or inventions.

191

The drawing mentioned is offered in evidence and marked "Complainants' Exhibit Development Drawing of Seabury Sketches, December 30, 1893, W. E. Z., spec. ex."

(Witness continues:) This Exhibit Development Drawing of Seabury Sketches contains two figures. Fig. 1 is a view partly in section, and partly in plan, of the Exhibit Sketch A^2 where the lever is located above the breech block. This Fig. 1 shows the breech in section and the breech block in full, and also shows the lever with the cam surfaces or slots in full lines, these several parts in this drawing are lettered to correspond with the lettering of the parts found in the sketch A^2. This Fig. 1 shows the positions of the lever C and its connected parts at the different positions the same occupy when the breech block is partially turned or rotated to unlock the same, and then when the breech block is fully withdrawn from the breech onto the breech-block carrier, and still again when the lever C and the breech block and carrier are in position, when the carrier and block are fully swung aside to expose the breech of the gun. These several positions of the lever C and the other parts, at the times

named, appear in the order named, beginning with the position in dotted line nearest to the lever shown in full lines.

Fig. 2 is an end elevation of the mechanism shown in Fig. 1, with the position of the pin D when the breech block is in the unlocked position shown in dotted lines, which position, it will be remembered, so far as Fig. 2 is concerned, is the same until the breech block is fully withdrawn from the breech onto the carrier.

27 Q. Mr. Bartlett said, respecting the U. S. patent to Shenkl, No. 9943 of 1853, that he considered "the device, as a whole, as very suggestive, and as showing a mutilated-screw breech which can be manipulated by a continuous movement of the hand lever." Do you agree with that statement; if not, why not?

A. I do not agree with the statement of Mr. Bartlett referred
192 to in the question. I have heretofore explained at length the gun shown in this Shenkl patent, and, it will be remembered, it is one which is cut into nearly midway of its length, and the two parts are secured together by a mutilated or slotted screw.

My reason for disagreeing with Mr. Bartlett is that the Shenkl patent describes the operation of unlocking the two parts and separating them, not by the continuous movement of a lever, but by a back-and-forth movement of a lever, when the two parts of the gun are to be separated, and another back-and-forth movement of the same lever, when the two parts are to be secured together again. Therefore, Mr. Bartlett's statement is contrary to the description of the Shenkl patent, and because of this I cannot agree with him.

Furthermore, I cannot agree with Mr. Bartlett that this Shenkl patent is "suggestive" if he means to intimate that there is anything contained in such patent which is suggestive of the invention of claim 1 of the patent in suit. I have heretofore explained that this Shenkl patent does not show and describe a single element or device necessary for the invention of said claim 1. Therefore, it is not, in my opinion, at all suggestive of such invention, and, as before explained, has no bearing whatever upon the invention particularly pointed out in said claim 1.

28 Q. Mr. Bartlett also said, regarding the U. S. patent to Cochran that is indicated "that as far back as 1859 it was known in this art that mechanism other than a direct pull could be used to carry the breech block away from the gun." What is the fact in respect to the advance in means of opening the breech at the date mentioned by Mr. Bartlett?

A. In my opinion there was no advance whatever made by anything shown or described in the said Cochran patent, so far as concerns the point mentioned by Mr. Bartlett.

I have heretofore explained at length the mechanism shown in this Cochran patent, and the device there set forth for withdrawing the breech block or plug from the gun is one which, instead of being any advance in this art, is, in my opinion, on the contrary, a departure which is not in the nature of an advance. In that mechanism the breech block or plug and the breech-block carrier, as well as the slide which supports them, has to be moved bodily in a rearward direction in order to withdraw the plug from the breech. The

patent itself does not show any mechanism for doing this, but simply contains a statement that the slide so mentioned can be pro-
193 vided with a rack and pinion to move it back and forth, thus obviously recognizing the abnormal amount of friction that there must be in that mechanism in order to move it in either direction. Because of these facts I am of the opinion that the said Cochran patent does not show any advance whatever in the art.

29 Q. Mr. Bartlett referred to U. S. Nordenfelt patent No. 384,537, dated June 12, 1888, and seemed to be of the opinion that said patent shows a retractor which is the mechanical equivalent of the Seabury retractor. What is your view about that?

A. I have heretofore at considerable length explained the mechanism shown and described in this Nordenfelt U. S. patent, and from such explanation it will be seen that the sleeve bearing the pin or stud which works in the helicoidal slot or recess of the breech-plug of that mechanism is an entirely different device from a breech-block retractor which is composed essentially of a lever which at one point is hinged to the breech of the gun, and at another point connected to the breech block, and because of this fact, and the further facts set forth by me relating to this mechanism of this Nordenfelt U. S. patent wherein I have shown that such mechanism did not contain a breech-block retractor, as called for in the patent in suit, I am compelled to be of the opinion that the sleeve and pin is not the mechanical equivalent of the breech-block retractor, shown and described in the patent in suit, and particularly referred to in claim 1 thereof. The two devices do not act upon the same principle or mode of operation—that is, the device of the Nordenfelt U. S. patent acts upon the screw or inclined-plane principle or mode of operation, while the device of the patent in suit acts upon the lever principle—therefore the two are not known mechanical equivalents, one for the other. Of course, under some circumstances they might be known as "substitute devices"—that is, where one device might be substituted for the other for doing certain work, but this is not the case here.

Because of these facts I am compelled to disagree with Mr. Bartlett as to the Nordenfelt U. S. patent showing a retractor which is the mechanical equivalent of the Seabury retractor.

30 Q. Mr. Bartlett seems to be of the opinion that the Sauvee British patent No. 9453 of 1887 shows, as he thinks, element for element of claim 1 of the Seabury patent in suit. What is the conspicuous error of Mr. Bartlett in the view that he takes of this Sauvee construction?

194 A. I have heretofore explained at considerable length the breech-block operating mechanism shown and described in this Sauvee British patent No. 9453, of 1887, and also pointed out why said mechanism did not contain a breech-block retractor, composed essentially of a lever which at one point is hinged to the breech of the gun, and at another point connected with the breech block, as called for in said claim 1. As I understand the matter, the conspicuous error of Mr. Bartlett's view regarding the Sauvee construction, is, that he has considered any and every device, no

matter what its principle of operation might be, which would withdraw the breech block from the breech, as fulfilling all of the requirements of the breech-block retractor referred to in said claim 1. In this case Mr. Bartlett seemed to assume that a lever which is not hinged to the breech of the gun at all, and if it can be said to be hinged to anything is hinged to the breech-lock itself, is the breech-block retractor referred to in said claim 1. Manifestly, the breech-block retractor referred to in said claim 1 must be hinged to the breech, as before explained by me, and, consequently, a device which is not hinged to the breech, as is the case with this Sauvee construction, is not what is called for regarding the breech-block retractor referred to in said claim 1. This may be said to be the conspicuous error of Mr. Bartlett's view of this Sauvee construction of the British patent No. 9453 of 1887.

31 Q. Mr. Bartlett also thought that the Sauvee British patent No. 9813 of 1887 showed element for element of claim 1 of the Seabury patent in suit. What is the conspicuous error of Mr. Bartlett in the view that he takes of this Sauvee construction?

A. The conspicuous error of Mr. Bartlett's view of this construction of the Sauvee No. 9813 of 1887 is substantially the same as mentioned in my last preceding answer—that is, he has assumed that any and every device, no matter what its principle of operation might be, which would withdraw the breech block from the breech, was one fulfilling all of the requirements of the breech-block retractor referred to in said claim 1.

In this case Mr. Bartlett has assumed that a gear wheel mounted upon a shaft turning in bearings attached to the gun, and meshing with a rack secured longitudinally of the breech block, is a breech-block retractor composed essentially of a lever, which at one point is hinged to the breech, and at another point connected with the breech block.

195 I think it will be manifest to most any one that the gear wheel F and rack K of this Sauvee construction is not such a breech-block retractor as is referred to in claim 1 of the patent in suit, and also that such gear wheel and rack are not the mechanical equivalents of the breech-block retractor of said claim 1, which is a device composed essentially of a lever which at one point is hinged to the breech and at another point connected with the breech block.

In one case the connection with the breech block is permanent and in the other it is constantly being made and broken, and this is absolutely required, owing to the difference in the two mechanical devices. Also in one case one mechanical device is capable of accomplishing work which the other one cannot do and *vice versa*. Because of these facts the two devices are not known and recognized mechanical equivalents, one for the other. Of course under some circumstances one device may be substituted for the other, but this does not make them the mechanical equivalents, one for the other, and in the present case this substitution could not take place.

It is because of these facts that I am of the opinion that Mr. Bartlett has made a conspicuous error regarding this Sauvee mechanism and that such error lies in assuming that the said gear wheel and

rack fulfills all of the conditions, set forth in the patent in suit, for the breech-block retractor referred to in said claim 1.

32 Q. Mr. Bartlett expressed the opinion that the Nordenfelt British patent No. 7195 of May 17, 1887, shows the exact construction referred to in claim 1 of the Seabury patent. Will you if you can refer to the particular error made by Mr. Bartlett?

A. In my opinion a particular error made by Mr. Bartlett is that he has assumed that the said Nordenfelt British patent No. 7195 of 1887 showed and described an operative mechanism.

I have heretofore explained why this is not true, and I will say that the model offered in evidence herein on behalf of the defendant, which illustrates what is shown and described in this Nordenfelt British patent No. 7195 of 1887, makes it perfectly plain that that patent does not describe an operative mechanism, and also that Mr. Bartlett was in error in assuming that it did.

33 Q. State whether or not the model you have just referred to of this Nordenfelt British patent No. 7195 of 1887, is capable of
196 operation by the means provided, and also whether or not a gun constructed according to the specification and drawings of said Nordenfelt patent would be an operative machine.

A. The said model illustrating what is shown and described in the said Nordenfelt British patent No. 7195 of 1887, was not capable of operation by the means provided, when I examined the same in the office of the counsel for defendant herein, and I understand from the testimony of Mr. Hough, one of defendant's witnesses, that at the time when it was offered in evidence the said model was incapable of being operated by the means provided for this purpose.

The said model bore upon it, when I examined it, directions for using it, which are not found in the said British patent No. 7195 of 1887, which directions, I understand, from Mr. Hough's testimony, was placed thereon by Mr. Hough himself, because, without them, the thing could not be operated without derangement. These directions placed upon said model by Mr. Hough make it apparent that by no possibility could the said model be operated by the application of power or force at a single point or to a single part, as for instance the handle provided for this purpose, and it is because the model cannot be so operative, and that it lacks the necessary means to make it an operative structure. As before explained the principal difficulty with it is that when the breech block is once withdrawn from the breech it cannot be returned thereinto by the same means which withdrew it, and that this has to be done by hand.

Because of these facts I am compelled to the opinion that a gun constructed according to the specification and drawings of the said Nordenfelt patent would be an inoperative machine, and, so far as the breech-block operating mechanism is concerned, it would be entirely worthless. I think it will be manifest to any one that a full-sized gun would be no more operative than is the said Nordenfelt model offered in evidence herein on behalf of the defendant.

34 Q. Mr. Bartlett also thought the British Farcot patent No. 3402, of 1887, showed a mechanism similar to that of the Seabury

patent in suit, and one which contained everything set forth in terms of claim 1 of said Seabury patent, and defendant's witness Mr. Dodge expressed the same opinion. State whether or not you agree with these gentlemen, and give your reasons.

A. I do not agree with Messrs. Bartlett and Dodge defendant's experts in any such opinion as is referred to in the question,
197 and, I think it will be apparent, from what I have heretofore said regarding this Farcot British patent in connection with the invention shown and described in the patent in suit, and particularly pointed out in claim 1 thereof, without any further reference at this point, why I cannot agree with any such opinion.

35 Q. Mr. Bartlett said, in substance, that he thought there was as much resemblance between the Farcot structure and Defendant's Exhibit Model Y as there is resemblance between model Y and model Z. What is your opinion about that?

A. In my opinion Mr. Bartlett is clearly in error in this, because, as I have before explained, the said Farcot structure does not contain a breech-block retractor hinged to the breech, as called for in said claim 1, while Defendant's Exhibit Model Y does contain such a breech-block retractor, therefore the said Farcourt structure and Defendant's Exhibit Model Y are essentially different.

I have heretofore pointed out at length, with my reasons for the opinion, that said defendant's model Y did contain, in substance, the invention shown and described in the patent in suit, and particularly recited in claim 1 thereof, and said model Z has been offered in evidence herein, and the same purports to illustrate one form of the mechanisms used to illustrate the invention of said claim 1; therefore, in all essential and material respects, so far as concerns the invention of said claim 1, the said models Y and Z are identical.

It is owing to these facts that I am compelled to disagree from Mr. Bartlett regarding the resemblances between the said Farcot structure and Defendant's Exhibit- Model Y and Model Z.

36 Q. Mr. Bartlett said that if the Seabury first claim was interpreted broadly it would, in his opinion, cover such a construction as defendant's model, Exhibit Y, but in view of the patents to which he referred, and especially to the Nordenfelt British patent No. 7195, such claim was incapable of a broad interpretation, because when so construed it covered the alleged anticipating devices, and he said further, that Farcot, Canet, Sauvee and Nordenfelt all showed constructions to which the terms of claim 1 would apply as well as they did to the Seabury construction. Do you agree with that opinion, and if not, state why not?

A. I do not agree with any such opinion, whether it is expressed by Mr. Bartlett or Mr. Dodge or any one else.

I have heretofore explained at length the errors Messrs. Bartlett and Dodge have fallen into regarding the alleged antici-
198 pating patents and also explained the mechanisms shown and described in each one of those patents in detail, and, as a matter of fact, no one of said alleged anticipating patents has any bearing whatever upon the invention particularly pointed out in

claim 1 thereof, and have given my reasons at length for so stating, therefore, no one of said alleged anticipating patents, or all of them taken together, limit or abridge the scope of the invention of said claim 1 as it is therein in terms set forth.

From this it will be seen that any interpretation which is to be put upon the language of said claim 1, and which would in any way make it cover any of the constructions found in the alleged anticipating patents would have to be such as would ignore the character of construction and mode of operation of the breech-block retractor set forth in the patent in suit and particularly referred to in claim 1 thereof. I think my reasons for so stating will be apparent from what I have heretofore said regarding the invention particularly pointed out in said claim 1, and the alleged anticipating patents, as well as regarding the erroneous assumptions made by Mr. Bartlett in connection with the most conspicuous examples of such alleged anticipating patents.

Adjourned to Tuesday, January 2, 1894, 11 o'clock a. m., at the same place.

NEW YORK, *January 2d*, 1894—11 o'clock.

Met pursuant to adjournment.
Present: Counsel as before.

HENRY F. NEWBURY, being further examined, says:

37 Q. Mr. Bartlett refers to certain details of construction which are found in the Seabury gun, as shown and described in the specification of the patent in suit, and which he said were not in the Defendant's Exhibit Model Y. Will you state whether or not those details of construction are material to the operation or combination of devices or elements particularly recited in claim 1 of the Seabury patent in suit?

A. The details of construction to which Mr. Bartlett particularly referred in his comparison of Defendant's Exhibits Models Y and Z are details of construction to which I have heretofore referred at considerable length in connection with Mr. Dashiell's testimony, and also in connection with the prior state of the art. In
199 my opinion, those details of construction are immaterial to the operation of the combination of devices or elements particularly pointed out in claim 1 of the patent in suit, and my reasons for this opinion, I think, are apparent from what I have heretofore said, and the facts heretofore pointed out in connection with such details of construction, and need not be again repeated.

38 Q. Upon the understanding that you have given of the first claim of the Seabury patent in suit, in your opinion, would the Farcot, Canet, Sauvee or Nordenfelt guns, or any of the guns shown and described in any of the alleged anticipating patents, if made after the date of the Seabury invention, infringe the first claim of that patent?

A. In my opinion, no one of the several patents specifically named in the question, or referred to herein as alleged anticipating patents, show and describe a gun which, if made after the granting

of the Seabury patent in suit, would contain, in substance, the combination of devices or elements particularly pointed out in claim 1 thereof.

My reasons are substantially those given when considering the several alleged anticipating patents, and their bearing upon the invention particularly pointed out in claim 1 of the patent in suit. It is enough to say at this time that no one of the said alleged anticipating patents contain a breech-block retractor composed essentially of a lever, which at one point is hinged to the breech of the gun, and at another point connected with the breech block, so that upon the application of force or power, in the first instance, at one point or part of the mechanism, such power is transmitted to said breech-block retractor, so that it is capable of moving independently of the breech-block carrier when the breech block is to be withdrawn from the breech onto the carrier, or is to be pushed therefrom into the gun, and also capable of moving with the breech-block carrier when the breech block is thereon.

Cross-examined by Mr. PHILLIPS:

39 X Q. Do I understand you to say that the pin for attaching the breech-block carrier to the breech, and afterwards the breech block to the carrier, are common devices to which anybody may resort?

A. A pin or bolt *per se*, of course, is a very common device, and has been used for attaching breech-block carrier to the breech of the gun prior to the date of the Seabury invention particularly pointed out in claim 1 of the patent in suit. I hardly under-
200 stand that portion of the question which relates to the attaching of the breech block to the carrier.

40 X Q. I mean the spring catch or latch-pin.

A. As I now understand what counsel refers to, I would say that I understand that a spring catch or latch-pin which performs substantially two functions, first to latch or lock the breech-block carrier to the breech of the gun, and also to latch or lock the breech block to the carrier, when it is withdrawn fully upon the carrier, is a device that was old prior to the date of the Seabury invention of the patent in suit. I believe that this is the acknowledged state of the art in the patent in suit, at least I so understand it to be.

41 X Q. I understand that Mr. Seabury adds to the devices mentioned in his patent a catch to retain the carrier in its place after being swung aside, as being a matter of value to prevent the carrier from returning of its motion in time of storm on shipboard. Was it within the province of merely ordinary good mechanical skill to add that catch for the purposes given or any other?

A. The catch referred to in the question is one which I understand is shown in the drawings, but it is no part of the invention shown and described in the patent in suit and particularly pointed out in claim 1, as I understand the matter. Simply applying a catch to hold or retain the carrier when it has once been swung aside in such position, after the mental conception of its desirability

is had, would, of course, be within the ordinary skill of a mechanic to supply such catch to so hold the carrier in its open position.

42 X Q. If the double-spring catch on the tray had not been indicated in the specification or drawings, would it under such circumstance have been no more than an obvious method of doing a necessary thing implied in the patent, and open to the mechanical ingenuity of any ordinary skillful workman?

A. As I understand the matter, the prior state of the art, upon which Lieut. Seabury built, included a spring catch of the character referred to in the question as a part of such prior mechanism, when breech blocks of the slotted or mutilated screw pattern or principle were operated by the three separate and distinct motions, as referred to in the specification of the patent in suit.

With this understanding of the art if, by some inadvertence, this double-spring catch, which is to serve the double function referred to, viz., of latching or locking the breech-block carrier to the
201 breech of the gun, and also of locking the breech block onto the carrier when it is fully withdrawn thereupon, were omitted from the specification and drawings, I should then be of the opinion that the supplying of this well-known device, for serving the same purpose in the same connection that it had always served, as within the skill or mechanical ingenuity of a workman.

43 X Q. Have you before you the drawings of the No-denfelt patent No. 7195?

A. I have.

44 X Q. That device operates satisfactorily for the purpose of revolving the breech block, extracting the breech block and to swing the carrier aside?

A. It would, if it were provided with the double-spring catch just heretofore referred to by me.

My criticism of this mechanism of the Nordenfelt British patent No. 7195 of 1887 has nothing whatever to do with the lack of such a double-spring latch, but has to do, as heretofore explained, with the inability of the mechanism to return the breech block to the gun.

45 X Q. During the period in which the revolution of the lever rotates the breech block in the Nordenfelt device, a cam attached to the spindle revolves so as to lock or bolt underneath the extracting arm to that arm, and by that locking the two succeeding movements of extracting the breech block and swinging the carrier aside are performed. Is that not correct?

A. No, it is not. Because there is no locking whatever of the parts as that term is ordinarily understood.

There is a crank arm, as it is more properly termed, bearing a stud, which stud comes in contact with a sliding part, which sliding part in turn contacts with an abutment upon an arm connected with the breech block, so that, as a matter of fact, in one direction there is an abutment provided for this crank arm, so that whatever is in contact with such abutment must necessarily move in one direction, but upon the application of force in the reverse direction there is nothing to prevent the separation of this crank arm from its abut-

ment, and consequently there are no means employed for returning the breech block to the gun, except by the old hand method; that is, applying the hand of the operator directly to the breech block, or some other part of the mechanism other than that to which the power or force should be employed.

202 46 X Q. Looking at Fig. 4 of Nordenfelt No. 7195, does not the bolt when pushed by the crank arm against the socket of the retractor display two shoulders, one for operating to withdraw the breech block and swing aside the tray, and the other for returning the tray and breech block, and would not this device have been as effective for the return movement as for the first movements, except for the slipping of the bolt along the ways upon the under surface of the retractor?

A. The part which I understand counsel to refer to by the name bolt is not provided with two shoulders, one for operating to withdraw the breech block and swing the tray aside, and the other for returning the tray and breech block. This part termed a bolt is a sliding piece of material provided with ways in which it can slide back and forth. In sliding in one direction the end of this so-called bolt abuts against a portion of a sleeve or socket mounted upon the driving shaft and is prevented by such contact from further movement in that direction. There is nothing provided, so far as I can learn, to prevent this so-called sliding bolt from moving in an opposite direction until it has entirely left its ways.

This so-called bolt or sliding block is provided with a groove arranged at an angle to the direction of such movement of block or bolt, and also tangentially to the circle described by the stud or roller upon the crank arm. The result of this arrang-ment of slot relatively to the direction of movement of the so-called bolt or sliding block, and also to the direction of the movement of the stud upon the crank arm, is that such stud as it moves in a circle, the axis of which is the axis of the driving shaft, first engages with the open end of the slot, and as it passes into the slot and along its length, this block or bolt is made to slide in its ways toward the sleeve or socket mounted upon the driving shaft, and this movement continues until the stud has practically reached the opposite end of the slot, and the movement of the block is arrested by its contact with said sleeve or socket.

Upon the application of power or force to the handle upon the driving shaft there is no provision made for holding the sliding bolt or block in position abutting against such sleeve or socket, and, therefore, immediately upon the application of such force, the first tendency is for the stud or roller upon said crank arm to act upon the opposite side of the slot in the so-called bolt or sliding block, and thus cause such sliding block or bolt to move in its ways until the said stud leaves this slot which, of course, is at the point where

203 it first enters the slot, and there is nothing to return the breech-block carrier and breech block to the gun, and it requires that the mechanism shall be manipulated somewhat upon the plan given in the direction attached to the model of this thing which is shown and described in said Nordenfelt British

patent No. 7195 of 1887, which model I saw at the office of defendant's counsel, as before explained.

The slipping of this so-called bolt, referred to in the question, is the inevitable result of the construction shown and described in the said Nordenfeldt patent, and it renders the said model, which represents what is shown and described in the Nordenfeldt patent, wholly inoperative, and there is no suggestion anywhere contained in said patent of anything which would remedy this inevitable result—that is, of the slipping of such so-called bolt or sliding block. The result is precisely the same as would be the case if the stud attached to such crank arm came in simple contact with a rigid piece or part of the arm to which this sliding piece, or so-called bolt, is attached. Or, in other words, the result is the same as it would be if such sliding block or so-called bolt was made rigid and unprovided with slot, before referred to, in which case of course the said crank arm would be moved relatively to the driving shaft so as to contact with such piece at the proper time.

Of course, if some means had been provided, which has not been done and of which there is not the slightest suggestion in this Nordenfelt patent, by which the tray and breech block could be effectually returned to their respective places, then under such circumstances one movement, or rather the movement of the parts in one direction, would be as effective as in the other direction, but so long as there is a failure to provide means by which the breech block and carrier can be returned to their respective places, the said Nordenfelt patent fails to show and describe an operative structure.

47 X Q. After the bolt has become, in the language of the Nordenfelt patent, locked with the retractor and axis or spindle, could not a spring catch be applied upon the upper surface of the retracting arm, and having a head at the end of the spring nearest the spindle projecting perpendicularly above and below through a perforation through the retractor, the effect of which would be to prevent the bolt from slipping, there being, when such locking has been effected, immediately beneath the perforation a cavity in the upper surface of the bolt into which the lower head of the spring catch would penetrate. For example, suppose that the jacket
204 around the spindle, just above that of the retractor, which jacket is a part of the lower bracket, attached to the breech of the gun, should be provided with an extension or flange that would cover the head of the spring catch in question, and working smoothly upon the upper surface of the retractor, suppose that extension to commence at the point where its right-hand end is just over the head of the spring catch at the time when the retractor begins to move, would not such extension depress the upper head of the catch and thrust the lower end into the bolt to remain there until at the return movement the retractor has reached the point at which it ceases to move, and the pin then become disengaged from the bolt, which would slip aside. I mean to say that the extension upon the bracket socket beginning as above continues with the same smooth horizontal surface so far as to cover the head of the

spring catch when the tray has been swung aside to the farthest extent.

A. I do not sufficiently understand just what mechanism counsel has in mind by his question, and therefore cannot attempt to answer whether such a thing as he has in mind can or cannot be done. The question is altogether too indefinite, in its present state, for me to know just what the mechanism is that counsel has in mind. If he will present me with drawings of such mechanism showing the relation of the working parts at different portions of the operation I shall be pleased to consider such mechanism and give any opinion that I may have concerning the same.

Adjourned to January 3d, 1894, at 11 o'clock at the same place.

NEW YORK, *January 3d*, 1894—11 o'clock.

Met pursuant to adjournment.
Present: Counsel as before.

HENRY F. NEWBURY, being further cross-examined, says:

48 X Q. Have you considered the operation of Nordenfelt No. 7195 sufficiently to explain the position of the bolt therein at the time when it is said to lock the withdrawing arm and the lever together; and, if so, will you describe that, referring to Fig. 4?

A. I believe I do, and I have already described it in detail, but not using the designating characters found in the patent. This description will be found in my answer to X Q. 46.

205 I will again describe the operation, using designating characters used in said Nordenfelt patent, and with special reference to Fig. 4, as desired by the present question. This Nordenfelt patent states that Fig. 4 is a section view of line C D of Fig. 2. Turning to such Fig. 2, it will be seen that the arm k, if the view was made on the line stated, would necessarily be in section, which is not the case in Fig. 4, as most of that arm is shown in full. Referring to the same figure, it will also be seen that the part heretofore termed by me a crank arm attached to the driving shaft is below said section line, and is therein designated as l, and that the pin or stud upon such crank arm is designated as l^2. This crank arm, or part designated as l, has upon it a shoulder l^1, heretofore referred to. The arm designated in said patent as k, has upon it a shoulder k^2, which has also been heretofore referred to in my cross-examination.

The specification of this Nordenfelt British patent 7195, commencing at line 19, page 3, of the typewritten copy of said patent offered in evidence herein by said defendant, says:

"In opening the breech as soon as the lever handle c is moved sufficiently far to disengage the screw-thread f^2, a shoulder l^1 upon a piece l moving with the lever handle, comes against another shoulder k^2 upon the withdrawing arm, and this then commences to turn with the hand lever moving rearwards from the breech of the gun. In this movement, it draws the breech block f out of the gun, the breech block being engaged with the disengaging arm in

the manner already described. In this way, the breech block is landed upon the tray or support *i*, and as soon as this is the case, the tray or support also commences to move around with the lever handle carrying the breech block to the rear, and at the same time conveying it to one side, so as to leave the breech opening unobstructed."

Now, turning to Fig. 4 of this Nordenfelt patent it will be observed the two shoulders l^1 and k^2 are arranged in the same circle of movement, and also that at the time the breech block is stated to have been given a partial rotation to unlock it that such two shoulders are abutting against one another, and that, by reason of such abutment, the breech block is to be withdrawn upon the tray from the breech of the gun. It will also be observed that the stud l^2 upon this part *l* has been brought into connection with the slot heretofore named, and, consequently, the said shoulder l^1 has
206 moved as far in its circle of revolution as has the stud or roller; that is, each has moved the same number of degrees of the arc of a circle.

This said Nordenfelt patent, further on in the specification, attempts to describe how this sliding block is to get behind this shoulder l^1 before such shoulder has contacted or abutted with the shoulder k^2. The movement of this so-called bolt or sliding block in its way is such that it moves tangentially relatively to the part bearing the shoulder l^1, and this tangential line of movement of such block is such relatively to the circle described by the movement of the should- l^1 that at the time the stud or roller upon the crank arm *l* has engaged with the slot in the sliding block or so-called bolt, and moved it as far as it can in that direction, this tangential line of movement of the block is nearly at right angles to a line drawn through the centre of driving shaft and crank pin; hence, the block readily moves with the crank pin when the latter is moved in the opposite direction.

If it should be assumed that there is a chance for this so-called sliding block or so-called bolt to move in behind the shoulder l^1 in the sense that it is to move behind it in a direction in which the shoulder moves at this time, and that there is a rearward abutting surface to this shoulder l^1 to permit of this action, which the drawings do not show, or the specifications describe, then the said sliding block or so-called bolt would not get behind the shoulder l^1 until the should- l^1 had fully contacted or abutted with the shoulder k^2, and such an operation, as I understand the same, would be entirely useless for any purpose of locking the arm *k* and crank arm *l* together for the return movement, for the simple reason that upon the instant that force or power was applied to the said lever handle *c* to attempt to return the tray and breech block to the gun, it would first act upon the opposite side of the slot in the sliding block *m*, or so-called bolt, and move it backward out of the way of said shoulder l^1, and from behind said shoulder, assuming, of course, as before explained, that it could so get behind it, which fact is not set forth in the said Nordenfelt patent.

The result of the first application of force or power to this handle

c in the opposite direction, as above stated, would remove the said block m, or so-called bolt, out of the way, and leave no means whatever by which the breech block and carrier could be returned to the gun, except by hand, as heretofore explained, and as
207 stated in the directions attached to the model of this mechanism, which has been offered in evidence herein on behalf of defendant.

I believe the above explains in detail the operation of the parts, as I understand them, as the same are shown and described in the said Nordenfelt British patent No. 7195 of 1887, and as the same are specifically shown in Fig. 4 of the patent, as well as upon the assumption herein made regarding the said shoulder l^1.

As I remember the construction of this model of what is shown in the said Nordenfelt British patent and offered in evidence herein, it is made so that this sliding block m or so-called bolt contacted with the sleeve or socket of the part upon which the shoulder l^1 is constructed, but I did not take this model to pieces so as to get every detail of its construction, and therefore cannot say positively as to just what this piece m did contact with when it was moved by the crank arm when withdrawing the breech block from the gun. I did observe, however, that this block m, or so-called bolt, was free to move, as I have described it, upon attempting to operate the said model at the office of defendant's counsel as before explained. That is upon attempting to return the breech block and carrier to the gun this block m, or so-called bolt, was free to move, except for the friction between it and the ways in which it moved, and there was no efficient locking action of the so-called bolt or sliding block m.

49 X Q. Referring to Fig. 4 again, and calling attention to shoulder k^2 and l^1, I ask whether the result of the revolution of the crank arm is not to cause the bolt to fit in immediately behind the shoulder piece, whose front is l^1, whilst, in closing, that stress is upon a shoulder indicated in the figure by a line passing as part of a radius from the centre of the axis to the right end of the curved interior edge of the bolt.

A. The line referred to in said Fig. 4 is a line which, as I read the drawings, marks a portion of the socket or sleeve of the arm k, and it does not indicate any portion of the construction of the part l^1 or of the crank arm l, which is provided with the shoulder or projection l^1. If there is any such construction of the part l with its shoulder or projection l^1, as is assumed in the question, the drawing is entirely silent on this point, and it would be the same as now shown without any such construction as is assumed in the question, and also it
208 would be as now indicated if the construction was as assumed in the question, therefore the drawing is entirely silent as to what the construction of the part- l and l^1 is at that point.

Assuming for the moment that the construction of the parts l and l^1 is as assumed in the question, and that the said shoulder or projection l^1 extends from the point where such indicating characters are placed to the line referred to at the right of the curved portion of this so-called bolt or sliding piece, then this so-called bolt or

sliding piece *m* would be brought into contact with the sleeve or socket portion of the said crank arm *l*, which sleeve or socket portion in said Fig. 4 is shown in cross-section, and has upon it the designating character *l*, at the time that the shoulder or projection designated as l^1 contacts or abuts with the shoulder k^2, at which time it will be remembered the unlocking of the breech block from the breech of the gun is finished, and the breech block is ready to be withdrawn from the breech. At the completion of finishing of the unlocking of the breech block from the breech the shoulders or projections k^2 and l^1 are in contact or abutting against one another, and the said sliding block *m*, or so-called bolt, is at the extreme limit of its movement toward the driving shaft, and this condition of affairs continues until the breech block is withdrawn from the gun upon the breech-block carrier or tray, and the two are swung aside.

From this it will be seen under the assumption just made that the revolution of the crank arm *l* in a direction to unlock the breech block from the breech is to cause this sliding piece *m* or so-called bolt to move in behind the shoulder piece or connection, which is assumed to be present, but that, immediately upon attempting to return the breech block and carrier to the gun the revolution of this crank arm in an opposite direction for this purpose, immediately, upon the first application of force or power to it, begins to act upon such sliding piece *m* or so-called bolt, and as a result removes such piece or bolt from behind such assumed shoulder, so that there is no stress, to speak of, upon the shoulder referred to in the question, and this sliding piece or block *m* is inoperative to lock the crank arm *l* and arm *k* together, so that the breech block may be returned to its place in the breech by the application of power to said crank arm *l*.

HENRY F. NEWBURY.

209 & 210 RAPHAEL NETTER, sworn and examined as a witness for the complainant-, testified as follows:

1 Q. Where do you reside?

A. Brooklyn.

2 Q. Please state your age and occupation.

A. Thirty-three; draughtsman.

3 Q. I show you the drawing which was mentioned in the testimony of Mr. Newbury, and offered in evidence as Complainants' Exhibit Development Drawing of Seabury's Sketches, and ask if this was made by you?

A. It was.

4 Q. From what did you make it?

A. I made it from Mr. Seabury's sketches submitted to me by Mr. Newbury, and part of the deposition of Mr. Seabury relating to these sketches read to me by Mr. Newbury.

5 Q. Are these papers which I show you, and which are marked Complainants' Exhibit A^2 and Complainants' Exhibit A^3, the sketches to which you refer?

A. Yes, they are.

6 Q. Were these sketches and the information conveyed by the reading of Mr. Seabury's deposition in this cause the only guides you had except your own knowledge and skill as an expert draughtsman, to enable you to make these drawings?

A. They were, absolutely.

RAPHAEL NETTER.

I, William E. Zabriskie, a notary public in and for the city and county of New York, do hereby certify to the court that the foregoing depositions of J. Wall Wilson, Edward H. Litchfield, Henry F. Newbury and Raphael Netter were duly taken before me at the city of New York, by stipulation and consent of the solicitors for the respective parties.

New York, January 30th, 1894.

WM. E. ZABRISKIE,
[L. S.] *Notary Public* (1), *N. Y. Co.*

211 In the Circuit Court of the United States for the District of Maryland. In Equity.

JAMES B. M. GROSVENOR *et al.*, Complainants,
vs.
ROBERT B. DASHIELL, Defendant.

Depositions on behalf of defendant, taken by stipulation at Washington, D. C., February 23, 1893.

WASHINGTON, D. C., *February* 23, 1893—10 o'clock a. m.

Met pursuant to agreement.

Present on behalf of the defendant, S. F. Phillips, Esq.

Present on behalf of the complainants, William G. Wilson, Esq.

Whereupon, EDWARD T. TIPPETT, a witness of lawful age, called by and on behalf of the defendant, having been first duly sworn, is examined.

By Mr. PHILLIPS:

Q. State what is your business.

A. My business at present is chief draughtsman, Ordnance Department, navy yard.

212 Q. Stationed where?

A. At the Ordnance Department, navy yard, Washington, D. C.

Q. How long have you been there?

A. I have been in the navy yard since about 1863; I have not been chief draughtsman that long; I have been chief draughtsman about five years.

Q. As chief draughtsman, what is your business?

A. My business is to oversee all drawings that come to me, and to produce designs from the ideas presented by different officers of

the Government, and also a great many of my own designs, and to take charge of drawings.

Q. In regard to ordnance?

A. Yes, sir.

Q. In the way of your official business, have you been called upon recently to see any blue prints of drawings connected with the Seabury breech-block device?

A. Yes, sir.

Q. When?

A. Twice I have been called upon; the first time was about six months ago; I cannot give the precise date, but I think it was about six months ago. Three blue prints were sent up to me, and I am pretty certain that those are the ones (referring to three blue prints marked Exhibit W. H. S. No. 2). I remember distinctly of there being three blue prints. They came up to me, and I was not told what was to be done with them at the time, and I put them in a drawer that I have for miscellaneous breech drawings.

Q. What did you do with them at last?

A. Within, say five or six days, or probably a week, I can't tell exactly how long, I was called upon to present those drawings, and I sent them to the office.

Q. What office?

A. To the clerk's office; downstairs below my office. From there they were sent to the pattern shop, I believe, to have a model made, the drawings being a little incomplete, and could not be understood very well by the different workmen, and in order to facilitate
213 business I sent a man down there to take sketches of the different parts, to separate them, to put them more in detail than what those drawings showed, for the purpose of facilitating the work.

Q. Did you open the blue prints when they were brought to you?

A. They never came back to me after they were sent to the office.

Q. When they were sent to you, in what condition were they as to marks?

A. They were in good condition; they appeared to be fresh blue prints. I only looked at them with a passing glance.

Q. Had they been used?

A. No, sir; I think not. They did not have the appearance of having been used at all.

Q. Were there marks of dividers upon them?

A. No, sir; there were no marks of dividers upon them at that time.

Q. Were there any marks of wear and tear?

A. No, sir.

Q. They were in perfect good order?

A. They were in good order; yes, sir.

Q. You say you did not see them afterwards?

A. No, sir; this is the first time I have seen them since they left me.

Cross-examination.

By Mr. WILSON:

Q. Did you have anything to do with preparing additional sketches any farther than to direct them?

A. I did not direct them at all. I sent a man down to the shop to make rough pencil sketches to assist the workmen. That was not done in my office at all.

Q. Did you say that they were unable to understand the mechanism?

A. I understood so; that they could not pick them apart, and I sent a man down there to do it.

214 Q. Who were the men who could not understand it?

A. I cannot tell. Mr. Wilson, the foreman of the machine shop, asked me to do it; I did it without orders from the office in any way at all; I went on my own responsibility. I sent a man down there for the purpose of making those sketches in order to facilitate the work.

Q. Were the men who could not understand these drawings the men whose business it was to understand drawings?

A. Men in the shop are not supposed to take a general drawing and pick it to pieces and take the different parts out without figures on it. We have plenty of good workmen who would not undertake to do that.

Q. Then it was nothing remarkable that additional aid was required to work out the details?

A. No, sir; not at all.

Q. Did you give the directions about making the model, or was that under somebody else's instructions?

A. I did not; that came under the foreman of the pattern shop.

Q. When these drawings first reached you did you do anything more than to open them to see what they were?

A. That is all; and then I put them together and rolled them up.

Q. You did not examine them critically?

A. I did not examine them very strictly at all.

Q. What makes you confident that they were perfectly fresh at that time, if you merely glanced at them, as you say?

A. I did not see any marks on them. I am perfectly familiar with other blue prints; make thousands of them every week or so.

Q. How is it that you happen to recall this one as being fresh?

A. I know when it came to me it was perfectly fresh; it had not the appearance of having been used before.

Q. Is there anything that impresses that fact on your mind?

215 A. There is nothing impresses that on my mind except the condition of the drawings; I saw no marks on them such as are on them now. The drawings now show that they have been used; they are mutilated.

Q. You say that you receive thousands of them. Now I want to ask you how it is that you are able to recall this particular one out of thousands as being fresh?

A. I am perfectly familiar with fresh blue prints, and can tell when they have been used.

Q. You do not answer my question. You say you have received thousands of blue prints?

A. I say we make them in our office.

Q. And I understand you that you received them, too?

A. Yes, sir.

Q. In very large numbers?

A. Yes, sir; in large numbers, from all departments.

Q. Then I want to know how it is that out of these large numbers you are able to say that this particular one was fresh?

A. They always come to me fresh as a general thing. I am positive that that drawing was a fresh blue print; I feel satisfied that it was, although it may have been used without mutilation at all.

Q. You did not examine it to see whether there were any pinholes in it?

A. No, sir, I did not; but I did not see any.

Q. Have you looked at more than this sheet?

A. I looked at all three of the sheets.

Q. You remember that distinctly?

A. I remember them.

Q. In making a single model in your department do the blue prints show as much mutilation as these?

A. A great deal more. We have to use them every day or so, especially in the machine shop, and they have to be renewed, because the workmen could not work on them unless they were.

Q. When was any work first done in your office upon drawings of the Dashiell mechanism?

216 A. I cannot recall the date at all. Work on the Dashiell mechanism was commenced two and three years ago, before we went to our new office.

Q. When did you go to your new office?

A. About two years ago.

Q. Give me the date, if you can.

A. It was in July; I believe last July two years ago.

Q. July of 1890?

A. I think it was, sir; it was in July of 1890, I think; I think that is the date.

Q. How long before that had your office worked on the Dashiell mechanism?

A. It was near about that time.

Q. A little before you moved?

A. Yes, sir; I think so.

Q. Was that work done under your supervision?

A. Yes, sir; a good deal of it.

Q. What was the first work of that kind that you recall there?

A. We got up two or three different kinds of breech-making mechanism for Dashiell. This last design, I think, was commenced just before we went over to the new office, two years ago, after the flood; we had fire and flood down there.

Q. When you say you got up two or three different kinds of

breech-making mechanism for Dashiell, do you mean working drawings?

A. Working drawings; yes, sir.

Q. What were they taken from?

A. They were taken from sketches of Mr. Dashiell.

Q. And when you say sketches, what kind of drawings do you mean?

A. They were rough, general ideas, drawn out by the inventor or designer, so that we could get up working drawings from them, put them in working shape.

Q. You do not mean mechanical drawings, such as blue prints are made from?

A. Not such as those, but they were small sketches.

217 Q. You do not mean on transparent cloth, so that they could be printed from?

A. No, sir; they were not that kind; I do not know where the sketches were taken from which blue prints were made at the bureau.

Q. Then if I understand you rightly, Dashiell furnished three different forms of ideas before you got the one that was practically carried out?

A. Yes, sir; his original idea was embodied in a model also; it was nothing like that; it was different altogether.

Q. The first one that was put in practice was nothing like the original you say?

A. Nothing like this.

Q. When you say "this," to what do you refer?

A. I mean the design here present. This looks like Dashiell's design, the design we are carrying out now, near about. That is the design we call the Dashiell design at present.

The small model here referred to by the witness was marked "A" for identification.

Q. Then this design represents practically the third one of the three you were speaking of, does it?

A. I should say it did; yes, sir.

Q. Substantially the same?

A. Yes, sir.

Q. And substantially the same with the design that has been manufactured at the navy yard?

A. Yes, sir.

Q. Substantially similar to the so-called Dashiell breech-making mechanism?

A. Yes, sir.

Q. I show you another model, which we will have marked "B" for identification, and ask you, if that is one of the prior designs of Dashiell to which you refer, if you recognize it in any way?

A. I do not recognize it at all.

218 Q. You do not recognize that as conforming to an earlier one of the three Dashiell designs of which you have been speaking?

A. No, sir.

Q. Are there preserved in your office drawings of those two earlier designs of Dashiell?

A. Yes, sir.

Q. In what shape are his original sketches?

A. I think I can furnish his original sketches, too; I am pretty certain of that. I never made any drawings like Exhibit B at all. I have no recollection of making any drawings like that, and I am pretty certain I never made any.

Q. Would you consider that the first drawings that you made as being nearer to Exhibit A than Exhibit B is, to represent some state of development between the two, or would this Exhibit B suggest it at all?

A. I do not think that model (B) would suggest anything at all except the interrupted screw.

Q. The interrupted screw was an old feature?

A. Yes, sir; it was old.

Q. And the purpose of the Dashiell mechanism was merely to handle the plug by a mechanical contrivance, was it not?

A. Yes, sir.

Q. Did you have to do with the making of a model of the Dashiell mechanism?

A. No, sir.

Q. How long a time elapsed between your office first taking up Dashiell's first drawing and your office making working drawings of the mechanism that actually was constructed?

A. From the first Dashiell work, do you mean?

Q. Yes.

A. I think it was about two years and a half.

Q. I think you do not quite understand me. I mean from the first time that you began working on any of Dashiell's drawings or ideas until you first made actual working drawings for work that was actually done. In other words, how soon after you began on any of Dashiell's drawings did you actually begin constructing something on Dashiell's ideas. Was it six months?

219

A. It was longer than that. We made a kind of model gun down there with a rack to run the plug out, and at the same time to rotate it—not to run out and rotate at the same time, but to do both things, I mean; the teeth were at an angle of 45 degrees. That was the first one. We put it on a large gun; I forget now what size; I think it was a nine-inch Dahlgren gun that we cut the breech off of, and we made working drawings of that in the first place, and made a working model of full size, which is there in the shop.

Q. Is it there now?

A. I think it is there now; but it is nothing like any of these, so far as I know. In fact, it is somewhat similar to the designs that are to become, I might say, the standard we are using for the large guns.

Q. I am speaking now with reference to the designs which finally ripened into this form (A).

A. I think the designs that ripened into that form have been very

little modified from the time that it was commenced, which was probably about two years and a half ago.

Q. Was the form shown by Exhibit A preceded by other forms in trying to accomplish the same purpose that Dashiell had in view?

A. Yes, sir; it was.

Q. Those are the two anterior ones you have spoken of, are they?

A. Yes, sir; this one (B) was similar to that that he had down there; but he never made any drawings for it. That was the second one of the two; the other was the one running the plug out longitudinally, and then rotating the teeth at an angle of 45 degrees—a different design altogether. That was one of the first attempts, and then something of that kind (B) he had a model of and brought down there, and also a sketch; I cannot tell whether that is
220 actually the thing or not; I know it had a wheel similar to that. If I had done any work with it I would have been more familiar with it.

Q. From the time that you knew Dashiell was presenting your office with drawings of rapid-fire mechanism until you actually settled upon the present form of mechanism, how long a time elapsed?

A. About two years or two and a half.

Q. No; I mean before you settled on the present form.

A. I do not think it was more than four or five or six months.

Q. When did you begin making a gun on the present form?

A. As near as my recollection can go back, as I said before, it was just before we left our old office, which was in July, 1890.

Q. You began making one in this form?

A. Yes, sir.

Q. You do not mean actually, but simply the drawings; and you began to make mechanism to put on a real gun?

A. Yes, sir.

Q. That was some time in the summer of 1890.

A. I know it was a short time before we moved.

Q. Were any drawings made in your office for Dashiell's application for a patent?

A. No, sir; not that I know of.

Q. You are not acquainted with anything of that sort?

A. No, sir; nothing of that kind.

Redirect examination.

By Mr. PHILLIPS:

Q. You spoke of three different forms in which Mr. Dashiell presented his invention, or whatever you call it was one of those Exhibit "B?"

A. One of them was similar to that. As I said before, I had nothing to do with making the drawings of that thing, and consequently I am not so familiar with that as I am with this
221 other. This is a constant thing with me every day, and I am familiar with it. I never made any drawings of that other; that is, I do not remember making any.

(NOTE.—The foregoing deposition was taken at the Sun building, on F street, in the city of Washington; the remainder of the deposition of this witness was taken at the Washington navy yard, all parties being represented as before.)

By Mr. WILSON:

Q. The drawing now shown you is from the files of your office; is it?

A. Yes, sir.

Q. And this breech mechanism for a four-inch rapid-firing gun is signed by Ensign Dashiell; is it?

A. Yes, sir.

Q. There appears just before the name these words: "Modified from bureau's blue print No. 1726, approved October 18, 1890." What does that wording mean?

A. This drawing was taken from one of those sketches I spoke of before.

Q. And the words "approved October 18, 1890," mean what?

A. Our drawings were approved after the print came down.

Q. What date does that indicate—the date when this drawing was finally put into its present shape?

A. No; that date, October 18, 1890, is the date of the approval of the bureau's blue print, No. 1726.

Q. Then the wording below, "Ordnance office, Washington navy yard, November 25, 1890," is the date when the drawing itself was adopted, is it?

A. That is the date when the working drawings were gotten up.

Q. And the signature "Charles O'Neil, commander and inspector of ordnance," is put on for what purpose?

A. He is the inspector and commander of ordnance, and he had charge of this work and has to go on the drawings before the foreman of the shop will take hold of the work.

Q. And that is practically the authority to begin work on this design?

A. Yes, sir.

222 Q. And that relates to the date, November 25, 1890?

A. Yes, sir.

Q. That would be just about the time when actual work was first begun in constructing this mechanism in its present form and applying it to a real gun?

A. Yes, sir; that is my understanding of it. That is about the time I told you. I told you it could not have been more than four or five months after that it was applied to the gun.

Q. And the other drawings, of which you spoke this morning, were before this date, but you do not find the original sketches of Dashiell, of which you spoke?

A. No, sir; I have not found them yet. If you would wait awhile, I think I could find them.

EDWARD T. TIPPETT.

Subscribed and sworn to before me this 28th day of February, 1893.

WILLIAM HERBERT SMITH,
Examiner in Chancery.

WILLARD G. CRAWFORD, a witness of lawful age, called by and on behalf of the defendant, having been first duly sworn is examined—

By Mr. PHILLIPS:

Q. What is your position or calling?
A. My position is pattern-maker at the Washington navy yard.
Q. How long have you been there?
A. Since December, 1884.
Q. Do you recognize these blue prints (marked Exhibit W. H. S. No. 2)?
A. Yes, sir; I do.
Q. When did you first see them?
A. Some time about the middle of October, 1892; I cannot give you the exact date.
223 Q. Upon what occasion?
A. The occasion was when the foreman brought the drawings to me and requested me to make a model.
Q. Was your attention particularly called to the blue prints?
A. Yes, sir.
Q. To all three of the sheets?
A. Yes, sir; to all three of the sheets.
Q. In what condition were they as regards the appearance of having been used, marks of use?
A. Apparently they were in good condition; I should judge that they were new sheets.
Q. Was there any marking of pin-holes or dividers?
A. No; as I say, they were in entirely good condition.
Q. By good condition you mean what?
A. Perfect. They were not mutilated in any manner.
Q. How long did you have them under your hands?
A. About two weeks, I should judge; near about two weeks.
Q. Did you have occasion to make pin-holes?
A. Yes, sir; the drawings were not figured properly, and to get the correct radius I stuck pin-holes through the drawings.
Q. And having used them you returned them?
A. I returned them to the foreman of the machine shop; yes, sir.

Cross-examination.

By Mr. WILSON:

Q. Where was it that the drawings were not figured properly?
A. Here (pointing).
Q. Do you mean on the curve or the extractor arm?
A. Yes, sir.

Q. What figure is erroneous there?

A. I did not say the figures were erroneous; to get the correct position of these centres, I had to lay this drawing on a piece of wood and prick it through.

224 Q. You do not mean the drawing was faulty?

A. No, sir.

Q. But only that the measurements you wanted were not indicated?

A. Yes, sir; I wanted to make a like drawing.

Q. Did you have anything more to do with making a model than simply to draw some patterns?

A. I did the work on some of the models.

Q. On this wooden model that is here in the room now (marked C for identification)?

A. Yes, sir.

WILLARD G. CRAWFORD.

Subscribed and sworn to before me this 28th day of February, 1893.

WILLIAM HERBERT SMITH,
Examiner in Chancery.

EDWIN M. BIRRELL, a witness of lawful age, called by and on behalf of the defendant, having been first duly sworn, is examined.

By Mr. PHILLIPS:

Q. What is your position?

A. I am a pattern-maker in the Washington navy yard.

Q. How long have you been there?

A. I have been in the yard ten years, learning the trade, etc.

Q. You have been a pattern-maker how long?

A. I have been a pattern-maker about six years.

Q. Did you ever see these blue prints that are here (W. H. S. No. 2)?

A. Yes, sir; I have seen them before.

Q. How long ago?

A. If I had the stubs of my books, I could give the exact date; but I think it was about the middle of October, 1892.

225 Q. Did you have your attention called to the condition of the blue prints when you first saw them?

A. The general appearance of them was that they were new.

Q. Did you examine them?

A. I went over them in a mechanical way, examining them.

Q. Do you recollect any marks of pin-holes or dividers, or other evidence of their having been used before?

A. No, sir; I did not observe any.

Q. Did you look at them carefully?

A. I do not know about carefully, but I think if they had been there, I would have seen them.

Q. And they were fresh, as you say?

A. Yes, sir; apparently they were new prints.

Q. How long were you employed about them?
A. I suppose running into two weeks.
Q. And some time about the middle of October?
A. Yes, sir; Mr. Crawford and myself had charge of the shop, making a model.
Q. Did you work upon Exhibit "C"?
A. Yes, sir.
Q. That is partly your work; is it?
A. Yes, sir.

Cross-examination.

By Mr. WILSON:

Q. Is Exhibit C made on the same dimensions and proportions as indicated in these blue prints?
A. Yes, sir; as near as possible.
Q. What do you mean by "as near as possible"? Do you mean as near as it was possible to make it in wood?
A. Yes, sir; I might say.
Q. As near as it was physically possible to make it in wood?
A. Yes, sir; to make it in wood, so that it would work.
Q. And this was the best result you could get from your efforts in wood, was it?
226 A. If we had given more time possibly we could have done better; but it was understood that we were to hurry.
Q. Who gave you directions to make it?
A. Mr. Wilson, the foreman.
Q. Foreman of what?
A. Foreman of the machine shop?
Q. These drawings were not so fresh as to indicate that nobody had ever looked at them before, were they?
A. No, sir; it is hard to tell whether anybody had ever looked at them or not.
Q. You mean they were not defaced?
A. Yes, sir; they were not defaced.

EDWIN M. BIRRELL.

Subscribed and sworn to before me this 28th day of February, 1893.

WILLIAM HERBERT SMITH,
Examiner in Chancery.

The taking of these depositions was thereupon adjourned, subject to notice.

227 WASHINGTON, D. C., *March* 24, 1893.

The parties met pursuant to notice, at 10 o'clock a. m., at the office of solicitor for the defendant, in the Sun building.

Present: Mr. William G. Wilson, solicitor for the complainants; Mr. Samuel F. Phillips, solicitor for the defendant.

The following depositions were taken in my presence, under stipulation of solicitors for the respective parties.

WM. HERBERT SMITH,
Examiner in Chancery.

ROBERT BROOKE DASHIELL, the defendant, having been first duly sworn, testified as follows:

By Mr. PHILLIPS:

Q. What is your age, and where are you employed?

A. I am thirty-two and three-quarters years old, and am an ensign in the United States Navy. I am at present on duty as inspector of ordnance in charge of the naval proving ground at Indian Head, Maryland.

Q. How long have you been at Indian Head?

A. I took charge of the station at Indian Head on the first of September, 1890. My orders from the Secretary of the Navy authorizing me to discharge the duties of inspector of ordnance were dated about the 10th of January, 1891, to the best of my recollection.

Q. Previously you had been where?

A. Previously I had been on duty as assistant at the naval proving ground at Annapolis; from the middle of April, 1888, until my detachment, June 20, 1890.

Q. What relation have you to this suit?

A. I suppose the technical name is "defendant." I am the defendant in this suit.

Q. What knowledge have you, if any, and where did that knowledge originate, about the Seabury patent, spoken of in the bill of complaint?

228 A. I first saw the plans, I may call them, or plates of the Seabury mechanism, with the principal matter of his claims in that patent as published in the weekly publication of patents.

Q. Is it the Official Gazette?

A. I think that is the title. It is a book about a quarter of an inch thick, and published weekly. I will call it the Official Gazette of the Patent Office. I saw that publication in the library of St. John's college, Annapolis, Maryland, somewhere either in May or June, 1890; it is impossible for me to say when.

Q. Do you know William M. Folger, late chief of the Bureau of Ordnance?

A. I do.

Q. Have you had any connection with Commodore Folger in relation to the Seabury patent; and, if so, what?

A. The first connection that I had with Commodore Folger in relation to the Seabury patent was in the summer of 1890, probably in August, in the course of a conversation in regard to my breech mechanism, which I then presented for his consideration. I do not wish to be understood as saying that I presented a model at that time, or anything of that kind; it was a discussion of the principles. Commodore Folger remarked to me: "You have taken care

to see that this does not interfere in any way with Seabury's invention."

Q. What relation, if any, did you have with Commodore Folger at that time?

A. I was what is known as one of Commodore Folger's assistants in ordnance; that is, I was on duty under the chief of the Bureau of Ordnance, who was Commodore Folger.

Q. Had you been projecting anything in relation to breech mechanism in rapid-fire cannon at that time?

A. I had.

Q. For how long?

A. I began to devise a breech mechanism for rapid-fire cannon on the slotted-screw system in the summer and fall of 1889.
229 Of course I had thought a good deal on the subject before that.

Q. When did you communicate to Commodore Folger the fact that you were concerning yourself in breech-loading ordnance?

A. In the summer of 1889.

Q. Did you talk freely with him about those matters?

A. As freely as a conversation in a street car in Washington would permit. I told him that I had a design.

Q. That was December, 1889?

A. Yes, sir.

Q. And thereafter did you talk with him freely about your designs?

A. I did not. I was not intimately associated with Commodore Folger until June, 1890.

Q. Was there at any time an agreement between you and Commodore Folger, or a suggestion on his part, that you would or should avoid the effect of Mr. Seabury's patent?

A. There was not.

Q. Your conversation with Commodore Folger with respect to Seabury's patent was directed to what end?

A. That conversation, which I said was in the latter part of the summer, was to the end that Commodore Folger should feel assured that my design was original in its details, and that I had no fear whatever of infringing any design of Lieutenant Seabury, with which, at the time, I was thoroughly familiar.

Q. Was that conversation with Commodore Folger about any other design than those of Seabury?

A. Yes.

Q. Whose?

A. Canet's, Farcot's, Hotchkiss', Nordenfelt's, Baronowski's, Fletcher's and Weller's.

Q. You endeavored to inform yourself up to that time as to what had been done theretofore in the art?

A. At that time and at all times it was my business to do so; not specially at that time, for that was in the summer, and
230 I had informed myself—had been informing myself for several years—on those very points.

Q. Were the details, operation and methods of these persons that you have mentioned known to you?

A. Such patents as had been gotten out by the persons mentioned were generally known to me. Others were known to me, I should say, in a general way; but I named persons who had no patents—merely designs.

Q. Did Commodore Folger say anything to you, directly or indirectly, about blue prints that had been placed in his charge by Lieutenant Seabury?

A. He did not. The only mention that Commodore Folger ever made to me of any blue prints in connection with Seabury was on an occasion in the spring of 1891, in which he said that Seabury had asked him for blue prints of my mechanism, and he had declined to send them to him.

Q. I show you blue prints of Lieutenant Seabury's construction that have been heretofore placed in evidence in this case—Exhibit W. H. S. No. 2—and ask whether you have ever seen them before, and when first.

A. This is the first time that I have ever seen these blue prints.

Q. Was anything ever indirectly communicated to you in connection with the blue prints by anybody in the department?

A. While I have been passing through the offices of the bureau I have heard conversation among the officers that Seabury had presented drawings of his mechanism, and I presume these blue prints were referred to, as blue prints are the usual medium of information in such proceedings.

Q. Were you ever shown, directly or indirectly, any drawings or representations of the details of Lieutenant Seabury's mechanism?

A. I have never seen any drawings of his mechanism, except those which appeared in evidence in New York on the 21st of October last, at the first taking of depositions in this case.

231 Q. What other knowledge, if any, did you have in regard to Lieutenant Seabury's claimed invention previously to the time of your taking out your patent?

A. To inform myself better of what Seabury had invented about a week after I first saw the Patent Office Official Gazette, I bought a copy of a patent—I do not remember the number; it was the patent in question, though, and was the one which I wanted to study particularly.

Q. Did you study it?

A. I did.

Q. You were thoroughly informed, so far as you could be, of Mr. Seabury's mechanism at the time you got out your patent, or applied for your patent?

A. Yes, I could have made his mechanism from my knowledge of it.

Q. From the information you received from the Patent Office?

A. Yes.

Q. Was there any communication between you and Commodore Folger as to the manner in which you might evade Mr. Seabury's construction?

A. There was not.

Q. Did Commodore Folger ever communicate to you any ideas connected with your invention?

A. He never did.

Q. Was your invention simply a matter of your own device and contrivance?

A. So far as the details of its construction and certain principles which were new in my device are concerned it was entirely my own; all the principles of it were not mine.

Q. I show you two models of your breech-loading mechanism heretofore filed as exhibits in the case, which for convenience will be known as "X" and "Y;" the other not yet offered to be known as "Z," and in reference to them ask you to state the manner in which you progressed during the time that you were maturing them.

232 A. I first thought of turning the plug and pulling it out in the summer or fall of 1889. The method of doing this was to turn the plug by means of a pinion, fitted with teeth gearing with teeth on the face plate of the breech block, the pinion to be revolved by gearing with another pinion in a horizontal plane, to which latter pinion was to be securely attached the hand lever, which would also necessarily move in a horizontal plane. To withdraw the plug on the tray in previous general use, I conceived the idea of a bell-crank lever, which is practically an arm with an elbow. In the elbow I intended to pivot what I have previously called the second pinion; that is, the pinion which is rigid with the actuating lever. The use of this bell-crank lever allows a force to pull back the breech block at the same time that the plug is being turned for unlocking. So that the force for withdrawal is just as powerful while the plug is in the gun as when it first begins to come out after being unlocked. The advantage of this is that all friction, or nearly all, in the screw-threads while unlocking is eliminated by the backward pull of the bell-crank lever, which is also called the translating arm, as it gives what artillerists call the translation movement to the breech lock.

So far, the design was simple and easy, and half an hour of thought settled the whole matter in getting the plug out of the gun; more difficult was the problem of returning the plug to the gun; for, of course, after my experience with guns, I could not resort to anything but what is known as positive motion, all springs, catches, etc., having up to that date, and always, so far as I know, led to complete failure of the design both practically and commercially. Finally, after the lapse of a month or so, probably, (for I had so much other work on hand that I gave but little time, and that only when off duty, to the device under discussion), I devised a cam groove, if I may so call it, embodying a right-angle motion to correspond with the forces of translation and rotation of the breech block; which forces are approximately at right angles. To run in this
233 cam groove, which for convenience I put out of sight under the tray, I arranged a small stop on the actuating lever. This stop was placed in such position that it took against the pin which formed the pivot of the translating arm at such time as the

plug was in the unlocked position, whether this plug was in the gun or on the tray. The whole construction is shown in the model, Exhibit X. For the practical ends necessary, one part of the pinion first named is fitted with a plain tooth rack to engage a similar rack on the breech block and face plate, the lower sector of the same pinion being connected with the second pinion by bevel gearing. To retain the plug in position on the tray when withdrawn, as well as to hold the tray firmly to the breech of the gun while the plug is being withdrawn upon it, what is known as the ordinary double-tooth service latch, well known in the navy, was employed.

This whole construction, as described, gradually formed itself in my mind with the aid of rough sketches in pencil, all my own, personally used, probably never existing more than a day, until at last I felt so sure that it would work, that I determined to have a model made. I was very busy at the time with ordnance duty, having three or four other devices on hand which, I confess, I regarded at the time as of a great deal more importance than that for R. F. guns, and I did not hurry the model at all; in fact, I put it off purposely until I could pay a man in Baltimore for casting the tray and cutting the bevel-gear wheels. So that the model was not completed until the last part of August, 1890. I finished it myself, late one Saturday night, and was much pleased to see that it worked. That completes model X. The model was designed to represent a miniature six-inch breech-loading rifle of the navy pattern, about one-eighth full size, the breech block having right-hand screw-thread, and fitted with the De Bange gas check; my object being to show that this mechanism, as shown in the model, could be fitted to the naval gun standard at that time. All this relates to model X.

234 Q. How long afterward was it that you substituted for model X model Y?

A. The principles and details shown in the construction exhibited by model Y were arranged the first week in September, 1890.

Q. Were the cannon made at the navy yard in use by you constructed upon the principle of model Y?

A. No; all rapid-fire cannon of four-inch, five-inch and six-inch calibers are constructed on the principles shown in model Y; but there have been manufactured what are termed guns with ordinary breech mechanism which do not embody the principles of model Y.

Q. These cannon of which you speak, other than those constructed upon the principle of model Y, are constructed upon what principle, so far as breech-loading mechanism is concerned?

A. They are constructed to open by three separate motions—what is known as the old type.

Q. As I understand, then, the cannon were manufactured at the navy yard which have been in use by you as inspector?

A. Not in use by me, but submitted to me for testing. I suppose I use them.

Q. Tested by you?

A. Yes.

Q. Either—the old gun with three movements, or so far as they

are cannon which perform the three movements by one movement—are constructed according to model Y and the others?

A. Yes; except one experimental gun of an entirely different system of breech closure, namely, the Driggs-Schroeder.

Q. When you commenced your experiments you were aware, as you have said, of Canet's, Seabury's and other like systems. What was your purpose in devising another breech-opening cannon? What did you set before yourself as desirable?

235 A. First, to get an American invention; second, to get a mechanism that was as short to the rear as possible; third, one that could be made cheaply; fourth, one that was strong, and at the same time had such power in its mechanical details as to be able to pull out a fired cartridge case; and then, lastly, to get one that could be made at the Washington navy yard, where there are no special tools for making such curiously shaped grooves and cams, etc., as are shown in the Canet and other devices.

Q. Which of these reasons, if any, apply to the Seabury mechanism; he got an American patent?

A. Seabury's mechanism is the invention of a good mechanic, but one without much experience in practical ordnance matters, and I felt convinced that it could not be a success in service.

Q. I show you a model marked Z, said to be a model of the Seabury mechanism, and ask whether you recognize that as illustrating the principles of the patent which was before you at the time that you were engaged in developing your ideas.

A. That model seems to have been made from the patent drawings in question; and, so far as I can see, it shows all the principles as set forth by those drawings.

Q. In what respects did you purpose to vary from the model in the interest of breech-loading ordnance?

Mr. WILSON: You refer to this model Z?

Mr. PHILLIPS: Yes.

Mr. WILSON: I object to the question as incompetent and immaterial.

The WITNESS: I must say that I did not purpose to vary from the model, as I had already my plans completed when I saw the Seabury patent.

By Mr. PHILLIPS:

Q. The Seabury patent was before you previously to your application for a patent for yourself?

A. Yes, it was.

Q. It failed to satisfy some view which you had of excellence in that respect?

236 Mr. WILSON: The same objection.

The WITNESS: Yes, it did.

By Mr. PHILLIPS:

Q. In what respect?

Mr. WILSON: The same objection.

The WITNESS: First, the Seabury mechanism depends for the action of nearly all its parts on the revolution of a vertical driving shaft. In unlocking the plug and withdrawing it he is compelled by this arrangement of the driving shaft to use a crank arm for the unlocking part, which comes to what is called a dead centre when the plug is completely unlocked. The effective distance traveled by the crank pin during this motion is approximately equal to the radius of the crank. Could this unlocking rack have been driven by a pinion, the distance traveled by that rack or by any tooth on that pinion would be equal to one-fourth approximately of the circumference of the circle. He has, therefore, lost a certain distance in travel; in other words, his actuating crank or lever must move just that much further to accomplish this result. When the plug is to be withdrawn, after being unlocked, he arranges a stop, rigidly connected with the driving shaft to strike against what he calls his retractor arm, and thus pull the plug out of the tray. The third part of the motion is the swinging of the plug upon this driving shaft as an axis; and from the details of his construction, this driving shaft, being at a considerable distance from the face of the breech, will require a very large arc of revolution to swing the plug clear of the breech opening. To accomplish the revolution of the driving shaft necessary for these three motions, he has been required, by the exigencies of his design, to use a long rack, gearing with a pinion at the lower end of the driving shaft, in order that the swing of the lever arm may not be so great as to carry the operator's hand around under the gun, which would be an impracticable feature in service. In other words, he has to gear up for speed. My experience with guns at the proving ground showed me that unless a mechanism were geared up for power and not for speed, the
237 breech block could never be unlocked, owing to the great expansion of the mutton tallow and asbestos, to say nothing of the gas-check cups of the De Bange gas check. The adjustment of the plug in its unlocked position depends upon the accurate placing of the stop on the retractor shaft, which impinges on the retractor arm or a portion thereof. Such an adjustment is liable to be disarranged by wear or by an improper location of this stop on the driving shaft. Again, in returning the plug from the tray to the gun, he has found it necessary to use what I think he terms a trip-pin stirrup, actuated by a cam and spring principle. This spring catch, which it really is, will operate while the plug is moving along the rear part of the tray, but as the plug approaches its seat in the gun, the cam, or at least the change in direction of certain surfaces which actuate this trip-pin, will cause that part of the pin or catch which locks the retractor arm to the driving shaft to gradually move so that the connection between the retractor arm and driving shaft becomes finally broken at a point near that desired. If all these parts are in accurate adjustment, the plug may be sent fully into its seat. The position of the plug in the gun when it is ready for turning must be within two-hundredths of an

inch of a certain point in order that the screw-threads may engage. This position in the Seabury mechanism is controlled by the adjustment of a small pin in a cam very close to the axis of motion of the parts. Such an adjustment is almost a mechanical impossibility. It may be made to work a few times in a model, but should the principle be actually applied to a gun, it would certainly fail to work, because it is at this very point that a positive and a powerful action is required for the breech block. Beside all this, the large number of parts and general complication would cause me to pass an unfavorable judgment on the Seabury mechanism.

Q. Have you seen Lieutenant Seabury's cannon or his breech mechanism anywhere; and, if so, where and when?

A. I have. I saw a five-inch siege gun fitted with this mechanism at the proving ground at Sandy Hook, New Jersey.

238 Q. On what occasion, and how came you to see it?

A. I was ordered by the Navy Department to proceed to Sandy Hook on or about October 19 or 20, somewhere along there, 1892, for the purpose of giving my experience to the officers of the army stationed there on the subject of firing a smokeless powder which had been developed by naval officers and a naval chemist. After firing in a small gun during the forenoon, the commanding officer directed two of his assistants to fire the same powder in a larger gun, naming the five-inch, as the smaller gun was not adapted to the sample of powder on hand. This five-inch gun I learned in walking from one battery to the other was the Seabury gun.

Q. What was the result of your observation of the Seabury gun at that time? Was it fired?

A. To the best of my recollection I saw the gun fired three times. It operated precisely as I expected it would.

Q. What do you mean by that?

A. After the charge was loaded the gas check in the rear had to be pushed closely home, and then when the breech block was swung to by the gunner's hand on the actuating handle, the plug traveled well and easily along the rear part of the tray, until it came within about three-quarters of an inch of being home in the screw-box. The trip-pin had then disengaged itself; the retractor arm was not in connection with the driving shaft, and the crank connected to the locking rack beginning to move, jammed the plug three-quarters of an inch away from its proper position. By a heavy jerk on the lever handle the plug was partly withdrawn upon the tray, and then by giving it a very quick motion with the lever handle, the plug was jumped, as it is called, over the sticking pin, and was locked properly in place by the continued turning of the lever handle.

Q. Was this the first fire or the third fire that this occurred; what was the fact?

A. To the best of my recollection this was on the first fire
239 that I saw it. In preparing for the second fire, as I recollect it, the plug was moved quickly in and went over the sticking place all right. I have no definite recollection of the third fire; but the gun was opened and closed several times between fires, and

I saw the same phenomenon repeated. I was careful not to touch the gun myself, as I was merely a visitor to the place.

Q. Was this visit made on the occasion that you went to New York to take these depositions?

A. It was that time.

Q. You went from Sandy Hook to New York?

A. Yes; went to New York the next day, and the depositions were taken.

Q. I understood you to say that Commodore Folger was your superior officer?

A. Commodore Folger is at present my senior officer; while he was chief of the Bureau of Ordnance he was my superior officer; before he came into the bureau he was my senior officer.

Cross-examination.

By Mr. WILSON:

Q. What army officers were present on the occasion you have just described, in October, 1892, when you saw the five-inch gun fired at Sandy Hook, being a gun that had the Seabury mechanism attached to it?

A. There were present Captain Heath, who was in command of the station; Lieutenant Peck and Lieutenant Wheeler; all three of them in the Ordnance Department, and Lieutenant Grebble, of the artillery corps.

Q. Was the gun fitted with a De Bange gas check?

A. It was not.

Q. What was used as a gas check?

A. There was used as a gas check a brass cup which resembled a portion of the base of a cartridge case. I do not know whether there were any steel fittings in connection with it or not. My recollection is that it was brass.

Q. Were you aware that that brass cup was fitted with a steel base the full width of the powder cavity—the powder chamber?

A. Yes; I believe it was.

240 Q. Did you observe that it was necessary to drive that home by something independently of the breech mechanism in order to load the gun?

A. In order to load the gun this gas check was carefully entered around the base of the cartridge bag. Then the gunner shoved it hard home with his hand. I do not recollect whether any tool was used in that connection.

Q. Do you recollect whether after the gun was fired it was necessary to remove that cartridge base again by a blow of the ramrod through the muzzle of the gun?

A. It was also necessary to do that.

Q. And did you ascertain the reason of that to be that the steel base of this cartridge case, not being made of properly tempered steel, expanded with the force of the blow of the explosion of the charge, so that it jammed the sides of the gun?

A. It was impossible for me to notice that, because there was no

effort made to get it out in any other way than by a blow through the muzzle.

Q. You are not informed that that was the fact?

A. I was not informed that that was the fact. But it probably was, or they would have used an extractor upon it.

Q. You observed one thing—that the cartridge tended to jam both on entering and withdrawing?

A. It was not observed by me on entering the cartridge. As I said, I could not observe it in withdrawing, as one heavy blow of the rammer knocked it out.

Q. Did you observe that the extractor had been removed from the breech mechanism?

A. I did.

Q. Did you ascertain the cause of that?

A. I did. I was told that the extractor bent so badly and had so little power that it would not extract the cartridge case. That is about the amount of it; it was not in exactly that language.

Q. Who told you that?

A. It was either one of the two officers named—Lieutenant Peck or Lieutenant Wheeler; because being just introduced to
241 them, I could not identify Lieutenant Peck or Lieutenant Wheeler today with certainty.

Q. Were you not informed that the hammering out of this steel cartridge base made it jam so that no extractor could be made strong enough to pull it out?

A. I was not so told.

Q. Before you made application for your own rapid-fire patent, being, as I understood you, substantially as shown by the model Y?

A. Yes.

Q. Were you familiar with the various patents which had been taken out in this country for rapid-fire mechanism?

A. With a good many of them; I cannot say all.

Q. Had you not taken pains to familiarize yourself with all of them?

A. Only in this way: In preparing for this patent application of mine, I went to the division in the Patent Office which embraced breech-loading ordnance, and looked at pictures or plates of every patent that I could find, or that anybody could direct me to. I cannot say that I looked at every one in the Patent Office, of course, but I examined carefully what is called the breech-loading devices for rapid-fire mechanism, or any one which would lead me to suppose might resemble mine and interfere with me in any way.

Q. Did you examine or observe any other patents of Lieutenant Seabury except the one to which you have already referred, being the one named in the bill of complaint?

A. To the best of my recollection that was the only one. It surprised me afterward to learn that he had another one granted him only a month or so after that. I omitted that in my search.

Q. (Exhibiting to witness patent No. 431,214, dated July 1, 1890.) Is that the one to which you refer?

A. This is a copy of the one I omitted in my search.

Q. In your criticism upon the model which has been pro-
242 duced here and marked Z, designed to show the Seabury mechanism in conformity with the patent in suit, would you undertake to say that what seemed to you defects in its adaptation for practical working might not be removed by more or less substantial modifications or changes, without departing from the general principle and combination there shown?

A. I see no detail in that that could be improved to any extent without a radical change in the general method of working the mechanism.

Q. Was the mechanism as fitted to the five-inch gun which you saw at Sandy Hook the same as that shown by model Z?

A. It was not quite the same. Its principles were the same.

Q. Did it more closely resemble the other patent to which you have just referred, No. 431;214?

A. It seemed to; very much like that; it more closely resembled that than it did the other one.

Q. And you wish to be recorded as being of the opinion that that mechanism could not work practically? Is that the fact, or is that the interpretation of your direct testimony?

A. That is the fact, and that is the correct interpretation of my testimony.

Q. At the time that you completed model X, in August, 1890, did you forthwith show it to Commodore Folger?

A. I completed that model Saturday night and showed it to Commodore Folger on the Sunday morning following.

Q. Was any gun ever made with the mechanism shown by model X fitted to it?

A. Not to my knowledge.

Q. Was model X the idea that you had been working on up to that time?

A. Model X was the idea I had been working on up to that time, limited as I was by the object in view. It was not my ideal. I was limited by the object in view and the exigencies of the service, if I may so call it.

Q. Please explain that a little more fully.

243 A. I was designing a rapid-fire mechanism to be fitted to a gun already in the service, so that an entirely new gun would not have to be built to try the mechanism. So soon as I was authorized to design my own gun, or one according to my own ideas, I designed the gun on the principle of model Y, which, with my present lights, is my ideal.

Q. Was not model Y adapted to be fitted to guns already in use?

A. It was not.

Q. For what reason?

A. In the navy we have all guns so far except those designed by myself, provided with a right-handed screw-thread for the breech block. It is also believed by naval ordnance officers that there is more power gained in swinging the body from left to right, and all lever handles are as a rule so fitted to swing—from left to right.

Therefore, model Y could not be adapted to a navy gun, as the mechanism would not allow these two features.

Q. It could, however, have been adapted to the navy guns by foregoing the swing from left to right of the handle and transferring the hinge to the left side of the breech?

A. It could have been.

Q. In other words, merely reversing the design of the mechanism?

A. Yes.

Q. And is not the same power required to return the block and lock it in the gun which is required to unlock the block and remove it from the gun?

A. By no means.

Q. What makes the difference?

A. The extraction of the cartridge case.

Q. The cartridge case is an element only of guns which are fired by means of a trigger and firing pin. Is not that so?

A. Yes; that is generally so.

Q. And model X was not designed for such use?

A. It was not.

244 Q. Then what made it necessary, really, to change your design from that shown by model X to that shown by model Y? Was the desire to produce a mechanism which could be used with cartridge cases or fixed ammunition?

A. That, of course, was the ultimate end of my desire.

Q. Model X was completed in August?

A. Yes; the last Sunday in August.

Q. How soon after that did you go to work on model Y?

A. The design Y? From a week to ten days.

Q. Did you do that of your own motion, or was it suggested by somebody else?

A. I did it entirely of my own motion.

Q. Then Commodore Folger did not so far accept the design X as to proceed to put it upon a gun?

A. He did not. He was very much pleased with design X, and expressed a wish that I make working drawings of design X, which I did; but having incidentally remarked "I would like to have you get up a gun like that," I concluded that I might go ahead with some of my own ideas, as he was entirely too busy to know what I was doing; and when they were all finished and the working drawings complete, I would have gotten through my work without any adverse criticism or obstruction on the part of the Bureau of Ordnance or any of its assistants or members; there would be simply an order to the navy yard to make a gun on that design without any further argument on my part for any feature in the design.

Q. Was it, then, after Commodore Folger said that he would like you to get up a gun like that that you conceived the idea of design Y?

A. It was in part. The simple rack feature of design Y had been in my mind probably six months. The abandonment of the cam groove of model X for method of engaging a tooth of the rack with

the breech block of model Y was new, and came to my mind while I was getting out the drawings for a gun according to model Y.

Q. You mean the engaging of one of the teeth with the raised side of the tray which serves to direct the block in its rearward motion?

245 A. No; I mean the engagement of the tooth of the rack at the bottom.

Q. That is, the engaging of one of the teeth of the rack with a place cut through the screw of the breech block, and making a slot therein?

A. Yes.

Q. In what other particular was there a new idea in model Y beyond those shown in model X?

A. Merely in the details of the construction.

Q. Then you regard the two as substantially the same in principle, with the single exception you have mentioned?

A. The general principles of the two are the same with the exception mentioned—the details in construction.

Q. Then you regard the double rack as substantially an equivalent for the pinion, &c., which you have described in detail as shown in model X?

A. I cannot use the words mechanical equivalent there to describe that. The rack performs the same functions practically or generally speaking.

Q. Did you regard the model X as unsatisfactory for practical application to existing guns?

A. Unsatisfactory is somewhat of a comparative term; it may have been satisfactory to some persons. It was not entirely satisfactory to me; it was satisfactory to Commodore Folger.

Q. I understand that you did not regard it as satisfactory?

A. I did not regard it as satisfactory.

Q. How soon did you have the design shown by model Y perfected?

A. The design shown by model Y was perfected within the first ten days of September, 1890.

Q. Was that sketch prepared by you, or in what shape was it when perfected?

A. Perfected entirely in my own mind. I did not make any sketch at that time.

Q. After it was perfected in your own mind, what was next done toward putting it in shape so that it could be understood by other minds?

246 A. The first thing I did was to make a series of drawings, partly in ink, partly in pencil, on bond paper with a margin on the side, as it is technically called—the same size required by the Patent Office. When I had everything clearly laid out, I made tracings of these drawings. The tracings I retained, and to the best of my recollection I sent the drawing by mail with a private letter to Commodore Folger, or it is possible I may have brought the drawings in person to Commodore Folger. I cannot recollect exactly which. I told him I had tracings of them, and he said that

he wanted to put them in the Secretary's report along with other illustrations, and that I had better show them to the draughtsman in the bureau, Mr. Weller, and get him to straighten them out a little. The drawings were not very good. I lived in an abandoned fisherman's shanty at the time, and I worked entirely by candle light, and the drawings needed considerable straightening before any lithographing was done from them. Mr. Weller took the drawings and made a series of probably six or seven small-sized drawings all on one sheet. A blue print of these drawings by Mr. Weller was sent to me at Indian Head. The next time I came up from Indian Head I brought this blue print with me, and as I had not yet designed an extractor for the cartridge case, Mr. Weller and I sketched off several kinds of extractors with the mechanism as shown, none of which, however, were of any value. Shortly afterward, as I recollect it, Commodore Folger asked me when I was going to send up the working drawings. I told him so soon as I could get them ready, and in the course of some weeks I made a full-size set of working drawings, which were submitted.

Q. Were submitted to Commodore Folger?

A. Commodore Folger.

Q. Were they approved of as they stood for the construction of a gun, or were they modified before being finally approved?

247 A. As to the approval by signature on the drawings I know nothing. My working drawings were turned over to the draughtsman at the navy yard, who made the drawings from which the guns were constructed. If there was any modification it was one of dimensions only, so far as I know, with perhaps a change in the trigger device. These are the only changes that I know of on those drawings.

Q. What was the scale on which your original drawings, partly in pen and ink, were submitted to Mr. Weller?

A. Those drawings were on the same scale as the Patent Office drawings; I should imagine almost the same size.

Q. Who made the Patent Office drawings for your application?

A. A draughtsman by the name of Stewart, I think.

Q. Where does he belong?

A. He is a draughtsman in the firm of Marble, Mason & Canfield, patent solicitors, Pacific building, Washington, D. C.

Q. Were they copied from Mr. Weller's drawings?

A. They were copied from tracings which I took from the drawings mentioned by me as in pencil.

Q. Then the drawings which Mr. Weller got up, and of which you had blue prints sent you, were on the same scale as the drawings you submitted to him?

A. I think they were. I presume that can be easily verified, as all those drawings, I think, were kept.

Q. Those drawings were not included in the Secretary's report, were they?

A. Not those immediate drawings, but drawings very much like them.

Q. Report of what year?

A. I think it was 1890, with other illustrations. They all figured in the appendix, which consists of illustrations to the report of the chief of ordnance.

Q. And is bound up in the annual report of the Secretary of the Navy for the year 1890?

A. I have never seen that. It was published in a small volume (here produced) entitled "Illustrations to Report of Bureau of Ordnance, Navy Department, 1890."

248 Q. Do you remember when the application for your patent was filed?

A. I think it was filed on November 4, 1890.

Q. And when was it issued?

A. Issued February 9, 1892.

Q. Did you encounter any obstacles in the Patent Office in obtaining that patent?

A. I did.

Q. Did that cause delay?

A. It probably did.

Q. How were those difficulties made known to you?

A. They were made known to me through correspondence with my patent attorney, who informed me that Henri Schneider, of Creusot, France, had a lever in the cocking device of the firing pin which worked in an exactly opposite direction from mine, and there was some question as to the issuance of a claim to either one of us without further consultations by the Commissioner of Patents with certain decisions which he had to look up. So far as I know this was the only difficulty encountered in getting the patent.

Q. At the time that you showed your model X to Commodore Folger and he expressed himself pleased with it, did he not suggest that it would be an advantage if it could be adapted to be used for fixed ammunition or for a metallic gas check?

A. He asked me if I could put an extractor on it, and I told him "Yes, I could." There was no allusion to fixed ammunition, because the use of fixed ammunition was such a trite subject with us that we both tacitly understood that the ultimate end of the rapid-fire device would be the use of a fixed ammunition; for we both knew that any gun that did not use fixed ammunition must be called an obsolete gun today.

Q. The purpose of the extractor was to withdraw a metallic cartridge case?

A. Yes.

Q. And that was the subject of inquiry by Commodore Folger when you showed him X?

A. Yes, it was.

249 Q. And instead of endeavoring to adapt an extractor and firing pin and trigger to X, you went to work on Y?

A. I did.

Q. Was not that partly in order to make a gun better adapted to use a metallic cartridge case?

A. It was.

Q. Then was it not in fact Commodore Folger's suggestion of an extractor that led you to abandon X in favor of Y?

A. It was not; nor had it anything to do with it. He did not suggest an extractor; he merely asked the question could I put it on.

Q. Did that suggest anything?

A. It certainly did not, as the extractor feature is the great bugbear of all the mechanisms. It is easy enough to make a mechanism; but the extractor is the great stumbling block, and has been the world over.

Q. But you did not try to put the extractor on X?

A. I did not; for the reason given in the previous evidence X was intended for a gun already in service.

Q. Was Y better adapted for an extractor than X?

A. Not at all.

Q. Why did you not consider X equally desirable with Y for a new gun?

A. There is too much protuberance or extension on the right-hand side of the tray on X, rendered necessary by the use of the cam groove alluded to.

Q. You enumerated several devices and patents with which you had acquainted yourself at the time you undertook the invention of your own rapid-fire mechanism?

A. I did.

Q. Where had you seen those?

A. I had seen them in Europe and in America.

Q. Had you seen any of them in actual guns?

A. I had.

Q. Which?

A. I had seen one; I should have mentioned Armstrong's. I saw that. The Canet I have seen on a gun at a distance, not close enough to have examined it. The Baronowski I have ex-
250 amined very closely. It first gave me the impression that a slotted screw could be used on a rapid-fire gun, although the Baronowski gun itself is not what would be called a rapid-fire gun.

Q. Where did you see that?

A. I saw that on board the Russian gunboat Strelok, in Peireius, Greece.

Q. Was it before or after that you saw Canet's?

A. It was after that I saw the Canet, and I was so far from the Canet gun that I would not have known it to be a Canet gun had I not heard that that ship carried them.

Q. Now, what else?

A. The Hotchkiss I have seen as a gun, and I think I have seen the Nordenfelt as a gun. I never took any notice of it, because I knew it thoroughly and did not care to.

Q. Which Nordenfelt device do you mean?

A. The one in which the block is first slightly lowered and then pivoted to the rear.

Q. The falling block?

A. Yes.

Q. Not the screw-block?

A. Not the screw-block.

Q. Had you seen the Nordenfelt with a screw-block?

A. Not in the gun.

Q. Had you in the patents or in printed description?

A. I have seen the screw-block of the Nordenfelt in patents, and, to the best of my recollection, have seen it referred to in a printed description; but not described in that description at all compared to a similar block of Canet's.

Q. I am speaking now of the time before December, 1889.

A. Yes.

Q. You are testifying to that period, are you?

A. I am testifying to that period in reference to all the guns mentioned so far, and also one patent of Nordenfelt's on the screw mechanism which I said I saw in the patent.

Q. In the English patent or in the American patent?

A. It was in the American patent.

251 Q. Was that device shown by that American patent, the Nordenfelt, distinguished by having the slot of the screw in spiral form?

A. It was.

Q. Did you see the Canet device described or a picture of it in a patent, or a printed and published description of it before December, 1889?

A. I did not see it in a patent before December, 1889; but I saw the Canet device in photographic views of Canet's proving ground, with the guns thereon, before that time.

Q. Where did you see those views?

A. I saw them, as nearly as I can recollect, in the fall of 1888.

Q. Where?

A. At Annapolis.

Q. Whereabouts in Annapolis?

A. At the proving ground in Annapolis, where I was on duty at the time.

Q. Do you know how they got there?

A. They were sent to the Naval Academy by some officer in the office of naval intelligence. Having been seen in the Naval Academy by some of the officers attached to the proving-ground they were brought over the river, and we had them over there several weeks looking at them.

Q. Will you please fix, as nearly as you can, the date of that?

A. I do not think I can fix that any more closely. My only link with dates is the fact that there were several officers there at the time who were not there in the fall of 1889, and it was some time before they went away.

Q. Then it may have been in the fall of 1888 or the spring of 1889?

A. Yes, it may have been in the fall of 1888 or the spring of 1889; it was during cold weather, as I recollect it. But the date of all that is extremely uncertain with me—when that book came there.

Q. Was that the same device which you have subsequently seen in the Canet patent issued in the United States?

252 A. Yes; I saw that same device.

Q. Was it the device for light guns or heavy guns?

A. It was a device for heavy guns. There was also a picture of a device for light guns.

Q. Similar to the United States patents subsequently issued to Canet for light guns?

A. There were several patents; I cannot say without seeing the patent.

Q. Then, if I understand it correctly, you had seen breech mechanism devices for handling the slotted screw-block design, or known by the name of Baronowski and the Canet and Armstrong, prior to December, 1889?

A. It is too complimentary to call the Baronowski a device; it is simply a block with handles.

Q. In what way did it differ from the ordinary devices in use for handling the slotted-screw breech block?

A. It had an extractor and a firing pin, and used primed ammunition.

Q. Was it a small gun or a large gun?

A. Three and a half inch.

Q. Do you mean it used fixed ammunition, or did it have a friction primer?

A. No; it had a percussion primer and firing pin.

Q. Centre fire, I suppose?

A. To the best of my recollection it was a centre fire.

Q. When did the shop at the navy yard at Washington begin the manufacture of the first mechanism of your device; I mean the one described here for rapid-fire guns?

A. It was in the fall of 1890.

Q. Was it before you filed your application for a patent?

A. That I do not know.

Q. It was just about that time, was it?

A. It was just about that time. I rarely went to the navy yard except on duty in reference to the proving ground.

Q. When was the mechanism of your gun finished?

A. As nearly as I can recollect it was in the spring of 1891.

253 Q. As the making of that gun with your mechanism progressed, did you find it necessary to make slight modifications or changes in structure?

A. It was not necessary; it was advantageous to make slight modifications.

Q. Were such made?

A. Such were made.

Q. And made under your supervision or approbation?

A. Made under my approbation, not under my supervision.

Q. Do you remember what they were?

A. A change from a leaf spring to a spiral spring for the trigger.

Q. Were there any other changes?

A. Not that I know of.

Q. I suppose, of course, that you consented to the making of this mechanism by the Bureau of Ordnance, or by the establishment under Commodore Folger's command?

A. I had nothing to do with that. I was told that they were going to make a gun; beyond that I did not question or did not know anything.

Q. You knew it was going to be made, and you consented to Commodore Folger's going ahead and making it?

A. I tacitly consented; I did not protest except in a mild way; that is, I did not think it was entirely just to me.

Q. What was the protest as you made it?

A. It was verbal, and it stated that I did not think it was giving me a fair show to have my mechanism made public before I had gotten the patent on it.

Q. Did you object to making it before any arrangement was made for your compensation?

A. I did not, except this patent of which I speak.

Q. Did Commodore Folger say anything to you about compensation at that stage of the work?

A. He did not.

Q. When first did he say anything about it?

A. It was in reply to a question on the subject from me.

Q. Did you ask for any?

A. Yes.

254 Q. When?

A. I cannot fix the date.

Q. Was it in 1891?

A. It was probably in 1891, probably toward the close of that year—the fall, I should think.

Q. With the exception of that protest, whatever was done by Commodore Folger in making or applying this mechanism to guns in the Washington navy yard had your approbation and assent, did it?

A. Oh, yes.

Q. Was the manufacture for a time conducted in secrecy?

A. Never to my knowledge.

Q. Was any effort made to keep your invention secret?

A. Only by me, so far as I know.

Q. Do you remember the fact that Lieutenant Seabury asked you for some description of your design by letter?

A. I do.

Q. Do you remember the fact that you declined it at that time?

A. I do.

Q. Did you so decline it in conformity to direction from Commodore Folger?

A. Only in conformity to general instructions on mechanisms and other designs. I have no recollection of anything specific in regard to it.

Q. Did he give you any directions not to divulge your mechanism?

A. He did not.

Q. Or any description of it?

A. He did not, except in a very general way.

Q. Well, what was the extent of it?

A. To the extent that the bureau does not desire to divulge any of its plans in development.

Q. Did Commodore Folger ever tell you that he had seen a model of Seabury's device?

A. I am not sure that he ever told me that he had.

Q. Did he ever tell you that he had received Seabury's blue prints showing his device for a four-inch gun?

A. He never did.

255 Q. Did you have any talk with Commodore Folger about the use of fixed ammunition for your guns?

A. A great many.

Q. When first?

A. That I cannot say; I do not remember.

Q. Was it before the working drawings were completed for the first gun?

A. No; I think not.

Q. Was there a discussion of different forms of fixed ammunition, or was the idea confined to a single form of the metallic cartridge case?

A. The idea was, so far as I know, confined to a single cartridge case.

Q. Did it relate to a cartridge case connecting to a projectile exclusively, or did it also relate to a cartridge base which would not be long enough to connect to the projectile?

A. It never related to the latter; it related to the former in part.

Q. Did he ever suggest to you that he had an idea of using the metallic cartridge base which should be only one or two calibres in length at the most?

A. We had discussed that feature.

Q. How early did you have such a discussion?

A. In 1883 some time; I cannot fix the date.

Q. Was that discussion conducted down through succeeding years?

A. No; I have been to sea since then.

Q. Was it ever afterward renewed?

A. We may have discussed it since then. I do not recollect exactly.

Q. Was ever such cartridge base as distinguished from a cartridge case employed in the firing or test of the gun in connection with your mechanism?

A. It was.

Q. When was that done?

A. I think that was in July; the summer of 1892 anyhow—somewhere along there.

256 Q. Do you mean 1892 or 1891?

A. I rather think it was 1892.

Q. Was it during the testing of your first gun?

A. No.

Q. When did you graduate from Annapolis?

A. In 1881.

Q. And what have been your assignments to duty since that time?

A. After graduating I was assigned to duty on board the U. S. S. Essex; remained on her until the spring of 1883; I returned to Annapolis for what is called the final graduation in June, 1883; was ordered to duty under instruction in ordnance at the Washington navy yard in August, 1883; was detached from that duty the same month, after thirteen days at the navy yard, and ordered to the naval proving ground at Annapolis; I remained at the naval proving ground at Annapolis until April 1, 1885; was ordered that day to the U. S. S. Pensacola, and remained on her until March, 1888; was ordered to the naval proving ground at Annapolis in April, 1888; detached from the naval proving ground at Annapolis June 20, 1890; ordered to work in connection with the new proving ground, and am still on duty at the new naval proving ground at Indian Head.

Q. Were you stationed at Washington for several months between the end of your duty at the Annapalis proving ground and the assignment to the Indian Head proving ground?

A. I was at Washington at intervals during the time from June 20 until December 1.

Q. Your time divided between Indian Head and Washington?

A. Between Indian Head and Washington.

Q. And it has been so more or less ever since that time?

A. Yes.

Q. Did Commodore Folger ever request or advise you to get up a device for rapid fire mechanism, I will say prior to June, 1890?

A. No, he did not.

257 Q. Did he ever do so except in so far as you have stated in your testimony?

A. He never has done it except in general discussions, in which he showed the need of such.

Q. When did he first know that you were working on rapid-fire mechanism?

A. In December, 1889.

Q. Did you converse with him on that subject at that time?

A. Yes; it could be called a conversation.

Q. What took place?

A. We were on a street car coming from the navy yard, and as I got off the car I said, "Captain, I have a rapid-fire mechanism for you." He said, "That is good; shove along with it." That was all the conversation we had.

Q. When did you first show him anything definite?

A. The last Sunday in August, 1890.

Q. The day you showed him model X?

A. Yes.

Q. Was that the time when he spoke to you about being sure that gun did not infringe the Seabury design, or was it later?

A. That conversation that you allude to was probably later than that.

Q. Please fix it as nearly as you are enabled to do.

A. I should say, as nearly as I am able to, first part of November or last part of October.

Q. Was that when the conversation turned to the actual making of the gun from your design?

A. That I cannot say. I have had many conversations on the subject.

Q. Was it before or after you made the drawings which you gave to Mr. Weller?

A. I rather think it was before that; perhaps it was on that same visit—I will not be sure.

Q. Will you try to state as well as you can the language or the conversation that took place at that time?

258 A. I should like to do so, but I do not remember beyond what I have said in the first part of my testimony, in which Commodore Folger, in effect, asked me whether I had looked into the matter carefully to see whether it interfered in any way with Seabury's design, and others as well.

Q. What others were mentioned besides Seabury's?

A. I think Canet's may have been mentioned. It may have been mentioned by Commodore Folger, and I think it is probable that I mentioned several others, whose names I have already given.

Q. Have you a definite recollection of any being mentioned?

A. I have a definite recollection of my mentioning Driggs and Hotchkiss.

Q. Have you a definite recollection of any other slotted-screw mechanism being mentioned except Seabury's?

A. Canet's is the only one that I know of or recollect now.

Q. Are you positive that Commodore Folger mentioned Canet's also?

A. Yes; Canet's was as much under discussion as any of them, I am quite sure, at that time.

Q. Did you remember, or did you understand at that time whether Canet's invention had been patented in the United States?

A. I do not know. I presume it was patented in the United States. I do not know definitely whether it was or not. The invention was a well-known fact.

Q. And is that all you can recollect of that conversation?

A. That is all I can recollect of that conversation.

Q. At that time were you aware of Seabury's patent?

A. I was.

Q. Under your direct examination you made some distinction between features in your device which were new, and as you regarded it, original with you, and others of which you did not claim the merit of novelty. With reference to these two models X and Y, discriminate between those two classes of elements.

259 A. In my direct examination I used the word "principles," and endeavored to distinguish between "principles" and "details of construction."

Q. If I have misstated your testimony, please in your own way, with reference to these models, describe what part you claim to be your own invention and what you do not claim to be such.

A. To state what I claim to be my own invention I will have to refer to what I invented. (Taking patent No. 468,331, dated February 9, 1892, as a guide.) Claims 1, 2, 3, 4, 5, 6, 7, 8, and 9—such combinations as are indicated in these claims are shown in model Y; claims 10, 11, 12 and 13 have principally to do with the firing mechanism, and no firing attachments of any kind are shown on model Y, as they do not enter into the case at all.

Q. Referring to model X in connection with your direct testimony, as to some part originating with you and some part having been previously known or in use, which part of it do you refer to as originating with you?

A. In all rapid-fire mechanisms on this slotted-screw principle known to me, the unlocking of the plug and the withdrawing of the tray, and *vice versa*, are motions performed by what is commonly known as a step-by-step, or lost-motion mechanism; that is, generally speaking, the plug is first turned while that part of the mechanism which is intended to withdraw it remains inoperative; and again, as the plug is being put into the gun, the plug is pushed along the tray by one part of the mechanism while that part which is to turn it for locking remains inoperative—waiting for the plug to come to it, so to speak. In this design of mine there are two forces at work upon the plug at all times, while the plug is either being unlocked or translated—one to revolve the plug, the other to translate it. In other words, there is no lost motion of any kind, and the adjustment of the plug with respect to the gun depends on the gun itself and its parts which engage this plug, and not upon the tray. So that faulty adjustment of the tray does not nec-
260 essarily interfere with the working of the gun, as has been clearly demonstrated in practice. This principle above described is carried out by means of the right-angle bell-crank lever, which I call the translating arm. This is the new principle which I believe to be my invention, and the details of construction are also believed to be entirely new.

Q. Then, am I to understand you as claiming that the long end of the bell-crank lever begins to pull as for the withdrawing of the block at the very moment when rotation of the block begins?

A. You are.

Q. And what effect do you claim for that upon the block while the process of rotation is going on?

A. It draws the block backward in the gun, and relieves the great friction on the forward part of the screw-thread.

Q. How is that pressure communicated to the end of the long arm of the bell-crank lever and the pin which is fitted to that end when the handle is rotated from closed breech?

A. It is communicated through the pivot of that handle.

Q. Where is that handle pivoted?

A. That handle is pivoted in the elbow of the bell-crank lever.

Q. Which has a hole in it?

A. Yes.

Q. Do you claim that first portion of the rotation of the lever by pulling it away from the breech of the gun in any way affects the bell lever?

A. I do—the bell-crank lever moves to the rear.

Q. Does it move to the rear until rotation is completed?

A. It moves to the rear until the rotation is completed.

Q. Before it is completed?

A. Before it is completed.

Q. What causes it to do so?

A. The pull on the main lever, which has its pivot in the elbow of the bell-crank lever.

Q. By what fulcrum is the pull transmitted?

A. By the fulcrum of the bevel-gear teeth of the two pinions.

261 Q. And you claim that they do more than to rotate the segment of the small pinion with which they communicate?

A. They do.

Q. And you claim that there is absolutely no loss of motion in the rotation of that lever?

A. There is no loss of motion except the necessary and unavoidable lost motion generally called "back lash" in the teeth of the gears.

Q. Have you now answered my prior question in regard to novelty in model X as fully as you desire to do?

A. Yes; I have done so.

Q. Then, as Y is substantially the same in principle as X, if I understand you correctly, the same features of novelty would be then those which you claim in Y?

A. I have not claimed any in Y.

Q. The comparisons with the inventions of others at the time of your invention would correspond with this in X?

A. Not entirely.

Q. The additional ones would be found in the shape and adjustment of the parts of the mechanism, would they, or in what?

A. Beside the principle enunciated in regard to the bell-crank lever and its connected gears of model X, (which principle appears in model Y,) the engaging of the right-hand vertical tooth of the rack with the longitudinal groove in the breech block of model Y embodies an original principle of design which is most important from an ordnance point of view.

Q. By that you mean the extra narrow threads cut through the slot on the breech block, which are in the extreme bottom of the block in the open position of the model Y?

A. Yes.

Q. Engaging with the last tooth of the rack-bar?

A. Rack-bar; yes.

Q. How many guns have been completed with your mechanism upon them?

262 A. I do not know exactly; I should say about forty-eight to fifty guns.

Q. Upon how many more is it now being applied, so far as you know?

A. That I do not know exactly—about a hundred more.

Q. Completed and incompleted, the extent of the manufacture, so far as your knowledge goes, would be about one hundred and fifty?

A. One hundred and fifty.

Q. Ranging between what sizes?

A. Four inches and six inches, inclusive.

Q. And are they all adapted to firing fixed ammunition?

A. They are not.

Q. How are they divided in that respect?

A. The four-inch and five-inch calibers fire fixed ammunition; two completed six-inch fire the ordinary charge, with the De Bange gas check.

Q. Are the other six inches being constructed for the same use?

A. So far as I have been able to learn from hearsay, the rest are to fire fixed ammunition.

Q. Have more than two six-inch guns yet been completed?

A. Only two.

Redirect examination.

By Mr. PHILLIPS:

Q. Since you were cross-examined upon the picture of the Dashiell mechanism in the report of the Bureau of Ordnance, have you found the same in the appendix to the annual report of the Secretary of the Navy of 1890?

A. I have found a plate of drawings of my rapid-fire breech mechanism in the appendix to the report of the chief of ordnance to the Secretary of the Navy for 1890, and also embodied in the report of the Secretary of the Navy, published as such for the same year—1890.

ROBERT BROOKE DASHIELL.

Sworn to and subscribed before me this 24th day of March, 1893.

WM. HERBERT SMITH, *Examiner.*

263 WALLACE A. BARTLETT, mechanical expert, a witness on behalf of the defendant, having been first duly sworn, testified as follows:

By Mr. PHILLIPS:

Q. What is your age, residence and occupation?

A. Age, 48; residence, Highland, Maryland; doing business in Washington, as a solicitor of patents.

Q. Have you had any experience, and if so what, to qualify you

as an expert in patent matters, especially about ordnance construction?

A. I was from 1876 until 1883 principal examiner in the U. S. Patent Office, having charge of the class of fire-arms, among other classes. I passed upon nearly all cases, and was responsible for all cases which came before the Patent Office in that time, relating to fire-arms. I have made mechanisms a study, and have had some experience in the construction of machines, and especially of fire-arms, within the last ten years. I have appeared as an expert in patent causes in a good many instances, and two or three times in cases relating to fire-arms.

Q. Can you give the names of the important cases in which you have been engaged as an expert?

A. One case, I think, was Eager *vs.* Folger, or the United States, before the Court of Claims; one case Smith *vs.* Le Fevre Firearms Company, United States circuit court, northern district of New York. I have appeared in other matters before the courts in Wisconsin, Illinois, New York, Ohio, and probably other States I do not now recall.

Q. Have you examined the patent of Lieutenant Seabury, No. 425,584, of date of April 15, 1890, and if so, state what are the claims of that patent as you understand it?

A. I have carefully read the Seabury patent No. 425,584, of April 15, 1890, and think I understand the construction therein de-
264 scribed. I have particularly considered the claims, and especially claim 1, which is on its face a broad and generic claim, covering:

"The combination, with a breech-loading cannon and a breech block for the same, which is withdrawn in a rearward direction; of a breech-block carrier, hinged to the breech, and a breech-block retractor, hinged to the breech, separate from said carrier to move independently of said carrier, to draw the breech block thereinto and push it therefrom, but capable of moving with said carrier while the breech block is therein, substantially as herein set forth."

This I consider to be a broad claim, covering, beside elements known to be old and necessary in gun construction of this kind, certain elements supposed or believed to be new and necessary to produce a new operation of the breech mechanism of the gun.

Claim 2 in said patent is:

"The combination, with a breech-loading cannon and a breech block for the same, which is withdrawn in a rearward direction; of a breech-block carrier, by which the breech block after withdrawal is moved aside out of the way of the breech, a breech-block retractor for withdrawing the breech block from the breech into the said carrier, and a spindle supported in bearings attached to the breech and constituting a pivot upon which the said breech-block carrier and breech-block retractor are capable of separate movements, substantially as herein set forth."

This I consider a moderately broad claim, covering elements which were known to be old, and one element at least which was supposed to be new, and to which the claim was restricted by a

somewhat specific definition of this element, namely, the spindle and the connection by which said spindle was supported. This claim (No. 2), in my opinion, has no bearing on the construction of what is known as the Dashiell gun.

Claim 3 of the Seabury patent is as follows:

"The combination, with a breech-loading cannon and a breech block for the same, which is locked and unlocked by turning it in the breech, and is withdrawn in a rearward direction; of a breech-block carrier hinged to the breech; a breech-block retractor, also hinged to the breech, and capable of moving independently of said carrier; a locking device for locking the breech block, the said carrier and the said retractor together; a pivotal spindle common to the hinges of the said carrier and retractor; a crank arm on said spindle geared with the breech block for turning it, and a driving projection on said spindle for actuating the said retractor, and through it the carrier, the said projection being arranged with a lost motion between it and the retractor, substantially as and for the purpose herein set forth."

265

This claim I consider quite a specific claim for the precise mechanisms therein described, and, in my opinion, it has no bearing on the construction of what is known as the Dashiell gun.

Claim 4 of the Seabury patent reads:

"The combination, with a breech-loading cannon and a breech block for the same, which is locked and unlocked by turning it in the breech; a swinging breech-lock carrier hinged to the breech, and a spindle which forms the pivot of the hinges of the said carrier; of a toothed rack geared with the said breech block, and a crank arm on said spindle connected with said rack to produce the turning of the breech block for locking and unlocking it, substantially as herein described."

This claim I consider a generic claim, but not a very broad one; and that, independently of all other constructions, the claim might or might not be construed to apply to the construction of the Dashiell gun, accordingly as the doctrine of equivalents is understood and applied.

Claim 5 of the Seabury patent reads:

"The combination, with a breech-loading gun, a mutilated-screw breech block for the same; of a breech-block retractor consisting of, first, an arm; second, a hinge by which the said arm is connected with the breech of the gun; third, a ring screwed into the breech block; and, fourth, a sliding connection between the said arm and ring, a pivot spindle by said hinge, engaging with said arm, with a lost motion, a pinion on said pivot; a toothed rack geared with said pinion, and a lever for carrying said rack; said lever having its fulcrum on the breech of the gun, substantially as and for the purpose herein described."

266

This claim I consider a specific claim for the mechanism therein stated, and that it has no application to the Dashiell gun as constructed.

Claim 6 is as follows:

"The combination, with a breech-loading cannon, a breech block

for the same, which is locked and unlocked by turning it in the breech, and is withdrawn in a rearward direction, and a breech-block retractor, having a swinging arm, which is hinged to the breech, and in which the breech block is capable of turning; of a spindle constituting the pivot of the hinge of the said retractor, and having a rigid projection for acting upon the swinging arm of the retractor with a lost motion to withdraw the breech block; and a trip-pin attached to said arm to engage with said projection for the return movement of the retractor, but to be tripped during the withdrawing movement, substantially as herein set forth."

This is quite a specific claim for mechanism which I do not find in the Dashiell gun. I therefore find in the reading of the patent, as I understand it, and in its relation to the construction of the Dashiell gun, which I have examined, that independently of all other matters, claim 1 of the Seabury patent would, in my opinion cover the construction of the breech mechanism of the Dashiell gun, and claim 4 of the Seabury patent is open to question in the same connection, while the other claims of the Seabury patent do not bear upon the matter in litigation.

Q. Have you examined any breech-loading cannon at the United States gun foundry resembling any part of the construction
267 embraced in said patent to Seabury? If so, state the general construction of such cannon and its origin, so far as you are informed.

A. I have examined at the navy yard, the gun foundry in Washington, a four-inch breech-loading rifle No. 36, known as, and represented to me to be, the Dashiell gun. I have compared said gun, so far as relates to the opening and closing mechanism of the breech, with Seabury's patent No. 425,584, with Dashiell's patent No. 468,331, and with the model Exhibit Y. I find the construction of such gun agrees substantially with the construction set forth in the Dashiell patent No. 468,331 and with the model Exhibit Y.

Q. I understand you to say that that model Y corresponds with the gun?

A. The Dashiell model Y, and the Dashiell patent, and the Dashiell gun I tie together. The testimony which applies to one, so far as this breech mechanism is concerned (which is all that I gave particular attention to), applies to all three.

Q. State in what respect the claims of the Seabury patent No. 425,584, of April 15, 1890, apply to the gun you saw at the foundry, and wherein they do not.

A. Claim 1 in the Seabury patent is for a combination. The elements first stated are a breech-loading cannon and a breech block for the same. These elements are common to nearly all guns of this general class. The next element is a breech-block carrier hinged to the breech. This I interpret to mean the tray upon which the breech block moves when it is withdrawn from the gun. I find this element present in the Dashiell gun. The next element mentioned in Seabury's first claim is a breech-block retractor, hinged to the breech, separate from said carrier, to move independently of said carrier, to draw the breech block therein. I do not find pre-

cisely this construction in the Dashiell gun or model, but I find what may fairly be called a breech-block retractor hinged to the breech carrier instead of to the breech. There is a little difference in the mode of operation of withdrawing the breech plug from the breech and depositing it upon the carrier. I should not
268 consider this difference a vital one, and if claim 1 in the Seabury patent is entitled to the broadest construction of which its language is capable, I should consider that it covers the construction of the Dashiell gun; whereas, if by reason of the state of the art, such claim is incapable of the very broadest construction, I should think it did not cover the Dashiell gun.

As to claim 4 of the Seabury patent, it is for a combination with a breech-loading cannon of a breech block which is locked and unlocked by turning it in the breech, these features being common in this particular class of guns, but not common to some other kinds of guns. The next element is a swinging breech-block carrier, hinged to the breech, which also is an element common to this kind of guns, and probably to some others. The next element is a spindle which forms the pivot of the hinge of the said carrier, which spindle is also common in this class of guns. The next element is a toothed rack geared with the said breech block, which rack is present in the Dashiell construction. The next element is a crank arm on said spindle connected with said rack. Strictly speaking, I do not find a crank arm in this relation on the Dashiell gun. Whether the mechanism present in the Dashiell gun is or is not the mechanical equivalent of this crank arm is a debatable question; but I am of the opinion that in this instance it is not the mechanical equivalent, for the reason that in the Seabury construction the crank arm operates with a variable leverage from a uniform centre of movement, while in the Dashiell construction the segmental gear operates with very nearly a uniform leverage, but with a varying centre of movement.

Q. Does Exhibit Z fairly show the construction described in the Seabury patent?

A. I have not examined Exhibit Z as to all the parts, but only as to the parts covered by claims 1 and 4, and in my opinion said Exhibit Z does fairly illustrate the subject-matter of those claims as described in the Seabury patent.

Q. Have you examined the state of the art as bearing on claims 1 and 4 of the Seabury patent. If so, state the nature and
269 result of such examination, referring to patents and publications, and state the bearing of such matters on the claims of Seabury as you understand them?

(NOTE.—It is understood that the Seabury device or patent relates to the patent mentioned in the bill of complaint; and that the Dashiell device or any reference to the Dashiell patent refers to the Dashiell gun as made.)

The WITNESS: I have examined the state of the art as bearing on the construction described and claimed in the Seabury patent, and particularly as claimed in claims 1 and 4 of said patent. I

find Seabury's statement of invention to be quite broad. Seabury states after describing generally the kind of gun to which his invention applies:

"In such a gun there are three movements necessary to open the breech, namely: first, the turning of the breech plug to unlock it; second, the withdrawal of the breech plug backward into the receiver; and, third, the swinging aside of the receiver with the breech block in it. These three movements have hitherto been separately performed by hand, the breech block having been first turned and unlocked by hand, and then pulled by hand back into the receiver, and the receiver having been then swung aside, by hand, with the breech block in it, to open the breech."

My examination into the state of the art convinces me that the patentee was mistaken in stating that these three movements had hitherto been separately performed by hand, as I find quite a number of breech-loading guns in which the movement is performed by a continuous movement of a lever. I call attention to the U. S. patent of Schenkl, No. 9943, of August 16, 1853. This is a gun with a mutilated screw-breech which locks in the same way as the mutilated screw-breech block of Seabury and Dashiell. In this patent the patentee says:

"My invention consists in a method of unscrewing the breech from the barrel and withdrawing the same; of turning up the breech so as to bring its chamber into a vertical position for loading, and then returning the breech into the barrel and locking
270 the two together, which motions are performed through the intervention of appropriate cams, catches and springs by the motion of a single lever worked by the hand of the gunner."

In examining this construction it will be understood that the first movement of the hand lever in opening the breech rocks the breech block on its longitudinal axis to disengage the mutilated screw-threads. A pawl connected with the lever is then brought into engagement with a projection on the breech block and moves the same back. So far, the operation of the device is substantially the same as that of Seabury. The further movement of the breech block is a turning on its transverse axis so that the front portion of the breech points upward, and the charge is inserted in the breech instead of into the gun, as in more modern guns. This I do not consider the precise equivalent of Seabury's construction. I consider the device, as a whole, as very suggestive, and as showing a mutilated screw-breech which can be manipulated by a continuous movement of the hand lever, and thereby showing Mr. Seabury was mistaken as to the scope of his invention as set forth in his statement of invention.

I next refer to the United States patent of J. W. Cochran, No. 26256, of November 29, 1859. This gun is also a gun in which the breech locks by means of a mutilated screw. The operations of opening and closing the breech were mainly by hand; but the patentee states, referring to the mechanism:

"Said breech piece is fitted to turn freely in a ring or circular frame E, which is hinged by a hinge J to a slide F, which works in

a groove in one side of the gun, said slide being intended to be operated by a rack and pinion, or any other suitable contrivance to permit the ring E to be moved back far enough to withdraw the breech piece longitudinally from the gun before moving it aside, as shown in figure 2."

This indicates that as far back as 1859 it was known in this art that mechanism other than a direct pull could be used to carry the breech-block carrier away from the gun.

271 I next refer to the United States patent of Driggs, No. 360,798, dated April 5, 1887. This patent describes a breech-loading gun which does not have a mutilated screw-breech, but does have a breech block which swings backward in opening. As ordinarily constructed, and as shown in the patent, I believe this breech block swings downwardly. But I should not consider it invention to turn the gun through an angle of ninety degrees and swing the block sidewise instead of downward, such a movement of the breech block being well known to ordnance experts.

This gun of Driggs was one of a class known as rapid-fire guns, in which the entire movement of opening the breech block is effected by a single movement of the hand lever, and the retraction of the cartridge shell is accomplished at the same time. The closing of the breech block is effected by a reverse movement of the lever. The patent merely goes to show that it was quite well known in the art to either open or close the breech of a gun by a single movement of the lever.

I next refer to the United States patent of Nordenfelt, No. 384,537, dated June 12, 1888. This patent applies to the modern class of rapid-fire guns. The patentee says:

"My improvements relate to that class of breech mechanism in which the breech of a gun is closed by a block having segments of a screw-thread on its sides to lock into corresponding segments within the interior of the breech, so that to open the breech the screw-block is to have a partial turn given to it and then to be drawn backward. According to my invention, I, by means of one turning movement of a lever handle, which forms part of a movable breech piece, give to such screw-block, first, the turning movement to disengage the screw-threads, then a backward movement to draw it back clear of the breech, and then carry it to one side to leave a clear opening in the breech end of the bore."

The Nordenfelt breech block is a mutilated-screw breech block. When it is opened it is drawn into a carrier which is hung
272 on a pintle extending from the breech of the gun, and is swung to one side on said pintle. This patent I consider has all the elements of Seabury's claim 1 in substantially the same relation, if it be considered that the swiveled breech-block retractor of Nordenfelt is the mechanical equivalent of the hinged retractor of Seabury. As the retractor of Nordenfelt has the same function and operates in very nearly the same way, I consider it the mechanical equivalent in this case.

The next patent to which I will refer is the English patent dated July 4, 1887, No. 9453, of Sauve's, who appears as the English

representative of Gustave Adolphe Canet, of Paris, France. This patent describes a gun with a mutilated screw-breech, which is withdrawn in a rearward direction, and has a breech-block carrier hinged to the breech, and a breech-block retractor hinged to the breech to draw the breech block into said carrier, and to swing the carrier. This construction, in my opinion, has element for element precisely the construction covered by claim 1 in the patent of Seabury, and, in view of said patent, claim No. 1 of Seabury's patent can only be held to be a valid claim by an interpretation which limits it to the precise mechanism described in the specification. A broader interpretation would bring said claim into direct conflict with the prior construction of Canet.

The next patent to which I will refer is the English patent of Canet, No. 9813, of July 12, 1887. This patent describes a mutilated-screw breech mechanism, a breech-block carrier hinged to the breech, and a breech-block retractor hinged to the breech to move independently of said carrier. to draw the breech block therein and push it therefrom, but capable of moving with said carrier while the breech block is therein. In other words, the first claim of the Seabury patent applies as well to the construction described in the Canet patent as to the mechanism described in the Seabury patent, save as claim 1 is limited by the words "substantially as herein set forth."

I next refer to the English patent of Nordenfelt, No. 7195,
273 dated May 17, 1887. In my examination of the records in the United States Patent Office, I find the copy of the English patent therein of record bears the following stamp:

"Received United States Patent Office May 1, 1888."

This patent of Nordenfelt describes a breech-loading gun:

"In which the breech block is closed by a block entering the breech opening and having spaced screw-threads upon it engaging with corresponding spaced screw-threads within the breech of the gun."

The patentee further says:

"In such guns I give all the necessary movements to the breech block by means of a lever handle and axis rotated through the arc of a circle. The same movement also actuates an extractor and gives the necessary movement to it for withdrawing the cartridge case from the chamber of the gun."

I have carefully examined this patent, element by element, and all the elements named in Seabury's claims 1 and 4 are found in this patent, and in their same relation to the other operative parts of the gun, and the operation of the device is identical with the operations of the elements of claims 1 and 4 of Seabury's patent. Seabury's shows and describes a mutilated-screw breech block. So does Nordenfelt. Seabury describes and claims in claim 1 a breech-carrier hinged to the breech; Nordenfelt shows in the part "I," as lettered in the drawing figure 1, a breech-carrier hinged to the breech block. In figure 1 of Nordenfelt's drawing the carrier is hinged at the left-hand side of the gun, while in Seabury's patent it is hinged at the right-hand side. This is the only difference, ex-

cept possibly slight mechanical details of construction. There can be no difference in the mode of operation. Nordenfelt shows a retractor, which is lettered "K" in figure 1 of the drawing, and which is hinged to the breech, separate from said carrier. The operation of the Nordenfelt device, so far as relates to the subject-matter of claim 1, is that by swinging of the hand lever to the rear the retractor is first actuated to withdraw the breech block into the
274 carrier, and then to swing the breech block and carrier together to one side, precisely as in the Seabury device. Nordenfelt describes in his patent how the unlocking of the block is effected by a sliding bar, which engages the breech block to unlock the same, and, while this unlocking is performed there is a lost motion to the retractor, precisely as in the Seabury retractor. The mechanism by which this lost motion is effected differs somewhat in the Nordenfelt device from that described by Seabury. But as the mechanism does not enter as an element into Seabury's claim 1, save as it is included in the words "substantially as herein set forth," I am convinced that the Nordenfelt English patent No. 7195, of 1887, is a full, precise and complete anticipation of Seabury's claim 1, unless said claim be limited to the precise mechanism described in his specification.

Referring now to Seabury's claim 4, we find that claim covers—

"The combination with a breech-loading cannon, a breech block for the same, which is locked and unlocked by turning it in the breech; a swinging breech-block carrier hinged to the breech, and a spindle which forms the pivot of the hinge of said carrier; of a tooth rack geared with the said breech block, and a crank arm on said spindle, connected with said rack to produce the turning of the breech for locking and unlocking it, substantially as herein described."

Turning to the Nordenfelt English patent, No. 7195, I find therein a breech-loading cannon, a breech block for the same, which is locked and unlocked by turning it in the breech, a swinging breech-block carrier, as shown and described by the part lettered "I" to which I have before referred; a spindle, which forms the pivot of the hinge of the said carrier shown and described in the part letter "B" of the drawings; a tooth rack geared with the said breech block, said toothed rack consisting in the Nordenfelt construction of the bar "E," which has one notch and two teeth only in-
275 stead of five notches and six teeth, as shown in Seabury's figure 7, but having precisely the same relation to the breech block as the toothed rack in the Seabury patent. I further find a crank arm on said spindle, shown by the arm "D," (carrying stud or roller "D 1"), which engages the sliding bar "E." I, therefore, believe the Nordenfelt patent No. 7195, of 1887, fully and completely anticipates the Seabury claim No. 4 as to all its essential elements, and that said claim can only be held to be a valid claim if limited to the precise construction described in the body of the specification.

In my investigation I further find the English patent to Farcot, No. 3402, of March 5, 1887, to have a bearing on the Seabury patent very similar to that of the Canet patent to which I have re-

ferred; but as I have not the Farcot patent now at hand, I cannot at this moment go into the details of construction therein set forth.

Q. Referring to Canet's English patent 9453, of 1888, please explain particularly its bearing on Seabury's claims 1 and 4 in patent No. 425,584, and on the construction you saw at the gun foundry—the Dashiell gun.

A. As I have explained, the construction shown and described in the English patent embodies the broad combination covered by claim 1 in the Seabury patent, and also embodies in a general way the construction embraced in the Dashiell gun, but more nearly resembles the construction of the Seabury than the Dashiell device, for the reason that the retractor in the Canet device acts from a fixed centre as does the Seabury, while the retractor in the Dashiell device acts from a moving centre, when said retractor is in operation to carry the breech block either into or move it out of the carrier.

Q. Make a similar explanation of the Farcot English patent of 1887.

A. That is the one I have not at hand.

Q. Give a similar explanation of the Nordenfelt patent, 7195, of 1887, on the Seabury and Dashiell construction.

A. The Nordenfelt construction, as I have explained, em-
276 bodies every feature set up in Seabury's claim 1 or 4, when interpreted in any manner as broad or generic claims. The Nordenfelt construction has the rack-bar, which rotates the breech block on its centre attached to the breech of the gun, and it remains in its sliding way on the breech of the gun. The corresponding device in the Seabury construction has a similar location and similar operation, and also remains on the gun. In the Dashiell device the sliding rack-bar is located in the carrier, moves with the carrier, and has not only the function of turning the breech on its axis, but also serves as a fulcrum against which the lever acts in opening the breech. The Seabury device is the precise mechanical equivalent of the Nordenfelt device; whereas the Dashiell device so far referred to is not precisely the mechanical equivalent, but has other and further functions. As I explained, the Dashiell retractor is not the Nordenfelt retractor, whether it be or be not the mechanical equivalent thereof. In all substantial respects of construction, so far as the elements of Seabury's claims 1 and 4 are concerned, the Seabury device is much more nearly like the device described by Nordenfelt than is the Dashiell device like either that of Seabury or Nordenfelt.

Adjourned to meet tomorrow, the 25th inst., at 10 o'clock a. m.

WASHINGTON, D. C., *March* 25, 1893—10 o'clock a. m.

Met pursuant to adjournment.
Present on behalf of the complainant-, Mr. Wilson.
Present on behalf of the defendants, Mr. Phillips.

Whereupon direct examination of WALLACE A. BARTLETT is continued.

By Mr. PHILLIPS:

Q. Please examine Exhibit Y and state wherein you find resemblances to and differences from Exhibit Z.

A. The model Exhibit Z, which I have testified is a fair representation of the Seabury patent, concerns the breech opening and closing mechanism, has a mutilated-screw breech
277 block, common to all this class of guns. As compared with model Y, I find a slight difference, in that model Y has four segments cut away, whereas the model Z has three segments cut away. This would make no great difference in the operation of the device, except that in locking, model Y needs to be turned through a somewhat smaller arc, and the same is true as to unlocking.

Model Z has the supporting tray in which the plug is drawn, in opening the breech, hinged to a pintle, which is supported on brackets or arms a little in the rear of the breech face of the gun.

Model Y has a corresponding part or tray hinged to the breech, a little forward of the rear face of the gun, thus somewhat shortening the mechanism. This I do not regard as a very material difference, but as, perhaps, a slight change in mechanical construction.

The retractor in model Z consists of two arms or levers pivoted to the main pintle which supports the carrier. These arms are connected to the breech plug by being pivoted to sliding pieces which have dovetail engagement with a guide, which is on a ring connected to the breech plug of the gun. In model Y the breech-retractor is pivoted on a pin or pintle which is connected to the carrier tray, and not to the breech pintle proper. The end of this arm is connected to the breech plug by a pin entering an under-cut groove in the block. The connection of the retractor to the breech is much more direct in model Y than in model Z. The forward movement of the retractor in model Z, that is, the movement by which the breech plug is closed into the gun, is effected by a stirrup or link connection to a projection from the main pintle; and this stirrup is thrown out of and into engagement by a spring, operating in one direction, and by what amounts to a cam operating in the other direction, there being a lost motion both in opening and closing the breech.

In model Y, I find no such stirrup connection, as the op-
278 eration is effected in a somewhat different manner. In model Z, I find the rack-bar moving in a slideway which is permanently fixed to the breech of the gun proper. This rack-bar is connected by a pitman with a crank arm projecting over the main pintle of the hinge, and has a reciprocating movement with every rotation of the main pintle, except where the crank passes its dead centre. This rack-bar engages the segmental rack on the breech plug, when the breech plug is closed into the gun, and, by its transverse movement across the breech face of the gun gives a rotary movement to the breech plug. When the breech plug is drawn back, in opening, the rack is entirely disengaged.

ferred; but as I have not the Farcot patent now at hand, I cannot at this moment go into the details of construction therein set forth.

Q. Referring to Canet's English patent 9453, of 1888, please explain particularly its bearing on Seabury's claims 1 and 4 in patent No. 425,584, and on the construction you saw at the gun foundry—the Dashiell gun.

A. As I have explained, the construction shown and described in the English patent embodies the broad combination covered by claim 1 in the Seabury patent, and also embodies in a general way the construction embraced in the Dashiell gun, but more nearly resembles the construction of the Seabury than the Dashiell device, for the reason that the retractor in the Canet device acts from a fixed centre as does the Seabury, while the retractor in the Dashiell device acts from a moving centre, when said retractor is in operation to carry the breech block either into or move it out of the carrier.

Q. Make a similar explanation of the Farcot English patent of 1887.

A. That is the one I have not at hand.

Q. Give a similar explanation of the Nordenfelt patent, 7195, of 1887, on the Seabury and Dashiell construction.

A. The Nordenfelt construction, as I have explained, em-
276 bodies every feature set up in Seabury's claim 1 or 4, when interpreted in any manner as broad or generic claims. The Nordenfelt construction has the rack-bar, which rotates the breech block on its centre attached to the breech of the gun, and it remains in its sliding way on the breech of the gun. The corresponding device in the Seabury construction has a similar location and similar operation, and also remains on the gun. In the Dashiell device the sliding rack-bar is located in the carrier, moves with the carrier, and has not only the function of turning the breech on its axis, but also serves as a fulcrum against which the lever acts in opening the breech. The Seabury device is the precise mechanical equivalent of the Nordenfelt device; whereas the Dashiell device so far referred to is not precisely the mechanical equivalent, but has other and further functions. As I explained, the Dashiell retractor is not the Nordenfelt retractor, whether it be or be not the mechanical equivalent thereof. In all substantial respects of construction, so far as the elements of Seabury's claims 1 and 4 are concerned, the Seabury device is much more nearly like the device described by Nordenfelt than is the Dashiell device like either that of Seabury or Nordenfelt.

Adjourned to meet tomorrow, the 25th inst., at 10 o'clock a. m.

WASHINGTON, D. C., *March* 25, 1893—10 o'clock a. m.

Met pursuant to adjournment.
Present on behalf of the complainant-, Mr. Wilson.
Present on behalf of the defendants, Mr. Phillips.

Whereupon direct examination of WALLACE A. BARTLETT is continued.

By Mr. PHILLIPS:

Q. Please examine Exhibit Y and state wherein you find resemblances to and differences from Exhibit Z.

A. The model Exhibit Z, which I have testified is a fair representation of the Seabury patent, concerns the breech opening and closing mechanism, has a mutilated-screw breech
277 block, common to all this class of guns. As compared with model Y, I find a slight difference, in that model Y has four segments cut away, whereas the model Z has three segments cut away. This would make no great difference in the operation of the device, except that in locking, model Y needs to be turned through a somewhat smaller arc, and the same is true as to unlocking.

Model Z has the supporting tray in which the plug is drawn, in opening the breech, hinged to a pintle, which is supported on brackets or arms a little in the rear of the breech face of the gun.

Model Y has a corresponding part or tray hinged to the breech, a little forward of the rear face of the gun, thus somewhat shortening the mechanism. This I do not regard as a very material difference, but as, perhaps, a slight change in mechanical construction.

The retractor in model Z consists of two arms or levers pivoted to the main pintle which supports the carrier. These arms are connected to the breech plug by being pivoted to sliding pieces which have dovetail engagement with a guide, which is on a ring connected to the breech plug of the gun. In model Y the breech-retractor is pivoted on a pin or pintle which is connected to the carrier tray, and not to the breech pintle proper. The end of this arm is connected to the breech plug by a pin entering an under-cut groove in the block. The connection of the retractor to the breech is much more direct in model Y than in mo lel Z. The forward movement of the retractor in model Z, that is, the movement by which the breech plug is closed into the gun, is effected by a stirrup or link connection to a projection from the main pintle; and this stirrup is thrown out of and into engagement by a spring, operating in one direction, and by what amounts to a cam operating in the other direction, there being a lost motion both in opening and closing the breech.

In model Y, I find no such stirrup connection, as the op-
278 eration is effected in a somewhat different manner. In model Z, I find the rack-bar moving in a slideway which is permanently fixed to the breech of the gun proper. This rack-bar is connected by a pitman with a crank arm projecting over the main pintle of the hinge, and has a reciprocating movement with every rotation of the main pintle, except where the crank passes its dead centre. This rack-bar engages the segmental rack on the breech plug, when the breech plug is closed into the gun, and, by its transverse movement across the breech face of the gun gives a rotary movement to the breech plug. When the breech plug is drawn back, in opening, the rack is entirely disengaged.

In the model Y, I find the rack-bar, which moves in the slideway in the tray, and is guided by a segmental gear on the main operating lever, the teeth of which gear engage the vertical teeth on the bar, while the horizontal rack-teeth on the bar engage a segmental gear on the breech block. One of the screw-segments of the breech block has a longitudinal channel, with which one tooth of the sliding rack bar is always in engagement, except when the other teeth of the rack-bar are in engagement with the segmental rack. Thus the sliding rack-bar on model Y is always in engagement with the breech plug, and swings away from the gun when the breech is opened.

The operating lever of model Z is pivoted to a pintle projecting downwards from a point in front of the breech face of the gun, and the grooved rack of this lever engages the pinion on the main pintle, and so operates all the breech opening and closing mechanism, including the carrier, retractor, and rack-bar.

In model Y the lever is pivoted to a pin or pintle, which projects through the slot in the tray or carrier, and terminates in the segment gear which engages the sliding rack before referred to. The fulcrum of the lever appears to be the sliding rack, and is, therefore, a movable or moving fulcrum instead of a permanent fulcrum, as in model Z.

I find that in model Y the parts required to open, close and lock the breech, are considerably less in number than in model Z.

279 In model Z there is a pulley attachment which apparently has no function, and I have not before referred to it. Both models have about the same kind of a locking catch to hold the loading tray in closed position. This locking catch is referred to in the Seabury patent as being an old device. Model Z has a locking catch to hold the loading tray in open position and model Y has no such catch.

These, I believe, are the differences and resemblances of mechanism embodied in these two exhibits.

Q. Make a similar comparison and statement as between Exhibit Y and the Nordenfeldt English patent, No. 7195, of 1887.

A. The Nordenfeldt patent No. 7195, of 1887, is for a gun having a mutilated screw-breech, with a carrier or tray into which the breech plug is moved in opening, the said carrier or tray being hinged to a pivot or pintle, supported in brackets extending from the breech of the gun. This pintle is operated by a lever connected thereto and having a crank arm engaging the sliding rack-bar, which is secured to the breech of the gun, and engages the rack-tooth on the breech plug to give rotation to the plug on its axis. The breech-retractor consists of an arm connected to the main pintle and extending under the carrier, said arm having a slot which engages a pin extending downward from a collar on the breech block and through a slot in the carrier. If the breech be closed, it is opened by swinging the lever, which operates a sliding rack-bar and rotates the block on its center, the retractor at such time being allowed to remain idle or inert, by reason of a device, which the inventor calls a bolt, being at this time out of engagement with the operating pro-

jection on the retractor. As soon as the breech is unlocked the retractor is thrown into operation and carries the plug to the rear on the carrier. When the breech plug reaches the extreme of its rear movement, a further movement of the lever moves the retractor, carrier and plug together and swings them to one side. I do not find in the Nordenfelt patent any description of a locking catch to hold the tray in engagement with the breech of the gun.

280 In model Y the operation of the breech in unlocking is effected by the first movement of the levers, thrusting the rack-bar to one side and causing the breech to rotate until it is unlocked; and then a further movement of the lever presses the pin by which said lever is connected to the retractor, to one side, thus drawing back the retractor and the breech plug into the carrier, and a further continuation of the same movement swings the plug and carrier to the rear.

Thus, I find the operation of the Exhibit Y to be similar in many respects to that of the device described in the Nordenfelt patent, but the mechanism is somewhat simpler and the connections more direct.

Q. Please explain the bearing of English patent 3402, of 1887 (Farcot), to Seabury's claims Nos. 1 and 4.

A. English patent No. 3402, of 1887, shows substantially the subject-matter of claim 1 in the Seabury patent. The English patent states:

"This invention relates to apparatus so arranged that by the rotation of a single axis the successive movements necessary for introducing or withdrawing the breech block of a breech-loading gun are performed with ease, rapidity and exactness, as will be described with reference to the accompanying drawing."

In this patent, which described a mutilated-screw breech plug, there is a vertical pintle a little to one side of the breech of the gun, in a position almost exactly corresponding with the model Z and further to the rear than that of model Y. This pintle has a worm gear wheel, marked "1" in the drawings, which engages the segmental rack on the breech block, and also engages a longitudinal rack which is parallel with the side of the cut-away portion of the screw of the breech. The main pintle supports a carrier or tray in substantially the same manner as the model Z, and differing but little in function from the corresponding function in model Y. The rotation of the pintle by a lever connection, which is described, but not shown, causes the worm wheel to rotate the breech plug

281 in unlocking, and a continuation of the movement carries the breech plug to the rear into the tray, and a further continuation swings the tray and breech block to one side.

In this English patent, I thus find "A combination with a breech-loading cannon and the breech block for the same, which is withdrawn in the rearward direction, with a breech-block carrier hinged to the breech, and a breech-block retractor (being the part marked '1' in the drawings) hinged to the breech, separate from said carrier and moved independently of said carrier to throw the breech block into and push it therefrom, but capable of moving with said

carrier when the block is therein;" in the terms of Seabury's first claim, omitting the final words of said claim.

I do not find a direct answer to the fourth claim of the Seabury patent, although in my opinion the toothed gear, "1," of the Farcot patent, is the mechanical equivalent of the toothed rack described in claim 4 of the Seabury patent.

I do not find a greater resemblance in the structure described in the British patent referred to, to the model Y than to the model Z.

Q. In your opinion, does or does not the Seabury claim 1 cover such a construction as that of Exhibit Y, and give the reasons for your opinion.

A. Seabury claim No. 1, if it were interpreted broadly, would, in my opinion, cover such a construction as that of the model Y; but in view of the patents to which I have referred, and especially the Nordenfeldt patent No. 7195, such claim is incapable of a broad interpretation, because when so construed it covers these other devices. Farcot, Canet and Nordenfeldt all show constructions to which the terms of claim 1 would apply as well as they do to the Seabury construction, and hence, under a well-known rule of law——

Mr. WILSON: I object to the witness testifying as to the law.

The WITNESS: That a claim should be construed favorably to sustain and not to avoid it, I am of the opinion that the
282 Seabury claim No. 1 must be construed strictly in accordance with the description in the specifications, and by the last clause in the claim "substantially as set forth;" and when so construed, said claim of Seabury does not cover the construction of the Exhibit Y, which is practically the same as the gun I saw at the navy yard.

Q. In your opinion does the gun you saw at the navy yard correspond to claim 1 or claim 4 of the Seabury patent; and state your reasons for the opinion you have formed.

A. The gun I saw at the navy yard corresponds practically with model Y, and the same opinion applies to the gun as to the model. As to Seabury's claim 4, as I have heretofore endeavored to explain, said claim can only be construed to cover such a construction as the model Y when interpreted by the doctrine of the equivalents. On its face the claim does not directly apply to the model Y. In view of the Nordenfeldt English patent No. 7195, I am of the opinion that no possible interpretation can be given to claim 4 of the Seabury patent, which will cause it to cover the model Y without also causing it to cover the antecedent patent of Nordenfeldt. I am therefore of the opinion that the Seabury claim No. 4 does not cover the construction of model Y, or of the gun I saw at the navy yard.

Cross-examination.

By Mr. WILSON:

Q. The three models to which you have referred in your direct testimony, designated models X, Y and Z, are made on different scales; that is, they are different sizes, are they not?

A. I do not think I referred to model X at all. I have not examined it.

Q. The three models which are here present, and which are designated X, Y and Z, to one or more of which you have referred in your testimony, and which I now show you, are of different sizes, are they not?

A. Yes.

Q. No two being on the same scale?

A. They are of different sizes.

283 Q. Can you state, from an inspection of them, whether the breech plug shown in each of the respective models bears the same proportion in length and diameter to the bore of the model itself?

A. I think they do not.

Q. Model X represents a plug fitted with a De Bange gas check; does it not?

A. I have not examined model X and have not familiarized myself with its construction.

Q. Do you know the De Bange gas check; that is, have you ever seen it?

A. Yes; I think I allowed the patent on it.

Q. Are you able to say, from your present observation of it, whether it is designed to show a De Bange gas check attached to the breech plug?

A. I could not say whether it is a De Bange gas check or not. I have passed several others, very similar to it.

Q. Does it represent either the De Bange gas check or one very similar to it, attached to the breech plug, in your opinion?

A. I think it is intended to show something like the De Bange gas check.

Q. Does model Z appear to represent a similar gas check; that is, the De Bange or one of the same general proportions?

A. Apparently it represents something quite similar to the De Bange gas check.

Q. Is there any such element in model Y?

A. There is none.

Q. Is it not a fact that a breech plug, carrying a gas check such as the De Bange, is very considerably lengthened by the addition of that gas check?

A. It is a fact.

Q. Is it not also a fact that the longer the breech plug and gas check the longer it is necessary to make the withdrawing tray or other supports?

A. Ordinarily such would be the case.

Q. Is it not also ordinarily the fact that when such is the case, the structure to the rear of a gun of such mechanism must

284 occupy more space than if such gas check were not used?

A. Yes.

Q. Is it not also true that in order to accommodate the swing of the block, prolonged by the addition of such a gas check as the De Bange, the pintle or hinge on which the breech plug is sup-

ported and swung to one side is necessarily further removed from the breech of the gun than where no gas check is attached to the breech plug?

A. Ordinarily such would be the case.

Q. Does not Exhibit Y show a breech plug of greater diameter and less depth than Exhibit Z, in proportion to the bore of the gun represented?

A. Without measuring it, I should say it does.

Q. Do you know whether or not it is a scientific fact that by enlarging the diameter of the breech plug within certain limits the depth of the plug may be lessened without loss of strength, for the purposes which the plug serves?

A. I do not know that such is a conceded fact.

Q. Have you any opinion on the subject?

A. I think it might be so.

Q. Is that as positive as you are willing to be?

A. Yes.

Q. State whether or not, in your opinion, if model Z showed a breech bearing of the same proportion to the gun, the breech of which it represents, as the plug to model Y bears to the gun which it represents, the pintle, as you have called it, on model Z, might not have been placed much nearer the breech of the gun without interfering with the efficiency of the mechanism.

A. I think it might have been.

Q. And in such event, the tray and other parts projecting to the rear of the gun might have been brought proportionately nearer?

A. Certainly.

Q. In speaking of model Y you said that it had no locking catch for the opening, by which you mean the withdrawn position of the breech plug, did you not?

A. I think so.

285 Q. That is a fact, is it not?

A. I do not find any such catch.

Q. Do you regard such a catch as essential or non-essential?

A. It would depend upon the use to be made of the gun. For land service I should say it was not at all essential. Possibly, it would not be essential for sea service; and then again it might be required.

Q. The gun which you saw actually constructed, in form substantially the same as model Y, was a gun constructed by the Navy Department, was it not?

A. I so believe.

Q. You saw it at the navy-yard shop in this city of Washington?

A. I did.

Q. Why would it be more important to have such a check for sea service than for land service?

A. I do not know that it would be. I am not familiar with the use of guns at sea, and I am with the use of guns on land.

Q. Is that the only reason why you made the distinction in your previous answer?

A. It was a mere surmise of mine that it might be needed.

Q. Do you have any further surmise than the fact that you are not familiar with the use of guns at sea?

A. I was sufficiently familiar with the use of guns under all circumstances to know that at sea the rolling of the ship might make it unpleasant for the gunner if there was no way of securing the breech in open position; that is, I think it might be so.

Q. State whether or not in your opinion the mechanism shown by model Y could be satisfactorily and safely operated if one side or the other of the gun were very much depressed momentarily by the rolling or other motion of a vessel.

A. It would depend upon the amount of the roll. In my
286 opinion the mechanism would always work more easily when the pintle is in vertical position. I should think it might shift considerably from that position and still be operative.

Q. Does not the design shown by model Y depend largely upon the force of gravity operating upon the breech plug, to retain the breech plug in proper position during the opening and closing of the breech?

A. By proper position do you mean on the tray? I do not understand the question.

Q. I mean the proper position for the proper performance of the functions it is intended to perform.

A. If I understand your question, I do not think the position of the plug with reference to the other parts is largely dependent upon the force of gravity.

Q. In your direct testimony you mentioned the devices of Shenkl, Cochran, Driggs, Canet, Farcot and Nordenfeldt. How many of these devices have you seen actually affixed to or forming a part of the breech-loading cannon?

A. I could not say. I have seen the Driggs gun; but I could not say it was precisely the same construction as the patents referred to. I saw Shenkl guns in use during the war, but I think they were not the guns described in that patent. I do not think I have seen any of the other guns constructed as described in the patents.

Q. Then it follows, of course, that you have no personal knowledge of any such guns ever having been constructed; does it not?

A. I have no personal knowledge by my own view. I have read——

Q. I am not asking you for that. Do you consider what you have read as personal knowledge of the facts related in the publication that you read?

A. Hardly.

Q. Then you have no personal knowledge of the fact that any guns have been constructed according to any of these devices that you have referred to in your direct testimony, excepting the Dashiel device. Is that the fact?

A. Yes, sir.

287 Q. From what sources have you obtained such acquaintance with the state of the art in regard to which your testimony has been given?

A. I have been somewhat familiar with fire-arms from my boyhood. I served in the army between four and five years during the late unpleasantness with the South, a part of the time as sharpshooter, armed with what was then considered the best gun in the service; but changing to use several improved arms. I have made gun construction a study to a greater or less extent since I left the army in 1867. From 1876 until 1883, I passed upon all, or nearly all, the applications for patents in the United States Patent Office, and hundreds of patents relating to fire-arms were allowed by me. I published a digest of the patents relating to ammunition about 1880, and in 1883 I published a little book——

Q. Is your publishing the source of your acquisition of knowledge?

A. In which I embodied the results of some little research I had made into patent publications relating to weapons of war. I have read largely of the current literature relating to ordnance and gunnery within the past ten years, and have invented and patented some eight or ten devices connected with ordnance, and generally with breech-loading ordnance. In this particular case, I was requested to make a search of the records of the Patent Office and find what I could bearing on the Seabury patent, which I did.

Q. So far as your personal knowledge goes, then, the only means you have of reaching the conclusion that these various devices of Shenkl, Cochran, Driggs, Canet, Farcot and Nordenfeldt, portrayed in the patents to which you have referred, could actually be made and constructed so as to be operated for the purposes for which they are designed, is your scientific knowledge as an expert in such machinery and devices, applied to the description and drawings contained in these patents. Is that the fact?

288 A. I am accustomed to make and have made mechanical constructions and gun constructions from written descriptions; and this experience and information throws a light upon the description in these patents.

Q. Does that knowledge and experience enable you to say whether a gun constructed according to the description and drawings shown in the Shenkl United States patent No. 9943, would be a practically operative gun?

A. It enables me to form a belief in my own mind upon that subject.

Q. You mean that it enables you to form an opinion, but you are not absolutely certain that that opinion would prove correct if the gun were to be actually constructed. Is that the meaning of your answer?

A. That is about it. I think I could form an opinion which I think would be reasonably certain, but I would not pretend to say that I might not be mistaken.

Q. If you were asked the same questions in regard to the other designs shown in the other patents to which you have referred, that is, the Cochran, the Driggs, the Canet, the Farcot and the Nordenfeldt, would you give the same answer?

A. I would.

Q. The same answer applies to all those designs which you have not seen in actual operation?

A. Certainly.

Q. Are you familiar with the Armstrong or Vavaseur patent, either English or American?

A. I have an indistinct recollection of quite a number of Armstrong patents, and once passed upon one or more applications of Vavaseur's; but I think in the latter case they did not relate to breech construction of a gun. I do not recall the Vavaseur construction.

Q. The construction to which I refer is one which opens the slotted screw-block by two motions, that of rotating first, and then that of swinging to the side of the gun, and this is made possible by the fact that the breech plug is of conical form. Do you recall that now?

289 A. Yes; I recollect that construction, but I could not put the name to it.

Q. In the Canet English patent, No. 9453, is not the breech plug there shown of a conical form?

A. It is the frustum of a cone.

Q. It is not cylindrical?

A. No, sir.

Q. What is the purpose of that as shown in this Canet patent, so far as you are able to state?

A. That conical form of breech plug, as I understand it, enables the block or plug to swing back more readily and disengage itself from the gun by a less movement to the rear, and enables the pintle in some instances to be placed further forward.

Q. On these drawings attached to the same patent, what letter indicates what you term the pintle?

A. The letter C.

Q. In your opinion is that form of plug as strong and safe as the cylindrical form?

A. It has been a debated question, I believe. I think I have formed no opinion on the subject.

Q. Are you able to form one now?

A. Hardly, without making some calculations.

Q. Suppose the opposite sides of the conical plug approach one another at an angle of ninety degrees, would you have any doubt, if the cone were one so obtuse as that, on the question of strength and safety as compared with the cylinder?

A. Such a construction would require the cutting away of the gun to an extent which would probably weaken it.

Q. Would that be the only objection to it, in your opinion?

A. It is the only objection that occurs to me at the moment.

Q. In speaking of this same structure shown by this Canet patent upon your direct examination, I think you stated that it had a retractor hinged to the breech. Do you mean to be so understood?

290 A. I don't remember the exact language I used, but I think it might bear the construction of a retractor indirectly hinged to the breech.

Q. Please point out on the diagram the hinge of the retractor to which that description would apply, and state by what letter it is indicated.

A. I think it is the letter "*c*."

(The witness being in doubt about the letter on the diagram, makes upon the drawing an "*x*" mark, indicating the pivot of the hinge.)

Q. Does not that part which you have marked, and which is a circle shaded, indicate the pin by which the breech plug is withdrawn from the bore?

A. Yes; it does. I consider this one of the constituent elements of the hinge. While acting as a hinge the arm, which I now mark "*y*," swings to one side; the roller "*i*" enters the groove "*h*," and, as the specification states, strikes against the extremity of said groove. The roller "*i*" then becomes the pintle of the hinge, and the arm extending from "*i*" to "*h*" the leaf of the hinge; and this leaf swings to the rear on the roller "*y*" as a centre, carrying whatever is attached to said leaf with it. In this case the pivot "*c*" and its attachments.

Q. During the time when the retractor is in operation and is actually drawing back the plug, through the connection "*c*," or, as you have marked it, "*x*," does the pin "*i*" remain stationary or is it moving?

A. If it comes to a bearing in the groove "*h*" it must remain stationary.

Q. And in that way, in your opinion, it is connected permanently with the breech through the line "B," during the process of withdrawing?

A. The part "B" is described as a bracket, and, as I understand it, is connected to the tray.

Q. The reason for stating that the retractor may be said, with propriety, to be hinged to the breech is this: That "*i*" having reached "*h*" it becomes permanently fixed there, while the
291 withdrawing process is going on and being so permanently fixed during that process, is the same as if it formed a part of the structure "B," which is hinged to the breech "C"?

A. That is my understanding of the structure.

Q. And if "*i*" did not remain stationary at "*h*" during the withdrawing, but moved back and forth, would you then say that this retractor shown in this design was hinged to the breech?

A. I think I would say that it was indirectly hinged to the breech.

Q. You used the word "hinged." Do you mean to define an immovable fulcrum or one which is traveling?

A. I think either term may be properly applied. There is a great variety of hinges. The hinge I have in mind, and with which we are all familiar, is a blind or door hinge, in which the pintle is sometimes in its bearings and sometimes swings out.

Q. In your best judgment, from your examination of this English Canet patent No. 9453, and the drawings attached to it, would the mechanism constructed in conformity with that description and

those drawings be a practical and operative mechanism for the purpose of performing the function which the patent states the mechanism is intended to perform?

A. I think it would be an operative device, if constructed by a skilled mechanic, with no other information than that contained in the patent and that which a skilled mechanic is supposed to have.

Q. And without departure from the forms shown by the drawings and the description given by the text of the patent. Is that true?

A. Without departure from the ideas of construction. I presume the drawing is not made to scale. I have very seldom known a Patent Office drawing to be made to scale.

Q. I ask you the same question in regard to the Nordenfeldt patent, No. 7195.

A. I would give the same answer.

292 Q. Have you any doubt in your own mind on the subject?

A. I have not. I feel quite certain I could make an operative device from the drawings and description in the Nordenfeldt patent, and I am not much of a mechanic either.

Q. Referring to the English patent of Farcot, No. 3402, and the drawings attached to it, state whether the design there shows the means employed for rotating the pintle "*k*"?

A. The drawing does not show the operating handle.

Q. How many revolutions of the worm wheel "*l*" would be required to perform the whole of the three motions of rotating the block, withdrawing it to the rear and swinging it to the side of the gun?

A. I think something less than one revolution.

Q. On what do you found that belief?

A. On the description contained in the specifications. I wish to say, however, that I have not read the Farcot patent with the same care that I have the other patents to which I have refefred, as the copy was not at my command, and I do not speak as positively with regard to the mechanical construction and operation thereof as I do with reference to the others.

Redirect examination.

By Mr. PHILLIPS:

Q. I understand that on cross-examination you testified that the Nordenfeldt English patent No. 7195, described an operative device. Could you construct an operative gun from the description you have there; and if not, what changes, if any, would you make?

A. I think I could construct an operative gun from the description as given, putting in, of course, such essential elements as are well known to gun-constructors, such as a gun barrel where it is required, a gun carriage if required. I might add to the description a catch to hold the tray to the breech of the gun, such being well known in the art, and I might, perhaps, put in the same catch that Mr. Seabury did. Otherwise, I think I would make no change.

293 Recross-examination.

By Mr. WILSON:

Q. Then the changes that you would make would be those of addition, if any, and not of alteration?

A. Simply mechanical additions.

Q. And you are satisfied in your own mind, from your knowledge of the subject, that a gun so constructed would be operative and satisfactorily operative?

A. I am so convinced.

W. A. BARTLETT.

Subscribed and sworn to before me, this 6th day of May, A. D. 1893.

WM. HERBERT SMITH,
Examiner in Chancery.

The further taking of these depositions was thereupon adjourned until 2 o'clock p. m.

WASHINGTON, D. C., *March* 25, 1893—2 o'clock p. m.

Met pursuant to adjournment.

Present on behalf of the complainants, Mr. Wilson.

Present on behalf of the defendant, Mr. Phillips.

Counsel for the defendant thereupon offered in evidence certified copies of letters patent of Great Britain, as follows, to wit:

To Joseph Farcot, No. 3402, dated March 5, 1887.

To J. B. G. A. Canet, No. 7434, dated March 28, 1888.

To John Fielding, No. 14602, dated Oct. 11, 1888.

To H. R. Whinfield and James Horne, No. 15188, dated October 23, 1888.

To Thorston Nordenfeldt, No. 7195, dated May 17, 1887.

294 To J. B. G. A. Canet, No. 7434, dated March 28, 1888.

To Albert Sauvé, No. 9813, dated July 12, 1887.

To Albert Sauvé, No. 9453, dated July 4, 1887.

Counsel for the defendant also offers in evidence United States letters patent as follows, to wit:

To Shenkl & Saroni, No. 9943, dated August 16, 1853.

To J. W. Cochran, No. 26256, dated Nov. 29, 1859.

To Wm. F. Goodwin, No. 43310, dated June 14, 1864.

To Driggs & Schroeder, No. 360,798, dated April 5, 1887.

To T. Nordenfeldt, No. 384,537, dated June 12, 1888.

All for improvements in breech-loading ordnance.

PHILIP T. DODGE, a witness of lawful age, called by and on behalf of the defendant, having been first duly sworn, is examined.

By Mr. PHILLIPS:

Q. State your name, age, residence and occupation.

A. My name is Philip T. Dodge; I am 40 years of age; I reside in New York city and Washington city: by occupation I am an

attorney and expert in patent matters, and I am also engaged in the manufacture of machinery.

Q. What experience, if any, have you had in connection with mechanical matters and patents?

A. I have been familiar with mechanical matters from boyhood. I received a training in machine drawing and construction in my younger days, and made many mechanical drawings. I have prepared and prosecuted many hundreds of patents relating to a great variety of subjects, particularly to mechanical and electrical structures and chemical apparatus and processes. I have had occasion to visit and carefully investigate the operations carried on in factories and shops devoted to a great many different industries, both in America and in Europe. I have had very frequent occasion for upwards of fifteen years to consider and compare patents and patented structures. I have myself made numerous inventions. I have frequently been called in consultation in me-
295 chanical matters, and have acted as expert in such matters before the courts and elsewhere. I am now the president and general manager of a manufacturing concern employing several hundred men, engaged in the construction of expensive and complicated machinery, and have the exclusive control of the operations carried on therein.

Q. Can you mention any cases in which you have been employed as an expert?

A. I have been employed as an expert in cases relating to grain, harvesting and binding machinery; in relation to the manufacture of creosote and allied products; in regard to grain drills and seeders, and in cases relating to file-cabinets, manufactures of metal articles and many other cases relating to different subjects. I refer now only to cases before the courts.

Q. Have you examined any breech-loading guns known as the Dashiel gun at the United States gun foundry in Washington?

A. I have.

Q. How does the model Y compare in mechanism with the gun that you have examined?

A. This model fairly and accurately represents the mechanism of the Dashiel gun as I examined it at the United States gun foundry in the Washington navy yard. Certain parts, such as the firing mechanism, are omitted from this model.

Q. Have you examined and do you understand the Seabury patent No. 425,584?

A. I have examined the Seabury patent and believe that I have a full understanding of the same.

Q. How does the model Z compare in construction and operation with that set out in the Seabury patent?

A. I have examined the model in question and believe it to be a fair representation of the breech mechanism disclosed in the Seabury patent.

Q. Describe the nature of the Seabury invention as set forth in claims 1 and 4.

296 A. The Seabury invention deals with that old class of breech-loading guns in which a breech plug or block provided with a mutilated screw-thread to hold it in place in the gun, is given a partial rotation in order to unlock these threads, and then withdrawn axially in a rearward direction from the breech of the gun onto a supporting carrier, and finally swung around horizontally with the carrier away from the gun, in order to expose the breech opening that the cartridge may be inserted.

The primary object of the inventor, as set out in the patent, is to provide a mechanism by which, through a single movement of an operating lever, the three motions above mentioned may be imparted to the breech block. The first claim of the patent relates to a specific combination of parts—less than the whole combination of the gun—for withdrawing the breech plug from the gun to the hinged carrier and swinging said carrier, with the breech plug thereon, away from the gun. It is, in brief, for a combination of the breech-block carrier or support, hinged to the breech, and a breech-block retractor hinged to the breech separate from said carrier and movable independently thereof, in order to draw the breech-plug rearward upon the carrier or push it therefrom into the gun as demanded. The so-called carrier is hinged to the breech of the gun to swing horizontally, and stands, normally, in such a position that when the breech plug is withdrawn it slides upon the carrier, which receives its weight. The retraction of the plug is effected by horizontally swinging arms, having an axis coincident with that of the carrier. These retracting arms swing rearward, while the carrier is at rest, in order to place the breech plug upon the latter, after which the carrier and retractor swing rearward and laterally together around their common axis and take the plug away from the breech.

It is this hinging of the retractor arms for withdrawing the plug, and the hinging of the carrier which supports the plug so that they may swing either successively or in unison, that constitutes
297 the subject-matter of the first claim. The claim does not, in terms, include any mechanism for rotating the breech block to disengage or unlock its threads, or any mechanism for operating either the swinging retractor arms or the swinging carrier. In terms, therefore, the combination is an incomplete, inoperative one; but in the light of the specification, I think it perhaps reasonable that we should read into the claim, by implication, the necessary operative devices set out in the specifications.

The fourth claim relates to a specific combination of mechanism for rotating the breech plug, to unlock it, with means for supporting the plug after its retraction. It includes, outside of the gun proper, only the carrier or support to sustain the plug when withdrawn, and the means for rotating the plug to unlock it. It does not include any mechanism for withdrawing the plug after it is unlocked, or for swinging either the plug or the support away from the gun. So far as anything recited in this claim is concerned, it would be necessary, in operating the gun, to perform several distinct and independent manual operations in opening and closing the breech.

Q. State whether or not Seabury was a pioneer in the art, and the first to produce a gun with mechanism having the function and general mode of action set out in Seabury patent claims Nos. 1 and 4.

A. Seabury was not a pioneer in the art in any sense of the word. He dealt with a type of breech mechanism which was very old and very common in the art. The result which he sought to attain, namely, the threefold movement of the breech block by a single movement of an operating lever, had been attained by various inventors at an earlier day. Indeed, the mechanism which Seabury adopted possesses very little novelty even as to its minor details. The Seabury patent is grossly misleading in its statement of the prior art. The patent says:

"In such a gun there are three movements necessary to open the breech—namely, first, the turning of the breech block to unlock it; second, the withdrawal of the breech block backward into
298 the receiver; and, third, the swinging aside of the receiver with the breech block in it. These three movements have hitherto been separately performed by hand, the breech block having been first turned to unlock it by hand and then pulled back by hand into the receiver, and the receiver then having been swung aside by hand, with the breech block in it, to open the breech."

As a matter of fact, this was not the state of the art at the time of the Seabury patent. The art had advanced far beyond this point, and mechanism for effecting the three movements of the breech plug had been produced by other patentees. In Fielding's British patent No. 14602, dated October, 1888, the patentee says:

"In order to open the breech it is first necessary to turn the breech block far enough to disengage the threads, bringing those on the block opposite the spaces in the breech threads; it is then drawn straight out until it can be swung out of the way into the hinged tray or ring."

"According to this invention, these three movements are performed by turning the winch handle continuously in the same direction, from the commencement of the first until the completion of the last movement, and the reverse movement of the handle causes the block to be replaced and secured."

British patent to Canet No. 7434, March 28, 1888, shows another mechanism through which a continuous movement of the operating devices effect the unlocking and withdrawal of the breech plug.

In British patent to Farcot, March 5, 1887, No. 3402, the patentee says:

"This invention relates to apparatus so arranged that by the rotation of a single axis the successive movements necessary for introducing or withdrawing the breech block of breech-loading guns are performed with ease, rapidity and exactness."

The specifications and drawings disclose mechanism by which the threefold movements of the breech, before mentioned,
299 are automatically effected by the continuous rotation of an operating handle.

British patent to Sauve, No. 9453, dated July 4, 1887, also shows

another mechanism for rotating the breech plug, withdrawing the same upon a supporting carrier, and swinging the carrier and block to one side, all performed automatically and by one operation. The patentee says:

"The invention has for its object improvements in apparatus for working the breech mechanism of guns known as the French interrupted-screw system. For this purpose I have devised an arrangement by which the various operations are effected by means of an ordinary hand lever."

There are also various other patents in which the operations are performed automatically and by a continuous operation, the motive power being supplied by hand levers, in some instances, and in others by hand cranks, and in still others through wheels operated by hydraulic mechanism, these motive devices being well recognized in the art as mechanical equivalents, which the skilled mechanic could substitute one for another.

The nearest approach, however, to the Seabury structure is to be found in British patent to Nordenfeldt, No. 7195, dated May 17, 1887. This structure is, to all intents and purposes, so far as the devices for turning, withdrawing and swinging the breech are concerned, the same as the Seabury structure. The patentee (Nordenfeldt) says:

"This invention relates to breech-loading guns in which the breech is closed by the block entering the breech opening, and having spaced screw-threads upon it engaging with corresponding spaced threads within the breech of the gun. In such guns I give all the necessary movements to the breech block by means of a lever handle and axis, rotating through an arc of a circle."

It is because of the existence of such earlier patents that I am of the opinion that Seabury was not a pioneer, and that he must be considered, at best, as a mere modifier of minor details of the
300 earlier structures. Everything which he accomplished had been accomplished by those before him, and by mechanisms of an equivalent character, having the same advantages.

Q. Is the statement of the prior state of the art contained in Seabury's patent, correct or incorrect?

A. The statement of the prior art contained in the Seabury patent is incorrect and misleading in that it ignores the existence of the earlier patents disclosing precisely such structures as he claims to have been the originator of.

Q. State, for the information of the court, the state of the art prior to the Seabury patent, so far as it bears on his invention.

A. I have already given this in part. As indicating the nearest approach to the Seabury structure, in fact I may fairly say as indicating the want of any substantial novelty in the Seabury structure, so far as the handling of the breech block is concerned, I would first call attention to the Nordenfelt British patent No. 7195, of 1887. This patent discloses a gun, having a breech plug provided with mutilated threads, a carrier hinged to the breech of the gun to swing horizontally and arranged in such position that when the plug is withdrawn it will be received upon and retained by the carrier. It

also discloses a horizontal hand lever, having an axis coincident with that of the breech-plug support or carrier. It shows a connection from this hand lever to the breech plug of such character that on drawing the lever rearward, its first action is to rotate and unlock the breech plug. It also shows a ring or collar encircling the rear end of the breech plug and connected through intermediate devices with the end of the lever, so that as the movement of the lever is continued, after unlocking the breech plug, the continued movement causes the plug to be withdrawn positively from the breech of the gun to a position on top of the carrier. There are also connections between the axis of this hand lever and the horizontal swinging carrier of such nature, that when the movement of the lever is continued beyond the distance required to effect the first two movements, it causes the third and final movement necessary, that of swinging the carrier, with the plug upon it, horizontally away from the breech of the gun.

301

In other words, a single, continuous movement of the hand lever causes, in proper succession—first, the rotation of the breech plug or block; second, the withdrawal of the plug; and third, the lateral movement of the plug and its carrier. These actions are performed in essentially the same manner as in the Seabury structure, and with precisely the same effect. The reverse movement of the hand lever causes the carrier to swing towards the breech of the gun, so as to present the breech plug in position for entrance, and then advances the plug into the gun, and finally gives it a rotation for the purpose of locking it in place. These actions are also essentially the same, and of precisely the same effect as the corresponding movements effected by the hand lever in the Seabury structure.

There are, in this Nordenfeldt structure, other and minor parts having no direct influence on the operations above named, and which, therefore, I have omitted to discuss. The specification is full and clear, and sufficient to enable a mechanic to build the gun.

Other and earlier British patents disclose structures effecting the same results as the structure of Seabury, but, as their mechanism is of a somewhat different character, a brief mention will suffice.

The Canet patent, No. 7435, dated March 28, 1888, shows a rotary hand crank and connection, through which a continuous rotation of this crank serves, first, to unscrew the breech block; secondly, to withdraw the plug positively to a position on top of a horizontally swinging carrier; and thirdly, to revolve the carrier, with the plug upon it, away from the breech of the gun.

The Sauve British patent, No. 9453, of 1887, discloses a gun having a breech block with mutilated screw-threads, and a hand lever arranged to swing horizontally backwards, combined with mechanism through which this movement serves, first, to rotate and unlock the breech block; secondly, to withdraw the block and leave it on top of the horizontally swinging carrier; and thirdly, to swing the carrier, with the block upon it, horizontally away from the gun.

302

The patents of Felding, No. 14602, dated October 14, 1888, shows a gun having a breech block with interrupted threads, a horizon-

tally swinging carrier into which the block may be withdrawn, and a hand crank connected with devices through which it serves, by a continuous rotation, to first, rotate and unlock the block; and secondly, to withdraw it from the gun; and thirdly, to swing the carrier and block positively to one side.

The patent of Sauve, No. 93813, dated July 12, 1887, shows another mechanism provided with an operating handle or crank, through which the three operations of rotating the block to unlock it, withdrawing it from the gun to the carrier, and swinging the carrier and block horizontally, are performed in the proper sequence. This patentee also describes and illustrates an hydraulic mechanism which may be used in place of the hand crank to operate the breech mechanism; it being recognized in this patent, as in others, that a given breech mechanism may be operated by motive devices of different forms.

Q. What do you understand to be the invention covered by Seabury's first claim?

A. Briefly stated, Seabury's first claim is for a gun having a breech block which is withdrawn in a rearward direction; a hinged carrier to receive the block when withdrawn, and a hinged retractor to withdraw the block, the retractor being adapted to move independently of the carrier while withdrawing the block, and thereafter to move with the carrier.

In other words, it is for the use of a swinging breech-block support, and a swinging breech-block retractor, adapted to swing independently or in unison, as demanded.

Q. Compare the action of the subject-matter of Seabury's first claim with the English patent of Nordenfeldt, 7195, of 1887.

303 A. So far as the parts recited in Seabury's first claim, and the action of those parts is concerned, they are practically identical with those disclosed in the Nordenfeldt patent No. 7195. I have marked on the Nordenfeldt drawings, in red ink, letters indicating the parts which correspond to and are the equivalents of those bearing like letters in the Seabury patent.

Referring to those red letters, "A" represents the breech of the gun; "B," the breech block; "C," the swinging carrier or support for the breech block; "G" the independently swinging retracting arm by which the breech block is withdrawn from the bore of the gun to a position on top of the carrier; "C^2" is one of the supporting brackets, through which the axis of the swinging carrier "C" passes, and by which it is supported.

These are all of the elements included in the first claim of the Seabury patent, and in the form and arrangement shown in this Nordenfeldt patent they are broadly considered, and so far as the functions recited in the claim are concerned, in my opinion, the full mechanical equivalents of the Seabury devices.

I am of opinion, therefore, that this Nordenfeldt patent discloses the combination of the first claim of the Seabury patent.

There are certain differences in the forms and details of the parts; but those details do not modify essentially the mode of action, and are not carried into or made a part of the Seabury claim, in terms. If,

therefore, the Seabury first claim is to be considered as a broad claim for a breech-block carrier and a breech-block retractor, having independent motion, without reference to their minor details, it is certainly fully anticipated in the Nordenfeldt patent. It must be borne in mind that there is nothing new in the Seabury breech block, or breech-block carrier, or the means for locking the carrier to the breech of the gun. These are distinctly disclaimed by Seabury as being old in the art, in lines 21 to 24, page 2, of his patent.

304 Q. What do you understand to be the invention covered by the fourth claim of the Seabury patent?

A. Concisely stated, it is for a breech-loading gun provided with a swinging breech-block carrier; a spindle which forms a hinge or pivot to said carrier, and a toothed rack in gear with the breech block, and a crank arm. The before-mentioned spindle is connected with the rack. When the lever is moved, it first moves the rack, which in turns gives a slight rotation to the breech block in order to unlock it. The rack is simply the connection between the lever and the breech block, to rotate the latter, and as such connection is simply the equivalent of a link, or any other of the well-known mechanical devices, such as are used for imparting motion from one moving part of a structure to another. It is to be noticed that this claim does not include the means for withdrawing the block from the gun, or for swinging the block and carrier to one side after the block is withdrawn. If, therefore, a gun were constructed with only the devices contained in this claim, it would be necessary, after operating the lever to unlock the block, to perform two other and independent operations by hand; first, to draw the block out of the gun, and, secondly, to swing the block and carrier away from the breech. The claim does not contain either in terms or by implication any means whatever for performing these two additional operations. It may be said, therefore, to be, so far as any improvement is concerned, simply a claim for a lever-connection to rotate the breech block.

Q. Was this device, in your opinion, new at the time of the Seabury patent?

A. This combination is met not only in terms, but in substance, by what is disclosed in the Nordenfeldt patent No. 7195, of 1887. In that patent, I have marked with red letters the parts corresponding to those of the fourth claim of the Seabury patent. As marked in red, "A" represents the breech-loading cannon; "B" the breech block which is locked and unlocked by turning it in the breech; "C" the swinging breech-block carrier hinged to the breech;

305 "D" the spindle which forms the pivot of the hinge to said carrier; "*a*" the toothed rack geared with the breech block; "E" the crank arm on the spindle connected with the rack to produce the turning of the breech for turning and unlocking it.

The construction arrangement and operation of these several parts is mechanically identical in the two structures.

I have not failed to note that in the Seabury patent the rack is provided with a number of teeth engaging a number of teeth in the

breech block; but this is an immaterial difference and a detail which is to be regulated by the skill of the intelligent mechanic, who will apply one or more teeth according to the size of the gun and the exigencies of the case. The connecting bar between the lever and breech block is, in each case, a mere connection for imparting motion from one to the other. Its effect and its mode of action are practically the same in both cases.

I am, therefore, of opinion that the subject-matter of the fourth claim of the Seabury patent is fully and clearly disclosed in the Nordenfeldt patent. In my opinion, the drawings and specifications of this Nordenfeldt patent are quite sufficient to enable any skillful mechanic to construct the gun therein described.

Q. Compare the action of the matters stated in Seabury's fourth claim with that of any earlier devices that you may consider as the equivalent?

A. The action of the devices named in the Seabury fourth claim is, to all intents and purposes, identical with the action of the corresponding parts which I have lettered in red in the Nordenfeldt patent No. 7195. That is to say, the rearward movement of the horizontal lever serves in each case to move endwise a rack-bar which engages and turns the breech block to unlock it. It is to be observed that in the Seabury fourth claim, the devices for rotating the spindle do not enter into the claim. The hand lever of Nordenfeldt serves to rotate the spindle. Such is also the case with the hand lever of Seabury. The connection between the lever and spindle differ in the two cases. As, however, these connec-
306 tions are not brought into the claim, these differences are immaterial, as they do not in any manner affect the function or action of the parts which are claimed.

Q. In your opinion does the Dashiel gun, as seen at the ordnance foundry, contain the subject-matter of Seabury's claim No. 1?

A. The Dashiell gun, as examined by me in the navy yard, and as represented in Exhibit Y, differs materially in the details of its mechanism from the gun set forth in the Seabury patent. The several parts differ materially in form, arrangement and mode of action, the Dashiell structure being simpler and more compact than that of Seabury's. If the Seabury claim No. 1 is to be construed in the light of the prior art it must be so limited, in my opinion, that it will not include the structure shown in the Dashiel gun. In my opinion, if the claim of Seabury is to be considered sufficiently broad or generic in its character to cover the Dashiel gun, it will be fully anticipated by the Nordenfeldt patent.

Q. In your opinion, does the Dashiell gun, as seen at the ordnance foundry, contain the subject-matter of Seabury's claim No. 4?

A. In my opinion Seabury's claim No. 4 can only be construed or considered as including the subject-matter of the Dashiell gun by giving it an interpretation so broad that it would include what is shown in the earlier patents of Nordenfeldt. If this claim is to be interpreted so as to avoid the Nordenfeldt patent, it must be read as having reference to the particular form and arrangement of the

toothed rack, the crank arm and the spindle showed in the Seabury patent. These details are not found in the Dashiell structure.

Q. Please examine the patent of R. B. Dashiell, No. 468,331, dated February 9, 1892, and state how the mechanism therein shown for rotating, withdrawing, supporting and laterally swinging a breech block compares with that shown in the defendant's model Exhibit Y.

307 A. I have compared the patent and model in question and find that the model is a fair representation of the mechanism disclosed in the patent.

PHILIP T. DODGE.

Subscribed and sworn to before me this 6th day of May, A. D. 1893.

WM. HERBERT SMITH,
Examiner in Chancery.

The examiner is requested to note that the model referred to in these depositions as Exhibit "X" is the same which, in the taking of the deposition of Edward T. Tippett, on February 23, 1893, was marked, for identification, Exhibit "B."

The model Exhibit "Y" is the same which, on the same examination of the same witness, was marked, for indentification, Exhibit "A."

Counsel for the defendant thereupon offered in evidence a copy of the patent to R. B. Dashiell of February 9, 1892, No. 468,331.

The further taking of these depositions was thereupon adjourned subject to notice.

308 In the Circuit Court of the United States for the District of Maryland. In Equity.

JAMES B. M. GROSVENOR *et al.*, Complainants,
vs.
ROBERT B. DASHIELL, Defendant.

Deposition on behalf of the defendant, taken by stipulation at Washington, D. C., October 21, 1893, by Mina G. Olcott, who, it is agreed by the parties, may act as commissioner in that behalf.

WASHINGTON, D. C., *October* 21, 1893—2 o'clock p. m.

Present on behalf of the complainants, William G. Wilson, Esq.
Present on behalf of the defendant, S. F. Phillips, Esq.

Whereupon O. H. WORSEY, a witness of lawful age, called by and on behalf of the defendant, having been first duly sworn, is examined.

By Mr. PHILLIPS:

Q. Mr. Worsey, state what is your business.
A. Mechanical draftsman, in the navy yard, Washington, D. C.
Q. How long have you been there?

A. Four years.

309 Q. What do you have charge of in your business?

A. As draftsman, principally breech mechanism.

Q. Will you take that paper that is before you there—what is that, what does it purport to be?

A. It is the specification of the Nordenfeldt breech mechanism as shown by the English patent of Nordenfeldt, No. 7195, under application dated May 17, 1887.

Q. Have you seen that before?

A. Yes, sir.

Q. When and where, and for what purpose?

A. I had it down at the navy yard to make a model similar to it, I should say about January or February last.

Q. Mr. Worsey, what became of the drawings?

A. They went through the regular channels to the chief draftsman and were then issued to the workshop.

Q. Were those drawings in accordance with that specification?

A. Yes, sir.

Q. Accurate representation of the specification?

A. Yes, sir.

Cross-examination.

By Mr. WILSON:

Q. Who directed you to make those working drawings?

A. The chief draftsman.

Q. Of the Bureau of Ordnance?

A. Chief draftsman of the navy yard.

Q. That is under the direction of the Bureau of Ordnance?

A. I believe so.

Q. And all you had to do with it was to follow this patent, to take this English drawing and the description contained in the patent and make working drawings from which a model would be made in exact conformity with the English patent?

A. Yes, sir.

Q. That is what you were directed to do and that is what you did in conformity with those directions?

A. Yes, sir.

310 Q. And having finished those drawings you turned them over to whom?

A. The chief draftsman, to let them go through their proper source in the workman shop.

Q. And that is the usual course with the drawings in the navy-yard gun shop, and your connection with it ceased then?

A. Yes, sir.

Q. You were never called upon to make further drawings?

A. No, sir.

O. H. WORSEY.

DISTRICT OF COLUMBIA, *ss:*

I, Martin S. Decker, a notary public in and for the District of Columbia, do hereby certify that before the taking of the foregoing deposition the said O. H. Worsey was by me first duly sworn to tell the truth, the whole truth, and nothing but the truth concerning the controversy in the case between James B. Grosvenor *et al. vs.* Robert B. Dashiell, in equity No. —, pending in the circuit court of the United States for the district of Maryland.

In testimony whereof, I have hereunto set my hand and notarial seal this 4th day of May, A. D. 1894.

MARTIN S. DECKER,
[SEAL.] *Notary Public, D. C.*

DISTRICT OF COLUMBIA, *ss:*

I, Mina G. Olcott, being first duly sworn, do depose that the foregoing deposition of O. H. Worsey was taken down by me in shorthand at the time and place of the giving thereof; that is to say, on the 21st day of October, A. D. 1893, at the office of Messrs. Phillips & McKenney, room 23, in the Baltimore Sun building, No. 1317 F street N. W., Washington, D. C. That the said shorthand
311 notes were by me transcribed and the three pages of typewriting next preceding is a true and literal transcription from said shorthand notes, and of the whole thereof.

MINA G. OLCOTT. [SEAL.]

Subscribed and sworn to before me this 4th day of May, A. D. 1894.

CHARLES G. SHOEMAKER,
[SEAL.] *Notary Public, D. C.*

WILLIAM I. HOUGH, a witness of lawful age, called by and on behalf of the defendant, having been first duly sworn, is examined.

By Mr. PHILLIPS:

Q. What is your business?

A. Master mechanic of the breech mechanism in the navy yard in Washington, D. C.

Q. How long have you been there?

A. Since 1884.

Q. As master mechanic, upon what have you been occupied?

A. Mostly breech-work mechanism for nearly all calibres of ordnance.

Q. Are you a skilled man in regard to breech mechanism for cannon?

A. I am considered so.

Q. An expert in such matters?

A. Yes, sir; I consider myself such.

Q. You see the model that is before you there—breech of a cannon?

A. Yes, sir.

Q. Did you ever see it before?

A. Yes, sir.

Q. When and where, and what connection did you have with it?

312 A. From May to July this present year, the drawings were sent to me from the ordnance office to make a model of the mechanism in conformity with the drawings, and I made the model which you see from those drawings; that is, I had charge of the work.

Q. Does that model represent the drawings accurately?

A. Yes, sir.

Q. Mr. Hough, have you any remarks to make about that machinery; do any occur to you in your line of business as an expert?

A. It is not a practical working mechanism as it stands.

Q. In what respect is it not?

A. In two respects. One is there is no latch to hold the tray to the gun, and also keep the plug on the tray when the plug is withdrawn. It has a positive motion—what I call that—coming out, unlocking and withdrawing the plug, but in returning the plug the friction on this dovetail slips and lets the mechanism close without shoving the plug home to its place.

Q. What have you to say, if anything, about that slipping?

A. Nothing to say, only that it will not work that way practically; to use on board ship or for service it is no good. There will have to be some different arrangement to prevent that slipping.

Q. How would that be effected?

A. Now, for a positive answer to that I would have to try to see what I could do with it. To sit here and look at it I might say it could be done. I think it can be done. A preventive can be found to stop that slipping and make the mechanism work.

Q. What would that be in the nature of?

A. It would be in the nature of a cam.

Q. Where?

A. The idea I have now would be on the tray; that is what I would try first; if that did not work I would have to take some other scheme.

Q. You think it would require a mechanical addition in the way of a cam?

A. Yes, sir.

313 Cross-examination.

By Mr. WILSON:

Q. Was this model made under your direction from the working drawings made by Mr. Worsey?

A. Yes, sir.

Q. When was the work begun upon the model?

A. I think about the first of May, as near as I can recollect.

Q. In the present year?

A. In the present year.

Q. And about when was it completed?

A. About the first of July.

Q. As it is now?

A. Yes, sir.

Q. That is, it is now in the same condition as it was in when it was completed at the navy yard?

A. Yes, sir.

Q. And as so completed you intended it to be a reproduction of the drawings furnished you by the chief draftsman and made by Mr. Worsey?

A. Yes, sir.

Q. And as it stands it is so to the best of your knowledge and belief?

A. To the best of my knowledge and belief it is an exact reproduction of those drawings.

Q. You have not directed any change to be made upon the machine as shown by the drawings of Mr. Worsey?

A. No, sir; not one iota.

Q. And I understand you to say that the machine made in exact conformity with such drawings is not a practical working machine as it stands, being so made?

A. Yes, sir.

Q. And in order to make it practical it requires some further invention on the part of yourself or somebody else to overcome what you deem to be the obstacles to its working; is that so?

A. Yes, sir.

314 Q. And you have suggested a scheme which you think might overcome those obstacles, but have not tried that scheme to see if it would work in practice; is that so?

A. That is right.

Q. And if you did not discover that that scheme would work in practice or did not discover some other scheme which would make it work in practice, then your conclusion would be that so far as you are able to say the machine would not work at all; is that so?

A. That is so.

Q. You observe a paper tacked upon the top of the machine with writing upon it—have you seen that before?

A. Yes, sir; I tacked it there myself.

Q. Will you be kind enough to read to the examiner the words which appear on that paper?

A. (Reads:) "First, in opening press against rear end of tray at A, till tray is ready to swing; second, in closing press against tray at same point, A, and swing the tray by this pressure rather than by the end lever, otherwise the plug will slip on the tray; third, work slowly."

Q. For what purpose did you put directions upon the model; what did you intend to accomplish by putting them on?

A. So that a person in handling this mechanism who did not understand it might not get it out of place.

Q. The letter "A" there referred to, is, I suppose, the letter at the end of the tray?

A. Yes, sir.

Q. And was it put on to make intelligible the written directions you have just read?

A. Yes, sir.

Q. Then those directions were put on, were they not, because the mechanism could not be made to operate without observing those directions?

A. Yes, sir.

315 Redirect examination.

By Mr. PHILLIPS:

Q. Mr. Hough, you answered Mr. Wilson just now that it would require additional invention to make that mechanism work. Did you mean invention? Do you know the difference between invention and mechanical skill?

A. I do not know the definition thoroughly.

Q. What did you mean by invention?

A. An invention is an idea of any mechanical machine that is useful.

Q. You draw no distinction between mechanical skill and invention?

A. Yes.

Q. Do you mean to say that the changes that would be required by that mechanism to work it would be a change suggested by mechanical skill or invention?

A. Some mechanics can do very fine work, but they do not use much brains about it.

Q. You answered Mr. Wilson that it would require additional invention to make that a working machine. What do you mean by the word "invention"?

A. I don't understand the question.

Q. I want to know whether you know the distinction between mechanical skill and invention?

A. I don't know the fine difference between them.

Q. Did you mean that it was invention or mechanical skill?

A. Mechanical skill is aptitude for doing a nice piece of work from instructions from other parties.

Q. Is putting a latch there mechanical skill?

A. No, sir; to put a good latch to make that work would require invention.

Q. You meant that by the answer to Mr. Wilson?

A. Yes, sir.

Q. If the mechanic uses any brains to make anything it is invention?

A. Yes, sir.

316 Recross-examination.

By Mr. WILSON:

Q. Is this your meaning, that where a man uses his brains to make something which has not been made before that that is in-

vention; but where he simply uses his brains to follow a design already made that that is mechanical skill?

A. Yes.

Q. And whether he uses his brains in making a complete machine which has never been made before, or in introducing some new element into the machine, which the original design did not show, in either case you would consider that it was a case of invention, would you?

A. For that particular purpose, yes.

Q. Mechanical skill takes working drawings and fits the parts together so that they can work, if the design is susceptible of working; is that so?

A. Yes, sir.

Q. While what you term invention would require something new not shown by the drawings?

A. Yes, sir.

Q. And that is the distinction you meant to make in answering the previous questions as to invention or mechanical skill?

A. Yes, sir.

Second redirect examination.

By Mr. PHILLIPS:

Q. Therefore, as I understand you, Mr. Hough, if you added a latch to connect that tray and the breech, it not being in the working drawings that were sent to you that would be invention?

A. For this particular mechanism it would be.

Q. You have to follow accurately the drawings that are sent to you, and if you do not it is an invention?

A. Yes, sir.

Q. Would it be the same sort of invention putting a cam there as putting a latch?

A. Yes, sir; I should say so.

317 Q. The cam that you speak of is the same sort of invention as the latch, would be an exhibition of the same sort of brain-work?

A. Yes, sir.

Q. And with that application of brain-work it may be made to work?

A. I do not say positively; one could try; my opinion is that it could be made to work.

Q. But your business has been merely to reproduce the drawings?

A. Yes, sir.

WM. I. HOUGH.

The foregoing deposition of Wm. I. Hough was taken down in shorthand and transcribed by me.

MINA G. OLCOTT.

318 In the Circuit Court of the United States, District of Maryland. In Equity.

JAMES B. M. GROSVENOR *et al.*, Complainants,
vs.
ROBERT B. DASHIELL, Defendant.

Testimony taken by stipulation before Martin S. Decker, a notary public, at Washington, D. C., April 24, 1894, in the office of Phillips & McKenney.

Present: William G. Wilson, attorney for the plaintiffs; S. F. Phillips, attorney for the defendant.

WILLIAM F. DURFEE, a witness for the defendant, being duly sworn, testifies as follows:

By Mr. PHILLIPS:

Q. What is your name, your age, and place of residence?

A. My name is William F. Durfee, my age is sixty years, and I reside at West New Brighton, Staten island, New York.

Q. What is your profession and what has been your preparation for it, and for how long has it been practiced by you?

A. I am a civil and mechanical engineer by profession. I have practiced as a civil and mechanical engineer for about forty years. When I was quite a young man, from fourteen to eighteen years of age, I spent most of these years in various mechanical occupations.

319 I have worked in carpenter shops, in blacksmith shops and machine shops. I cannot be said to have served an apprenticeship at either of those trades, but at the same time I can say I have acquired a considerable technical skill at all, after having had this practical experience. I attended for somewhat over two years—about two and a half—the Lawrence Scientific School at Cambridge, Massachusetts; I went there to study certain specialties, such as mechanical drawing, surveying and certain branches of mathematics, and after having accomplished what I intended I left, but did not graduate. Very soon after that I commenced practice as civil and mechanical engineer, and in 1855, about three years after I left the scientific school, I built a rolling mill for rolling iron, in New Bedford, and also held the office of city surveyor for about five years, and during that time I did a great deal of field-work as surveyor and civil engineer. I also designed various pieces of machinery and built a number of buildings. After that, for the balance of my life, I have been engaged in miscellaneous practice as a mechanical and civil engineer. I built a number of mills for the manufacture of iron and steel. I built the first Bessemer steel works which has been operated in the United States, and in those works were made the first steel ingots from which the first steel rails made in this country were rolled. I have been connected with the Wheeler & Wilson Manufacturing Company, at Bridgeport, Connecticut, as a designer of special machinery for about four years. I have also acted as consulting engineer for the Union Metallic Car-

tridge Company, of Bridgeport, Connecticut, at the same time, and in that capacity had charge of extensive remodelling of their motive power and machinery of transmission. I was, for a time, superintendent of the Midvale steel works, in Philadelphia, during which time there was manufactured all of the steel for the St. Louis bridge. I have had a pretty broad experience in mechanical affairs. I have designed machinery for making a wide range of products; I have had to do with making machines for the manufacture of sewing-machine needles, as a sample of small machinery that I have
320 designed, and also the design of machinery for the heaviest class of iron and steel works. I have designed and erected the first rolling mill built in America in which gas was exclusively used as fuel.

Q. Have you often been called upon heretofore to testify upon patents and other questions involving construction of machinery?

A. In the course of my professional life I have been called upon to give opinions in regard to the practicability of machinery for doing certain work. I have also been called in quite a number of instances to testify as an expert in cases involving the functions and construction of patented machinery.

Q. You have before you a model of the breech of a breech-loading cannon, have you not?

A. Yes, that is it.

Q. Have you examined that model with care?

A. I have.

Q. When did you first see it?

A. I first saw that model about a fortnight ago, I think it was, but to give an exact date I will have to refer to my memorandum book; it was on the afternoon of the 10th day of April, 1894.

Q. You have in your hand an English patent issued to Thorston Nordenfeldt, No. 7195, date May 17, 1887, certified to by Mr. Wm. E. Simonds, Commissioner of Patents, on the 23d of February, 1893; have you compared that patent with the model before you?

A. Yes, I have made the comparison.

Q. The model, therefore, is a model of the Nordenfeldt patent No. 7195?

A. Well, it seems to be intended for a model of that patent.

Q. As the model stands, is it an operative device?

A. Well, as the model now stands it fails to be an operative device in two particulars. I should explain that a little by saying that the model when I saw it failed to be an operative one in two particulars; it now fails to be an operative one in one particular. When I first saw the model it failed to operate, inasmuch as when the handle of the lever was pulled it failed to extract the breech block from the breech of the gun until pressure was brought by hand or some other means at the point "A" on the extremity of the shelf of the breech block; unless that shelf was held while the breech block was withdrawn the model would not operate. Further, after the breech block had been withdrawn and swung to one side, then when it came to be returned to the breech of the gun, the model failed to operate, inasmuch as the apparatus

at the bolt *m*, in Fig. 4 of the drawings affixed to the patent aforesaid, failed to remain stationary and failed to have sufficient rigidity or secured relation to the arm *k* to carry by that arm *k* the breech block back into the bore of the gun. In the patent, there is no method shown by which that bolt *m* is maintained in sufficiently close connection with the arm *k* to cause that part of the apparatus to perform and operate as it should, but it was at once evident to me that if there was some simple and self-evident means to adjust the friction between the bolt *m* and the arm *k*, that that frictional resistance would overcome this objection. Accordingly, in order to illustrate my views in that regard, I inserted in the model, between the bolt *m* and the under surface of the arm *k*, a thin piece of sheet steel in order to produce sufficient friction to cause the apparatus to work as it should. This piece of sheet steel is now in the model. It is by micrometer one and one-half thousandths of an inch thick. That small thickness of metal is amply sufficient to cause that part of the machinery to work as it should. The bit of steel which I have inserted can readily be removed with a pair of pincers, and the model restored to its original condition, in which condition the bolt *m* fails to operate as it should. That is one simple means of causing the bolt *m* to perform its proper functions, the functions which it was clearly intended to perform by the inventor of the apparatus, as I understand that part of the apparatus. And, in fact, as I understand the whole of this Nor-
322 denfeldt patent, the patentee evidently intended merely to secure by letters patent those parts which he himself invented, leaving for ordinary mechanical skill to supply such common and well-known devices as were necessary to make the parts which he invented perform their functions as he intended them to do. And the fact that the insertion of this small bit of steel produces the small amount of friction which that added thickness produces, makes it evident to me that it is necessary and was probably contemplated by the inventor that friction or some other mechanical device should be used at that point in order to make the bolt *m* perform its functions as it should. Further, it is also evident to me from the inspection of the patent that the nut shown in Fig. 1 of the drawings, attached to the patent, on the bolt at E, was intended to occupy a positive relation to that bolt after it had once been screwed up, because there is evidence (and it is shown in the drawings) of a pin passing through transversely the bolt E and preventing that nut from being turned back by jar or any other accident. In the model there is no such pin shown, therefore in the model the nut at the lower end of the bolt E can be moved by the fingers and is liable to be displaced by any jar or shock. Further, the model fails to represent the drawings of the patent in another important particular, the detail *k* shown in Fig. 1 of the drawings of the patent is shown in close contact with the hinge a^2 in said drawings. In the model the part *k* is not in contact with said hinge a^2, and cannot be made to come into contact with it by screwing up the nut before referred to. That is an important omission. My belief is that it was the intention of the inventor to adjust the

friction between the part *m* and the arm *k* by means of that nut. And because of the sleeve attached to the part *l*, shown in Fig. 1, extending through the arm *k*, having been made too long by the constructor of the model, it is impossible to make that nut perform the functions to which I have referred. In other words, by screwing up the nut at the lower end of the bolt E, in Fig. 1, it is impossible to influence in any way the friction between the bolt *m* and the under side of the arm *k*, because the sleeve portion of
323 the bolt *l* is too long and comes in contact with the under side of the hinge jaw a^2. And my belief is that if that sleeve had been made only about one and one-half thousandths of an inch shorter than the thickness of the arm *k*, through which it passes, that that nut at the lower end of the bolt E could be made to produce at will the requisite friction to make the bolt *m* perform its intended functions. In the respects that I have named, the model fails, in my judgment, to represent accurately the state of facts shown by the drawings affixed to the said Nordenfeldt patent.

Q. In your answer you refer to certain mechanical additions or variations of the model in question which would, if applied, render it an operative mechanism. Will you be so good as to state some of those variations which have occurred to you as within the competency of a skilled mechanic for building up an operative mechanism of the Nordenfeldt patent No. 7195.

A. One of those mechanical devices which I think—and, in fact, all of them, I think—are quite within the functions of an ordinary skilled mechanic, and I do not think that any of these things which I am about to name are, or can be ordinarily considered, inventions, because they are mere matters of proportion in some cases, and mere matters of mechanical application of well-known devices in others. One of these details is the shortening of the sleeve *l* as it is constructed in the model so as to enable the nut at the lower end of the bolt *e* to be used to produce friction, as I have already stated. Another is the introduction of a latch to hold the shelf on which the breech block is supported when drawn out from the gun in contact with the breech of the gun, while the breech block is being withdrawn from it. This latch can take, possibly, a number of forms, but the application of the latch for that purpose is as common as the application of a latch to a door. In fact, the shelf or carrying arm marked C red in Fig. 1, and also marked *i* is simply a swinging device that turns on the bolt E, quite similar to a door upon its hinges. Another common appliance which might
324 be applied to the model to make its operation more perfect, is some method of producing friction between the bolt *m* and the under side of the arm *k*, in order to make the bolt *m* perform its functions properly. There are various methods of producing that friction besides those already enumerated. I have represented three methods in the sketches on the sheet marked 6 and signed W. F. Durfee. The upper method shown in that sketch consists of a screw-bolt passing through the arm *k* and acting upon the plate or washer marked W, and pressing it upon the upper surface of the bolt *m*; by turning that screw more or less a greater or less amount of fric-

tion can be produced between the upper surface of the bolt *m* and the plate W, which is, for the moment, a part of the arm *k*. Another method for producing friction between the bolt *m* and the arm *k*, is shown in the second sketch referred to. This consists in placing a gib G between the dovetailed groove on the under side of the arm *k* and the dovetail on the bolt *m*, and that gib G being capable of adjustment by means of a horizontal adjusting screw, shown in the sketch, to produce more or less friction between the bolt *m* and the arm *k*. The third sketch shows a modification of the second sketch, in which a similar gib G is operated upon by a different kind of set-screw, and also produces friction between the two dovetails before described, and a friction which can be regulated in amount and controlled at will very readily. These devices for producing friction between these parts are well-known mechanical devices for such a purpose and are used in a great variety of machines. The last two sketches show methods that are used on lathes, shaping machines and mechanism of that class. There is one more point: In the description of the drawings in Nordenfeldt's patent it is said that the crank arm l^2 operates to throw the bolt *m* into position behind the projection on the sleeve *l* at the proper moment. It is also stated that the bolt *m* must not be removed from this locked position until the breech block is inserted into the breech of the gun; there is no means shown in the patent by which the bolt *m* is kept in that position, and if we assume that the
325 groove m^1 has parallel sides, it is quite evident that unless there is friction sufficient between the bolt *m* and the under side of the arm *k*, to enable it to remain in its position while the arm *k* is pushing the breech block into the gun, the return of the arm l^2 would, if that groove in the under side of the bolt *m* were parallel-sided, tend to remove the bolt *m* from its locked position behind its projection on the sleeve *l*, and would so remove it if the friction which I have supposed did not exist. Now, there is a very simple mechanical device, in fact it is hardly proper to call it a device, because it is merely the renewal of a certain amount of metal that will prevent the arm l^2 acting at once to withdraw the bolt *m* from its position behind the projection on the sleeve *l*—for we have only to suppose, as I have shown in the sketch marked 4ª and signed W. F. Durfee, that the side of the groove m^1 is not parallel with the opposite side—we have only to suppose that, as I show, and the returning movement of the arm l^2 will not act at once upon the side of the groove in the bolt *m* to withdraw it, and that the time when that action takes place can be fixed by the shape of that side of the groove towards and against which the arm l^2 is then moving. That is a common mechanical device in cam grooves, the introduction of lost motion at the proper time to allow a certain part of the mechanism to stand still. That is, it merely consists in cutting out the side of the cam groove in the bolt *m*, so that the arm l^2, when in the position of l^{xx} and about to return towards the point marked l^2, will not act upon the right-hand side of the groove m^1, shown in the sketch 4ª, signed W. F. Durfee. By so shaping that side (the right-hand side shown in the sketch, of the groove in the bolt *m*) the time

when the arm l^2 acts upon that bolt to remove it, or commences to act upon that bolt to remove it, can be fixed at pleasure. I do not consider that the mere removal of metal from the right-hand side of the groove m^1, as shown in the sketch referred to, is an invention. It is precisely analogous, in my mind, to a case like this: A carpenter, in putting a latch onto a door, gets the catch on the
326 jamb of the door a little too far in, so that when the door shuts the latch will not drop into the catch; he at once takes a file and removes some of the metal of that catch, enough to allow the catch to perform its functions. There is no invention in such an act—it is simply the removal of objectionable material which interferes with the proper working of the model. In the case of arm l^2 and in connection with the bolt m, I think the circumstances are precisely similar. If the machine were originally made with the parallel-sided groove, so that the arm l^2 would immediately, when it commenced to return, act upon the right-hand side of the groove m^1 and cause the bolt to come out of its place in connection with the projection on the sleeve l, any ordinary mechanic in the exercise of ordinary technical skill would see at once that that arm was acting too quick, that it was doing something that interfered with the proper functions of the bolt m, and it would be the most natural thing in the world for such a skilled mechanic to remove the metal from the right-hand side of the groove m^1, in order that that result should not be produced.

Counsel for complainants moves to strike out from the last answer so much of the statement of the witness as expresses the opinion of the witness as to what workmen, skilled or otherwise, would do under certain circumstances, on the ground that it is not a proper subject for expert testimony.

Q. Do the specification and drawings in Nordenfeldt's patent indicate or suggest a sleeve at the lower end of the spindle, which shall be of comparatively greater breadth along that spindle than that of the end of the withdrawing arm?

A. No, there is no suggestion in the patent that the depth or breadth of the sleeve on the part marked l shall be greater than the breadth along the pin of the arm k of the withdrawing arm. In fact, the drawings show, so far as can be seen, that the sleeve on the part l is of precisely the same depth as the portion of the withdrawing arm k, through which the sleeve passes. There is no in-
327 dication of any excess in the sleeve over and above the part of the withdrawing arm k, which encloses it.

Q. Is the question how to prevent the slipping of one metallic surface upon another under circumstances where such slipping is an obstacle to the operation of machinery, one that very commonly requires solution by constructors of machinery, and one which is as commonly as easily solved by ordinary mechanical skill?

A. In the present state of the art of machine design and construction, it is a very common circumstance to introduce various methods of producing friction in machines, in order to make these machines perform their proper functions. There are so many ways of doing

this, and these ways are well known by the mass of mechanics in the world, that I have no hesitation in saying that any mechanic of ordinary skill would have no difficulty in selecting one of these methods, and I should not regard the fact of that selection as being invention. As an illustration of the use of friction in mechanical construction, I will cite the method of securing pulleys to shafting. It is very common, indeed, to put a set-screw through the hub of a pulley and by turning that set-screw up against the shaft to produce sufficient friction between the shaft and the hub to hold the pulley in its position and enable it to do the work required of it. Such a set-screw operates in the same way and is very similar in character to the set-screw shown in the first sketch, Fig. 6, signed W. F. Durfee. The gibs shown in the other two sketches on said sheet are also, as I have already stated, common methods of producing friction that is absolutely necessary for the parts to perform their proper functions. There are certain parts of planing machines which have revolving friction disks that are necessary to enable the machines to do their work properly; one disk sometimes acts to drive the other, and when the other is opposed by resistance the friction enables the first to slip upon the second, and there are a variety of such methods. Friction clutches are among the commonest things in the mechanical world.

328 Q. Do the specification and drawings in the Nordenfeldt patent in question, describe a mechanism for turning the breech block, extracting it and passing it to one side by one continuous movement of the lever, and afterwards for reversing such three subordinate movements in the same way, that with a supply of ordinary mechanical devices would be operative?

A. I think they do. I think that with supply of ordinary mechanical devices, such as I have been describing, to the inventions of Nordenfeldt, which he has described in his letters patent, his invention could be made an operative and efficient device.

Cross-examination.

By Mr. Wilson:

Q. You stated that this model, Nordenfeldt structure, now contained a very thin piece of sheet steel which you put in there for the purpose of introducing the friction in regard to which you have testified, and that the thickness was one and one-half thousandths of an inch. What are the other dimensions of that piece of steel so far as they produce any effect upon the working of the mechanism?

A. I did not measure any other dimensions of the steel; I do not think the other dimensions are operative to affect the mechanism.

Q. I mean how wide is the strip of steel, and how far is it inserted or wedged in between the two bearing surfaces?

A. I should think it was about one-quarter of an inch wide; I should think it might be one and a half or two inches long, I am not sure, because I did not think them important.

Q. Did you try a thicker piece of metal first, for the same purpose?

A. I tried a piece of watch spring first; it was thicker—how much, I do not know.

Q. Was it twice as thick as this piece?

A. I should think it was.

Q. What was the effect of inserting that?

A. Could not insert it; it was too thick for the space.

329 Q. What would be the effect if this piece of metal were only one-thousandth of an inch in thickness?

A. I cannot state definitely, but I have reason to believe that one-thousandth of an inch would produce some friction, although less than this, perhaps it would still be enough.

Q. But, in order to operate by means of such friction, the amount of friction must be quite nicely adjusted, must it not?

A. I do not think it requires such very nice adjustment.

Q. And also, I suppose, it induces more rapid wear on the surfaces—the greater the friction the more rapid the wear?

A. Naturally; certainly.

Q. And after the surfaces had worn down by reason of that friction, then the friction would be insufficient?

A. Yes.

Q. While this piece of metal is in the model, I ask you if there is not in a certain part of the first movement in unlocking a very serious resistance to the action of the lever?

A. The first movement of unlocking, while the breech pin is turning for nearly the whole of this movement, there is no great amount of resistance; but for the last—I should say for the last third, perhaps, of its movement, its resistance is considerably augmented, but I do not consider that that resistance is fatal to the working of the machine.

Q. But in handling the lever to induce this there is quite a considerable resistance at that point?

A. Yes.

Q. That increased resistance disappears on continuing to swing the lever for withdrawing the block and turning it one side?

A. Yes.

Q. Is the same true in returning the block?

A. The same is true.

Q. And at the same point of the operation it is relieved. Now, is not that increased resistance due to that friction of which you have spoken?

330 A. I am not prepared to say. It may be due to other causes which are not apparent.

Q. Is it not true that this increased resistance occurs at the time when the friction of which you have spoken, caused by the introduction of this thin strip of steel, is doing its work?

A. Yes; it is true that the time when the increased resistance occurs is when this friction is taking effect.

Q. Now, before you introduced that piece of metal to create this friction, how did the mechanism as shown by the model operate when you endeavored to close the block from the open position?

A. The bolt *m* moves so easily that the arm l^2 simply moved the

bolt *m* out of its place behind the projection of the sleeve *l*, and the bolt *m* slid along the under side of the arm *k*, and the arm *k* did not move to swing the shelf back to its proper position.

Q. That is, if I understand your last answer, accordingly the resistance of the block itself to the effort to push it in was so much greater than the resistance of the bolt *m* that the latter moved first instead of waiting the sliding of the block in as it should do?

A. Yes; that was the effect before the friction was applied.

Q. And then it is also your explanation that the application of friction to the bolt *m*, in the degree to which you applied it by this thin strip of metal, has made the resistance of that part greater than the resistance of the block in its slide?

A. Yes; that is true.

Q. That is, this change overbalances the resistance caused by the friction of the block in its slide by a greater resistance because by the friction of the bolt *m* in its slide; is that true in your view of the operation of the parts?

A. That is substantially the fact.

Q. As the thing now stands, the model is constructed with a cam slot in which l^2 moves substantially in the form shown by Fig. 4 of the Nordenfeldt patent?

A. Yes; that is so.

331 Q. And with that slot so constructed, the difficulty of the premature movement of the bolt *m* is wholly overcome by the friction produced by the introduction of the small piece of steel; is it?

A. Yes.

Q. Could that be so if the pin l^2 operated during its revolution to drive the bolt *m* out?

A. Yes; if I understand that question.

Q. I mean by my question, could the friction caused by the small piece of steel arrest the positive action of the pin l^2, while the lever was swinging?

A. It does do it.

Q. If that is so, please explain what the action of the pin l^2 is in closing the breech block, as the model now stands.

A. Owing to the friction caused by the introduction of this small piece of steel, the bolt *m* cannot be moved by the action of the pin l^2 readily, the first action of the pin l^2 is to swing the arm *k* and thus push the breech block into the bore of the gun. Just as quick as that has been accomplished, then, owing to the breech block being brought up solidly against the bottom of the chamber in the gun, it is impossible for the arm *k* to move any farther in the direction it was moving, and then the pin l^2 commences to overcome the friction of the bolt *m* and to pull it out of its position until the breech block is in place in the base of the chamber in which it goes, the bolt *m* and the arm *k* are practically locked together and they move together in obedience to the action that operates them.

Q. That is, they are locked together by friction as the model now stands with the piece in it?

A. They are locked by friction in part and in part by the position

of the extremity of the bolt *m* behind the projection *l* on the sleeve enveloping the pin *b*, as shown in the Fig. 4 of the drawings.

Q. Now, supposing this model were an actual gun, designed for service and made of iron and steel, with friction introduced as it has been introduced here by the mode which you have adopted
332 with this model, what would be the effect of rust on the sides of the slot *i*[1] in which the pin which withdraws the breech block travels, upon the operation of the mechanism?

A. Well, if that was made of a material that would readily rust, as you have supposed, and that pin fitted abnormally tight, and the people who take care of it were careless enough to allow rust to accumulate to an undue extent, the accumulation of the rust and the increased friction would, of course, have an effect upon the working of the mechanism.

Q. Would the effect of the rust after it had come there be in any way modified by the carelessness of the people who had allowed it to arrive?

A. No, I do not know that it would, if it were allowed to remain there.

Q. Now, my question is, if a gun were made like this model, but with the tray and breech block and working parts of steel, and if rust did collect upon the tray, or bottom of the sides of the tray and on the sides of the slot in the tray, would this friction still enable the machine to work as it ought to?

A. Well, it depends on the magnitude of the rust altogether. Rust in any machine is an objection, especially of the moving parts, as it deprives them of their proper function in operation.

Q. If it accumulated with sufficient thickness and quantity, it would produce the same state of things you found in this model before you introduced this friction?

A. Unless the friction would overcome it.

Q. Unless the friction was properly increased?

A. Yes.

Q. Now, are you familiar with the subject of guns and ordnance in general?

A. I have had a number of opportunities to observe many guns in the past.

Q. You are then aware of the fact that they are machines to accomplish a given purpose often under conditions which are not like the conditions under which ordinary machinery is expected to work.

333 A. That depends on what you call ordinary. I know of many machines that work under more difficult conditions than any ordnance, as far as rust and wear and tear are concerned. Under the condition that artillery works, and its exposure to fire and water, steel is the last thing I should think of for making that tray, or iron either.

Q. Are you aware of the fact that ordnance boards, in testing mechanisms of this character, intentionally subject them, among other tests, to that of rust?

A. Yes: I have known them to throw muskets into the river to remain for weeks.

Q. Would you regard this mechanism with its device as suggested by you of friction upon the bolt *m*, as in good condition to satisfactorily stand that rust test and come out of it in working order, with the rust upon it?

A. Well, that depends upon the magnitude of the rust altogether. It would be spoiled by rust if it were left long enough. It is impossible for me to say whether the operation would be satisfactory after it became rusty.

Q. It would, however, be an element of difficulty to overcome under those conditions which would not exist if the action of the bolt *m* at the proper time was controlled wholly by direct mechanical action of two mechanical parts in connection with one another?

A. Whether that supposition is true or false would depend on the degree of rust. I can very easily imagine that the bolt *m* might be, if made of steel or iron, exposed long enough to rust solidly upon the parts adjacent, so that it might be inoperative on account of the rust. Parts that slide upon each other that are moved by positive connections sometimes rust together so that they cannot be moved.

Q. You have now, have you, removed from the top of the bolt *m* the small piece of steel of which you spoke?

A. I have.

Q. Is it about one-quarter of an inch in width?

A. About one-quarter of an inch in width, and that portion
334 which was in contact with the sliding parts was about two and one-half inches in length. About two and one-half inches of it were in contact with the sliding part, and the width of it is a little over one-quarter of an inch.

Q. With this piece of steel removed, what is the operation of the model?

A. When the handle is first drawn towards you in unlocking, the unlocking movement proceeds with entire regularity until completed.

Q. You do not, at that stage, notice the increase of resistance that you did while the piece of steel was in?

A. Very slight increase, but not as great as before. Then as the handle continues to move if I place my hand against the tray at the point "A" of the model and hold it firm, the breech block is withdrawn from the breech of the gun. At the completion of the withdrawing movement I release my hand from the point "A," and the continued movement of the crank arm swings the block away from the opening in the breech of the gun.

Q. In that part of the movement, the unlocking part, the only difficulty is in the design as shown by this model, and there is no latch to hold the tray against the breech during the withdrawal of the block on the tray?

A. Yes.

Q. And the bolt *m*, by positive pressure, operates to do its part of the work?

A. Yes. By positive contact this is done; in fact the bolt *m* does not come into that part of the movement; it is the projection or bottom of the sleeve *l* coming in contact with the projection k^2 on the arm k^1 that does that swinging.

Q. What function then does the bolt *m* perform?

A. No special function in the opening; the bolt *m* during the latter part of the opening is being moved into position behind the projection on the sleeve *l*, but it really is doing no work at that time.

Q. Then, so far as the opening movement goes, the bolt *m* might be dispensed with?

A. Yes.

335 Q. Now, when it comes to closing the breech gun in the model as it now stands without the piece of steel in it, what does the bolt *m* do as you take hold of the lever and begin to give the motion for returning the block?

A. The bolt *m* moves independent of the arm *k*; it slides on the arm *k*, and has no connection with it sufficient to move the arm *k*, as the model now is, without the piece of steel.

Q. In other words, as the model now is, the bolt *m* does no more work in the return of the breech block to the breech than it did in withdrawing it?

A. No.

Q. Now, in handling the model with the breech open what is the first effect of swinging the lever in the direction intended for closing the breech?

A. The first effect is to withdraw that bolt *m* from behind the projection on the sleeve *l* and to cause that block to slide along the under side of the arm *k*.

Q. And as you continue the movement of the lever what follows after the bolt *m* has slidden as far as the structure permits?

A. As I continue the movement of the lever, the right-hand side of the projection on the sleeve *l*, Fig. 4, in the patent drawings, comes in contact with the arm *k* and causes the arm *k* to move, carrying the block and tray with it.

Q. If that movement is kept up until the tray touches the gun, what then follows?

A. Then the arm *k* continues to move and the breech block is thrown into the chamber of the gun.

Q. And when the breech block is thus thrown into the chamber of the gun does the position of the other parts of the mechanism then admit the further movement required to rotate the block in the breech, in order to lock the screw-fronts together?

A. It will not; under the position which is supposed, it is impossible to lock them together.

336 Q. And that is for the reason, in part, is it, that that portion of the device which is intended to be in position to do the locking work at the moment the breech block has finally been thrust home into the breech, has anticipated the movement which should await this stage of the operation for the purpose of rotating and locking the block?

A. The rack which is intended to rotate the block and lock it in position is not in the proper relation to the block when it gets to its place in the breech of the gun to operate upon it.

Q. That is, the rack is in the locked position while the breech block is in the unlocked position?

A. That is it exactly.

Q. I understand you that your first connection with this case was about two weeks ago?

A. Yes, sir.

Q. Prior to that time you knew nothing of it?

A. I knew nothing of it before that.

Q. Then you understood this model, in regard to which you have been testifying, was made at the United States navy yard here in Washington?

A. Yes, sir.

Q. And that the works are under the control of the Bureau of Ordnance, United States Navy?

A. I have so understood.

Q. You also understand, do you, that the purpose of the device which this model is intended to illustrate is not solely to afford a means of opening and closing the breech of a gun provided with an interrupted or mutilated screw block, but is chiefly to perform those functions with great rapidity?

A. Yes; of course.

Q. Do you understand that more than that, devices to which this is assumed to belong are intended to give great rapidity of firing, and they are to be judged by that?

A. Yes; I understand it.

Q. Have you ever handled the breech-block mechanism of any rapid-fire gun or cannon?

A. I cannot say that I have, although I may have done so.

337 Redirect examination.

By Mr. PHILLIPS:

Q. Mr. Durfee, when you say that with certain mechanical variations of the model of the Nordenfeldt gun it would be an operative device, did you mean that it would be an operative device as a rapid-fire gun?

A. Yes, I think it can be made with the modifications I suggested.

Q. Do you know the general reputation of Thorston Nordenfeldt as an engineer?

A. I know his general reputation.

Q. What is it?

A. It is very good as a very successful mechanician, especially in reference to ordnance matters.

Q. I place in your hands Seabury letters patent No. 425,584, and ask if there is not in this a like conflict as in the patent referred to in the cross-examination, betwixt friction designed to effect a pushing into the block into the breech and of friction by the block on

its way, and if so, at what points does that friction which transmits the motion of the spindle to the withdrawing arm occur, and how is that friction ended?

A. Referring to Fig. 2 of the drawings accompanying the patent, there is what is called a stirrup or lever in the specifications, g^{10}, on the end of that is a pin marked g^9; now in that figure the breech block is shown in place locked into the breech of the gun; as the handle of E^3 is pulled the shaft E and its enveloping sleeve are turned together and the pinion E^1 on that shaft operates in the first part of the movement, to unlock the breech block B of the gun; as the movement continues, the projection g^6, on the sleeve g^7 which surrounds the shaft E, comes in contact with the shaft g^1 and thus operates to pull the breech block B out of the gun, and the projecting pin g^9, on the lever g^{10}, drops into the notch on the side of the projection g^6, on the sleeve surrounding the shaft E, when the breech block B is completely moved out of the gun; by continuing the movement of the lever E^3, it is swung around to one side, as
338 shown in Fig. 6. Now, on the reverse movement of the lever E^3, (the pin g^9 on the lever g^{10} having dropped into the notch before mentioned), as the movement continues after the breech block B has been swung back ready to enter the gun, the shaft E acting upon the sleeve surrounding it, the projection g^6, on said sleeve acts upon the pin g^9, on the lever g^{10}, and that acts in turn upon the shaft or pin g^1, and causes the crank arm G to push the breech block B into the breech of the gun, and the condition of things we find, is similar to what is represented in Fig. 5 of the drawings. Now, that pushing action acts entirely upon and through the medium of the pin g^9, on the lever g^{10}, and when the breech block B is pushed entirely into the breech of the gun it then becomes necessary to turn it to lock it in its position. In order that the turning shall take effect the shaft E has got to continue to move in the direction in which it has been moving; and in order to so continue its movements it has got to clear itself from the pin g^9, and can only do that by overcoming the friction of that pin on the side of the notch, and causing the pin to slide up the side of the notch; in doing that it will compress the spring upon the other end of the lever g^{10}, and the projection of the sleeve on the shaft E will pass under the pin g^9 and the shaft will be allowed to continue its movement and so complete by the medium of the pinion E^1 on the locking of the breech block. Now, unless the friction of the pin g^9 in the notch in which it has been operating before it is removed in the manner I have just described, is sufficiently great to counteract any friction or resistance of the movement of the block into the breech of the gun, the apparatus will be inoperative. It is the fact that there is sufficient friction taken in connection with the peculiar relation of the notch with the pin g^9 that enables the apparatus to act, to force the breech pin into the breech of the gun. That friction is produced by the action of the spring on the opposite end of the lever g^{10}; if that spring was removed the apparatus would be practically inoperative. In my judgment, that spring is essential

to produce the friction necessary to make the parts described perform their functions.

339 Q. I understand you to say that if the close of the action by the projecting pin g^9 in returning the breech block to the breech is necessary that the stirrup pin should escape from its position, otherwise the machinery mechanism would not affect the locking?

A. It would be impossible to lock the breech pin by turning it unless that pin g^9 got out of the notch it was operated in.

Q. Would rust upon the parts which create and are affected by the friction have like effects to the Seabury device for cannon in actual service, as it would in the Nordenfeldt device?

A. Rust on such small surface would be very objectionable. There is very little wearing surface of contact there.

Examination of Mr. Durfee suspended.

Recall of Mr. WILLIAM I. HOUGH.

By Mr. PHILLIPS:

Q. You have in your hand a roll of drawings; will you say what they are, if they have any application to the Nordenfeldt model and testified to by you heretofore?

A. Yes, sir; they are the drawings that I worked from in constructing the Nordenfeldt model.

By Mr. WILSON:

Q. They are known by the official numbers, 10366, 10338, 10336, 10332, 10327, 10295, 10296, 10299, 10311, which numbers are upon the face of them, and they are all identified by the signature of Theodore F. Jewell, commander United States Navy, and superintendent naval gun factory, and bear date various days in June, 1893?

A. That is right.

Q. These are the drawings by which that model was constructed?

A. Blue prints taken from these drawings.

Q. These are drawings from which the blue prints are printed like the printing from a photograph negative?

A. Yes, sir.

340 Q. There is no variation between these and the blue prints?

A. Not that I am aware of.

Q. And there could be no variation between these and any blue print printed from them?

A. Not unless there have been some changes since that I know nothing of.

Q. Do these drawings contain the assemblage of the parts?

A. Yes, and detail.

WM. I. HOUGH.

Examination of Mr. DURFEE resumed.

By Mr. PHILLIPS:

Q. Mr. Durfee, you have heretofore examined these drawings?

A. I have examined the blue prints.

Q. You have not seen these?

A. I have not.

Q. You have not examined these at all?

A. No, not at all; I have never examined these, but on looking at them I recognize certain dimensions that I saw on the blue prints in regard to certain parts to which I particularly gave attention on the blue prints; they are the same on these drawings as I saw on the blue prints.

Q. Did any observations occur to you when you examined the blue prints; if so, what?

A. I found that certain dimensions of detail did not agree with the assembled drawing and they did not agree with other details with which they were connected; for instance, the drawing No. 10366 in the elevation shown in the upper left-hand corner of the sheet, the thickness or vertical height of the end of the carrying arm is figured as 1.35 inches; calling attention now to drawing No. 10311, the upper left-hand drawing on that sheet represents the carrying arm and some of the parts connected with it; the vertical thickness of that is also as in the previous drawing, 1.35 inches
341 thick; now referring on this same sheet, to drawing marked "D" with a red pencil on sheet 10311, this drawing represents the sleeve *l*, which passes through the arm *k*; now, the distance marked 1.40 inches should have been made not in excess of the distance 1.35 inches, as shown in the carrying arm of the upper left-hand corner of the same sheet of drawing; and also, on the elevation of the drawing 10366, aforenamed, and the upper left-hand drawing in sheet 10366, is not made or assembled in accordance with the detail drawings shown in the other sheet 10311, because if it had been so made there would be the distance between the upper side of the carrying arm which is figured 1.35 inches and the under side of the hinge which supports the carrying arm and the pin on which it rotates, of $\frac{5}{100}$ of an inch, and in that respect the assembled drawings agree with the model, because in the model there is a space as I before testified, between the under side of the hinge and top side of the carrying arm of about $\frac{3}{100}$ of an inch.

Q. The Nordenfeldt model, in the evidence, differs, therefore, so far from the specification in the letters patent?

A. There is that difference, of at least $\frac{3}{100}$ of an inch from the ideas illustrated in the letters patent, and there is also the difference between the model and the upper left-hand drawing in sheet 10366.

Q. What would be the practical effect of that difference?

A. The practical effect of that difference would be that the sleeve *l*, Fig. 1 Nordenfeldt drawing, passes entirely through the arm *k* and comes in contact with the under side of the hing a^2, and it also,

the flange on the lower side of the sleeve *l* comes in contact with the under side of the arm *k*. I do not think it was the intent of the drawings in the Nordenfeldt patent that that should be the case: it was certainly intended that the sleeve should be along the vertical bolt on which it turns rather less than the thickness of the arm *k* which envelopes it, because there is no space there between the top of the arm *k* and the under side of the hinge *a*, as there is in the model which was made from these drawings, of which I have spoken.

342 Q. What effect of all that?

A. The effect of all that is, we cannot maneuvre the nut on lower end of the spindle or pin E to produce friction between the bolt *m* and the under side of the arm *k*, as we otherwise could have done.

Recross-examination.

By Mr. WILSON:

Q. You have testified in regard to the reputation of Nordenfeldt, whose patent we have been discussing; if you learn that this patent which has been under discussion had never been reproduced in an actual gun in the five or more years since the patent was taken out, would that fact, together with your knowledge of Mr. Nordenfeldt's reputation, affect your judgment as to the availability of the device which the patent was designed to show?

A. Well, under the conditions which I suppose and have been told existed and surrounded Nordenfeldt during a part of the time (I do not know whether they have ceased now), I should say that this thing, not having been reduced to practice, would not affect my judgment.

Q. Would it affect your judgment that other devices of the same kind for handling an interrupted screw-bolt have been developed in guns which are in use?

A. It would depend on what time these devices were perfected—before or after this device was.

Q. Suppose it was about the same time, or subsequent to this, that the other devices were perfected?

A. If Nordenfeldt had perfected some other devices since this invention was made I should say that there was a probability of his having either discovered some improvement or that this device was tied up some way so that he could not use it.

Q. Leaving out your guess, would you in every other absence of any practical gun of this mechanism for five or six years, say that it was deemed a practical and useful invention by the inventor?

A. I would not draw any conclusion as to its practicability from these conditions.

343 Q. I will ask if Mr. Nordenfeldt's reputation has, in your judgment, anything to do with the question whether this particular patent represents a practical working device or not?

A. I think it has a great deal to do with it.

Q. And if the same device then were presented with the name of

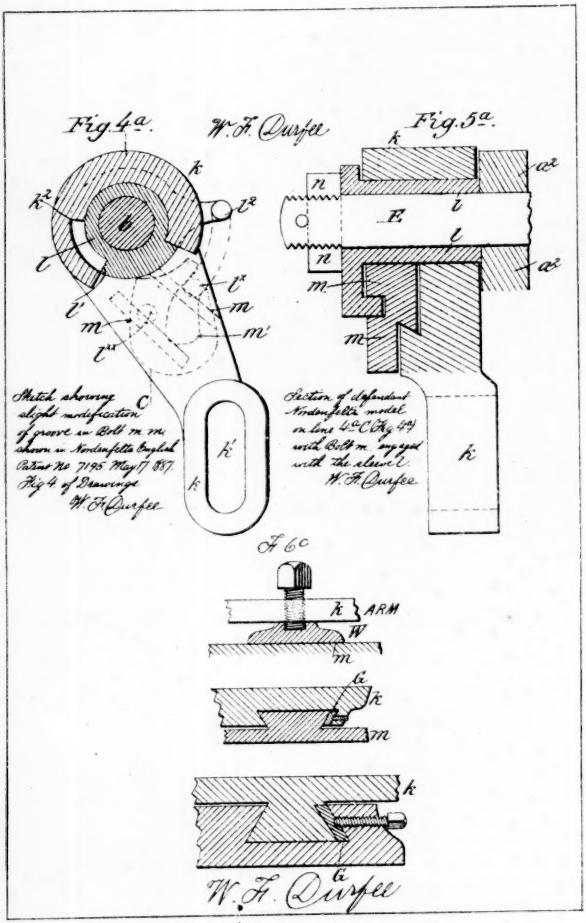

Exhibit - Sketches referred to in testimony of W. H. Durfee pp 195 and 199.

No 569.
Dashiell
v.
Grosvenor
et al
p 345

an unknown man, you would judge it differently from the manner from which you now judge it, knowing it as a device of Mr. Nordenfeldt's?

A. No, I should not judge it any differently.

Q. Well, does or does not Mr. Nordenfeldt's general reputation affect your judgment of this particular device?

A. Yes, I think Mr. Nordenfeldt's reputation as an engineer and mechanician gives me more confidence in this device than I should have if it were unsupported by such reputation.

Q. Now, you spoke on your redirect examination of the operation of the mechanism shown by the Seabury patent in suit, with reference to the part which friction played in that device. Are you to be understood as expressing the opinion that the Seabury device depends for its successful working on a counter-balance of one friction against another.

A. It does, most decidedly.

Q. In other words, it depends upon the preponderance of friction in one direction rather than another to cause the different operations to take place in their proper order?

A. Yes, sir.

Q. That is your judgment of the mechanism shown in the patent in suit?

A. Yes.

Q. And I understand you to say, in your judgment, that is true of the Seabury device as it is of this Nordenfeldt patent No. 7195?

A. Yes.

WILLIAM F. DURFEE.

344 DISTRICT OF COLUMBIA, *ss:*

I, Martin S. Decker, a notary public, in and for the District of Columbia, do hereby certify that the foregoing depositions of William F. Durfee and William I. Hough were taken before me, by consent of counsel, at the office of Messrs. Phillips & McKenney, room No. 23, in the Baltimore Sun building, 1317 F street, Washington, D. C., on the twenty-first day of October, A. D. 1893, and on the twenty-fourth day of April, A. D. 1894.

That the said William F. Durfee and William I. Hough were first duly sworn by me to tell the truth, the whole truth and nothing but the truth, touching the matters in controversy between the parties to the cause entitled James B. Grosvenor *et al. vs.* Robert B. Dashiell, in equity No. —, pending in the circuit court of the United States for the district of Maryland.

That the said depositions were reduced to writing under my direction, and after being first read over by the respective deponents, were by them subscribed in my presence.

In testimony whereof, I have hereunto set my hand and notarial seal, this fourth day of May, A. D. 1894.

MARTIN S. DECKER,

[SEAL.] *Notary Public, D. C.*

(Here follows diagram marked p. 345.)

346 & 347 *Testimony on Behalf of Complainant- in Rebuttal.*

United States Circuit Court, District of Maryland.

JAMES V. GROSVENOR *et al.*
vs.
ROBERT B. DASHIELL. } In Equity.

Testimony on the part of complainant- in rebuttal, taken by consent under the 67th rule in equity, as amended, at New York city on May 18th, 1894, before Wm. E. Zabrisbie, a notary public and special examiner *pro hac vice*.

Present: William G. Wilson, Esq., attorney for plaintiffs; S. F. Phillips, Esq., attorney for defendant.

HENRY F. NEWBURY, a witness recalled on behalf of the complainants, testifies in answer to interrogatories propounded by William G. Wilson, counsel for complainants, as follows:

1 Q. Are you the Henry F. Newbury who has heretofore testified in this cause?

A. I am.

2 Q. Have you read the deposition of William F. Durfee, a witness called on behalf of the defendant herein?

A. I have carefully read what I am informed is a correct copy of the deposition of the said witness, and have also examined the sketches referred to by him in his testimony.

3 Q. Please state whether or not you understand Defendant's Exhibit Nordenfeldt Model which is a model of what is shown and described in Defendant's Exhibit British Patent to Thorsten Nordenfeldt No. 7195 of 1887, and also Mr. Durfee's addition to such model, consisting of the thin piece of sheet metal mentioned in his deposition.

A. I carefully examined said Defendant's Exhibit Nordenfeldt Model in the office of defendant's counsel in Washington, D. C., as testified to by me in my former deposition, and I believe that I am familiar with the same, and that I also understand the addition made to such model by Mr. Durfee, which consists of a thin piece of sheet steel as testified to by him.

4 Q. Please state whether or not, in your opinion, the addition made to said Nordenfeldt model of the thin piece of sheet
348 steel by Mr. Durfee, or any of the other ways of adjusting the friction between the bolt *m* and the arm *k* as mentioned by him, would, if made in an actual breech-block operating mechanism of a rapid-fire gun constructed the same as said model is constructed, make such mechanism an operative one for the purpose of opening and closing the breech of such a gun.

A. In my opinion this addition of a thin piece of sheet steel one and a half one-thousandths of an inch in thickness made by Mr. Durfee to the said Nordenfeldt model would not, nor would any of the other ways of adjusting the friction between the bolt *m* and the

arm *k* as mentioned by Mr. Durfee, if made in a breech-block operating mechanism constructed as said model is constructed, make it an operative device or mechanism for opening and closing the breech of a rapid-fire gun.

The adjustment of the friction between the bolt *m* and the arm *k* in all of the ways suggested by Mr. Durfee, is made between two or more contacting surfaces which are incapable of automatically yielding in a direction to diminish or increase the amount of friction between such surfaces; or, in other words, such adjustment is dependent wholly upon maintaining a definite extent of contact of two or more working surfaces which are, so far as concerns the contact of such surfaces, fixed or immovably related to one another. This requires that the parts shall move with a given amount of friction and yet not too much to prevent their movement, or too little for them to move too freely, and because of this, it may be said that the friction has to be balanced or adjusted to a fine degree in order to maintain this balance between what would be too little or too much friction, when such device is placed in actual service. The amount of friction must be such that the bolt *m* will, during certain portions of the movement of the crank arm which acts upon such bolt, move it independently of the arm *k*, and during other portions of the movement of such crank arm the bolt *m* will remain stationary relatively to said arm *k*. This requires an exceedingly fine adjustment of the working surfaces and it is one that is practically impossible to maintain under the conditions of use of breech-block operating mechanisms.

As stated by me in my former deposition, a breech-block operating mechanism on a rapid-fire gun has to work under exceptional conditions. In the first place, such a mechanism has to withstand the shocks and jars of the explosion of the cartridge, which
349 as every one knows is exceptionally severe. To illustrate the destructive action of such shocks and jars I mention the fact that in the five-inch gun at the Sandy Hook proving ground, which has been testified about in this case, the breech-block tray is in the form of a ring, and this ring is idle and has no work to perform at the time the gun is fired, and has simply to sustain its own weight, yet it has been broken by the shocks and jars caused by the explosion of the cartridges, although it was made of the best malleable iron casting. Such shocks and jars would be destructive to any such nice balance or adjustment of friction as is caused by the insertion of the thin piece of sheet steel in the Nordenfeldt model, or in any of the other ways of adjusting the friction between the bolt *m* and the arm *k* referred to by Mr. Durfee.

In the next place, the breech-block mechanism has to be so constructed that it will work equally well whether the parts are of the normal temperature of the atmosphere or when they become heated by the transmission of the heat caused by the explosion of the cartridge to them through the medium of the metal composing the breech and the breech block and the breech-block operating mechanism. The parts composing the breech-block operating mechanism will not be heated to a uniform extent, but will be heated un-

evenly, because of the difference in the shape, size and location of the parts relatively to the atmosphere and the breech of the gun. Therefore there will be an unequal expansion of the parts. This unequal expansion of the different parts of the breech-block operating mechanism would, in my opinion, inevitably destroy any such nice adjustment of the friction between the bolt *m* and the arm *k* as would be required by any of the ways suggested by Mr. Durfee. If the parts composing the shaft or plate E, sleeve *l*, lever *k*, bolt *m*, hinge a^2 and nut *n* were fitted so as to have the fine adjustment or balance of friction mentioned by Mr. Durfee, and which he thinks would make the Nordenfeldt mechanism operative, then this unequal expansion of such parts would inevitably result either in causing those parts to become immovably connected together or to become so loose that they would be in substantially the condition of the Nordenfeldt model when Mr. Durfee first saw it, and he admits that it was inoperative.

Again, as explained in my previous deposition, breech-block operating mechanism for rapid-fire guns must have their parts
350 so proportioned that the presence of dirt or dust will not render them inoperative. The inevitable result of battle is that they become covered with dirt and gritty substances, which necessarily enters more or less between the working surfaces of the breech-block operating mechanism. The entrance of any dust, dirt or gritty substances between the working surfaces when made to move with the nice adjustment of friction described by Mr. Durfee would so increase the friction as to practically connect the parts together as one part, and this would render the mechanism wholly inoperative for the purposes of opening and closing the breech of the gun.

Again, breech-block operating mechanisms have to be manipulated by men when under the excitement of battle, and the mechanism which depends upon the nice adjustment or balance of friction set forth by Mr. Durfee would inevitably fail to operate when men under such excitement and working the mechanism as quickly as they possibly could, because they would apply the force to return the breech block too quickly and thus overcome the friction at a time not intended, which would cause the bolt *m* to move before it should do, and the whole thing would become inoperative.

Again, if a cartridge, owing to the gun becoming dirty, should stick and not be shoved home with the ordinary amount of force, and by reason of so sticking require a greater force to be applied to it through the breech block and the breech-block operating mechanism in order to force it home, then under this condition the bolts *m* would move before it should, and this would render the mechanism inoperative.

Because of all these facts, each and every one of which seems to have been entirely overlooked, I am clearly of the opinion that a breech-block operating mechanism constructed so that the parts would fit and have the fine degree of adjustment or balance of friction set forth by Mr. Durfee, would be wholly inoperative when put into use in battle.

I am familiar with all the ways of producing friction mentioned

by Mr. Durfee, and especially those illustrated in his sketches mentioned in his testimony, and I may say that I have known them for over thirty years. I never knew of any piece of machinery where it was designed to secure two pieces together so as to move as one part a portion of the time and then to separate and move as two parts, which was accomplished by the means of any of the devices mentioned by Mr. Durfee. I have carefully read Mr. Durfee's deposition, and he nowhere points out an instance of the use of means referred to by him in any such case as just described, and which is at all analogous to the case of the Nordenfeldt model. It is true that in lathes, milling machines and other places such devices are used as referred to by Mr. Durfee, but in no such case known to me are the parts connected together to move as one part a portion of the time and then are to become disconnected and move as separate parts in any of those machines. In fact, it is misleading to say that these devices referred to by Mr. Durfee are used for producing friction, although they do in fact cause friction as do any two parts which are brought in close contact one with the other. So far as I know, they are used to make what mechanics call a "close fit;" that is, a fit between two parts which will hold the movable part steady, or as nearly rigid as possible, and yet permit it to move. Such a fit cannot be maintained in breech-block operating mechanisms by the use of the devices referred to by Mr. Durfee. In other words, if such devices are used to produce friction, they are used to produce an equal amount of friction throughout the movement of the parts with which they are used, and not counter-balance of friction, as is necessary in the case of the Nordenfeldt model.

351

5 Q. Please state whether or not you agree with Mr. Durfee in that the mechanism shown and described in the Seabury patent in suit equally depends for its successful working on a counter-balance of one friction against another, as is the case with the Nordenfeldt model, as Mr. Durfee understands the same, and, in this connection, I will read you questions and answers from Mr. Durfee's testimony:

"Q. Now, you spoke on your redirect examination of the operation of the mechanism shown by the Seabury patent in suit with reference to the part which friction played in that device. Are you to be understood as expressing the opinion that the Seabury device depends for its successful working on a counter-balance of one friction against another?

"A. It does; most decidedly.

"Q. In other words, it depends upon the preponderance of friction in one direction rather than another to cause the different operations to take place in their proper order?

"A. Yes, sir.

"Q. That is your judgment of the mechanism shown in the patent in suit?

"A. Yes.

352

"Q. And I understand you to say, in your judgment, that is true of the Seabury device, as it is of this Nordenfeldt patent No. 7195?

"A. Yes."

A. I do not agree with Mr. Durfee in any such opinion. The portion of the redirect examination of Mr. Durfee, referred to in the first question just quoted, I understand to be that where he attempted to describe the breech block operating mechanism shown and described in the Seabury patent in suit. By turning to Mr. Durfee's testimony upon this point, it will be seen that he failed to mention the fact that the Seabury patent showed and described different forms of mechanism, by means of which the invention of that patent could be carried out. Mr. Durfee refers only to the form of mechanism shown in Figs. 1 to 6 of the patent in suit, and he is entirely silent as to that form of device shown in Figs. 7, 8, and 9 of that patent. In my former deposition in connection with the criticisms made by the defendant herein upon the Seabury patent in suit, I referred to these two forms of mechanism at length. The form of mechanism shown in Figs. 8 to 9 of the patent in suit contains a positive locking device, by means of which the crank arm and the breech-block retractor are positively locked together, so that during the desired portion of time that they shall move as one they are positively locked together, and at the time they are to separate and one move independently of each other they are positively unlocked. This form of mechanism is shown in Complainants' Exhibit Model D, an examination of which shows the fact to be as above stated.

The form of mechanism shown in Figs. 1 to 6 of the patent in suit is one which is not at all dependent upon the adjustment of two or more fixed or immovable working surfaces, as is the case with Mr. Durfee's suggested Nordenfeldt device. Nor is it one which would be rendered inoperative under any of the conditions which would render Mr. Durfee's suggested Nordenfeldt device wholly inoperative as explained by me in a previous answer. For instance, the Seabury mechanism would be just as operative and would not be to any material extent affected by the unequal expansion of the parts of such mechanism by the heat caused by the explosion of the cartridge.

It would also not be rendered inoperative or be materially affected by the shocks and jars caused by the discharge of the gun.

353 It would not be rendered inoperative or be materially affected by the presence of dirt, dust or gritty substances thrown into the mechanism during use when in battle.

Again, it is one which would not be rendered inoperative or be materially affected by the use of the same by men when under the excitement of battle.

The spring referred to by Mr. Durfee and which he says is essential in its operation, can be made of any desired strength and tension for any desired use, and because of this fact the crank arm will not become disconnected from the retractor, until the breech block and carrier are positively stopped against further movement. The spring in the Seabury mechanism of Figs. 1 to 6 permits the two working surfaces to yield or move relatively to each other so that any dirt or gritty substance cannot materially affect the working of the parts.

For this same reason the working of the parts cannot be materially affected by the unequal expansion of the parts by the heat generated by the discharge of the gun, or from the shocks or jars also caused by such discharge. It is true that the spring causes friction between the parts, but while this is the case, it is not that character of friction which is produced by the introduction of the thin piece of sheet steel in the model of the Nordenfeldt mechanism, or which would be produced by any of the suggested ways of adjusting the friction between the bolt *m* and the arm *k*. The device illustrated in Figs. 1 to 6 of the Seabury patent in suit and to which Mr. Durfee directed his attention is one adapted for use under the conditions which prevail in breech-block operating mechanism of rapid-fire guns, while the introduction of a thin piece of sheet steel in the Nordenfeldt model or any construction of that mechanism, suggested by Mr. Durfee, would be wholly unfitted for that purpose, and would of itself render such mechanism inoperative and utterly worthless, and for the reasons heretofore stated.

5 Q. Please state whether or not you agree with Mr. Durfee, that it was the intention of the patentee Nordenfeldt to construct the mechanism shown and described in Defendant's Exhibit British Patent to Thorsten Nordenfeldt, No. 7195 of 1887, with such closeness of fitting of the parts as would produce the adjustment or counter-balance of friction between the bolt *m* and arm *k* mentioned by him?

A. I cannot agree with Mr. Durfee in that Mr. Nordenfeldt had any intention of constructing the mechanism with any such closeness of fit as would produce the fine adjustment or counter-balance of friction between the bolt *m* and the arm *k* as mentioned by him.

354 In the first place, there is no such intention found set forth in the patent itself. In the second place, any such closeness of fitting which would produce the adjustment or counter-balance of friction mentioned by Mr. Durfee would, of itself, be fatal to the operation of a breech-block operating mechanism for rapid-fire guns, and for the reasons heretofore stated, it being sufficient to say that the unequal expansion of the parts, caused by the heat generated by the discharge of the gun would alone render such a mechanism inoperative. Because of these facts I cannot for a moment believe that it was the intention of Mr. Nordenfeldt to make any such closeness of fit. If he had intended that this should be the case, he would undoubtedly have made it plain in the specification.

6 Q. I call your attention to Mr. Durfee's sketch, Fig. 4*a*, and to that part of his testimony wherein he refers to the enlargement of the slot in the bolt *m* for the reception of the stud l^2, and ask you whether or not, in your opinion, such a construction as described by Mr. Durfee and illustrated in said sketch would render the Nordenfeldt mechanism operative?

A. In my opinion such an enlargement of the groove for the reception of the stud l^2 would not render that mechanism operative, because, if the parts were made so as otherwise to be operative under the conditions necessarily present when such mechanisms are used

"A. Yes."

A. I do not agree with Mr. Durfee in any such opinion. The portion of the redirect examination of Mr. Durfee, referred to in the first question just quoted, I understand to be that where he attempted to describe the breech-block operating mechanism shown and described in the Seabury patent in suit. By turning to Mr. Durfee's testimony upon this point, it will be seen that he failed to mention the fact that the Seabury patent showed and described different forms of mechanism, by means of which the invention of that patent could be carried out. Mr. Durfee refers only to the form of mechanism shown in Figs. 1 to 6 of the patent in suit, and he is entirely silent as to that form of device shown in Figs. 7, 8, and 9 of that patent. In my former deposition in connection with the criticisms made by the defendant herein upon the Seabury patent in suit, I referred to these two forms of mechanism at length. The form of mechanism shown in Figs. 8 to 9 of the patent in suit contains a positive locking device, by means of which the crank arm and the breech-block retractor are positively locked together, so that during the desired portion of time that they shall move as one they are positively locked together, and at the time they are to separate and one move independently of each other they are positively unlocked. This form of mechanism is shown in Complainants' Exhibit Model D, an examination of which shows the fact to be as above stated.

The form of mechanism shown in Figs. 1 to 6 of the patent in suit is one which is not at all dependent upon the adjustment of two or more fixed or immovable working surfaces, as is the case with Mr. Durfee's suggested Nordenfeldt device. Nor is it one which would be rendered inoperative under any of the conditions which would render Mr. Durfee's suggested Nordenfeldt device wholly inoperative as explained by me in a previous answer. For instance, the Seabury mechanism would be just as operative and would not be to any material extent affected by the unequal expansion of the parts of such mechanism by the heat caused by the explosion of the cartridge.

It would also not be rendered inoperative or be materially affected by the shocks and jars caused by the discharge of the gun.

353 It would not be rendered inoperative or be materially affected by the presence of dirt, dust or gritty substances thrown into the mechanism during use when in battle.

Again, it is one which would not be rendered inoperative or be materially affected by the use of the same by men when under the excitement of battle.

The spring referred to by Mr. Durfee and which he says is essential in its operation, can be made of any desired strength and tension for any desired use, and because of this fact the crank arm will not become disconnected from the retractor, until the breech block and carrier are positively stopped against further movement. The spring in the Seabury mechanism of Figs. 1 to 6 permits the two working surfaces to yield or move relatively to each other so that any dirt *of* gritty substance cannot materially affect the working of the parts.

For this same reason the working of the parts cannot be materially affected by the unequal expansion of the parts by the heat generated by the discharge of the gun, or from the shocks or jars also caused by such discharge. It is true that the spring causes friction between the parts, but while this is the case, it is not that character of friction which is produced by the introduction of the thin piece of sheet steel in the model of the Nordenfeldt mechanism, or which would be produced by any of the suggested ways of adjusting the friction between the bolt *m* and the arm *k*. The device illustrated in Figs. 1 to 6 of the Seabury patent in suit and to which Mr. Durfee directed his attention is one adapted for use under the conditions which prevail in breech-block operating mechanism of rapid-fire guns, while the introduction of a thin piece of sheet steel in the Nordenfeldt model or any construction of that mechanism, suggested by Mr. Durfee, would be wholly unfitted for that purpose, and would of itself render such mechanism inoperative and utterly worthless, and for the reasons heretofore stated.

5 Q. Please state whether or not you agree with Mr. Durfee, that it was the intention of the patentee Nordenfeldt to construct the mechanism shown and described in Defendant's Exhibit British Patent to Thorsten Nordenfeldt, No. 7195 of 1887, with such closeness of fitting of the parts as would produce the adjustment or counter-balance of friction between the bolt *m* and arm *k* mentioned by him?

A. I cannot agree with Mr. Durfee in that Mr. Nordenfeldt had any intention of constructing the mechanism with any such closeness of fit as would produce the fine adjustment or counter-balance of friction between the bolt *m* and the arm *k* as mentioned by him.

354 In the first place, there is no such intention found set forth in the patent itself. In the second place, any such closeness of fitting which would produce the adjustment or counter-balance of friction mentioned by Mr. Durfee would, of itself, be fatal to the operation of a breech-block operating mechanism for rapid-fire guns, and for the reasons heretofore stated, it being sufficient to say that the unequal expansion of the parts, caused by the heat generated by the discharge of the gun would alone render such a mechanism inoperative. Because of these facts I cannot for a moment believe that it was the intention of Mr. Nordenfeldt to make any such closeness of fit. If he had intended that this should be the case, he would undoubtedly have made it plain in the specification.

6 Q. I call your attention to Mr. Durfee's sketch, Fig. 4*a*, and to that part of his testimony wherein he refers to the enlargement of the slot in the bolt *m* for the reception of the stud l^2, and ask you whether or not, in your opinion, such a construction as described by Mr. Durfee and illustrated in said sketch would render the Nordenfeldt mechanism operative?

A. In my opinion such an enlargement of the groove for the reception of the stud l^2 would not render that mechanism operative, because, if the parts were made so as otherwise to be operative under the conditions necessarily present when such mechanisms are used

in battle, this change would not render such mechanisms operative. The crank arm when moved quickly would move a short distance without contact with anything, owing to the enlargement of the slot, and consequently would strike the opposite side of the slot with a blow which would at once start the bolt *m* backward, notwithstanding the difference in the position of the stud l^2 relatively to the side of such enlarged slot and the ways in which the bolt *m* moves.

This sketch of Mr. Durfee is, to say the least, misleading: because the parts can never be brought into the positions they are assumed to have in said sketch, as, for instance, the stud l^2 cannot be made to assume the position indicated by l^{2} as it is shown to assume in Mr. Durfee's sketch.

HENRY F. NEWBERRY.

Taken by consent of solicitors, and by the witness subscribed and sworn to before me.

WM. E. ZABRISKIE.

(No Model.) 3 Sheets—Sheet 1.

S. SEABURY.

BREECH LOADING CANNON.

No. 425,584. Patented Apr. 15, 1890.

Fig. 1.

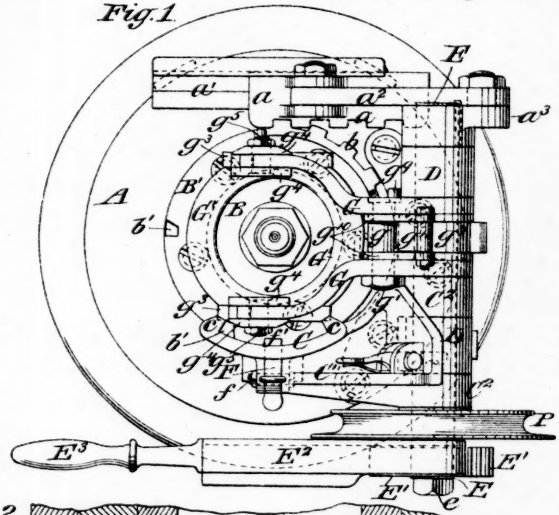

Fig. 2.

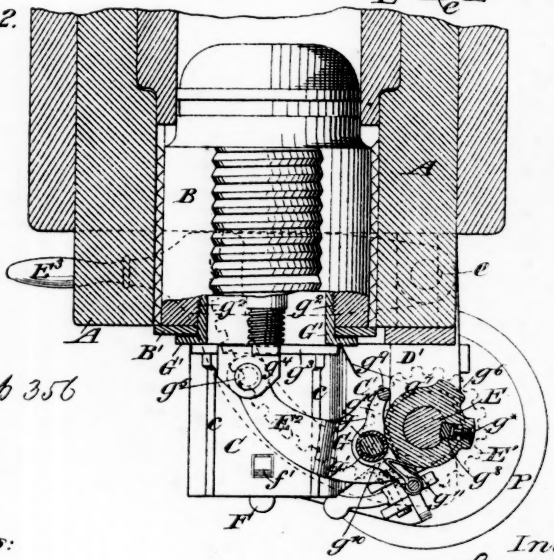

No. 569.
Dashiell
v.
Grosvenor
p 356

Witnesses:
C. E. Sundgren
L. Hu Bicket

Inventor:
Samuel Seabury
by attorney
Thomas Griswold

(No Model.) 6 Sheets—Sheet 2.

S. SEABURY.

BREECH LOADING CANNON.

No. 425,584. Patented Apr. 15, 1890.

Fig. 3.

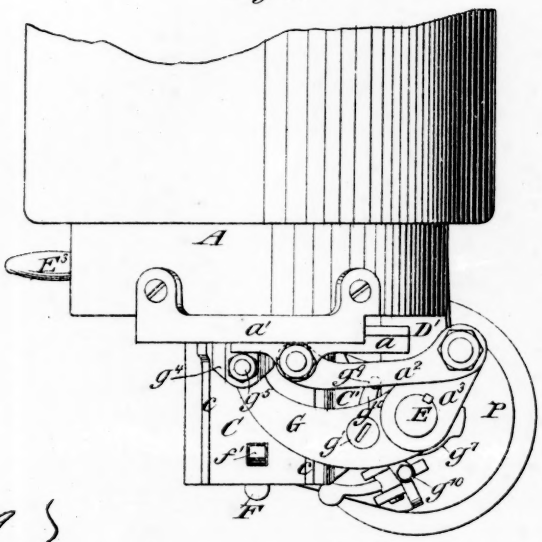

No. 569
Dashiell
v.
Grosvenor
p. 358

Witnesses:
C. E. Sundgren
John Bicket

Inventor:
Samuel Seabury
by attorneys
Brown & Griswold

(No Model.) 6 Sheets—Sheet 3.

S. SEABURY.

BREECH LOADING CANNON.

No. 425,584. Patented Apr. 15, 1890.

Fig. 4.

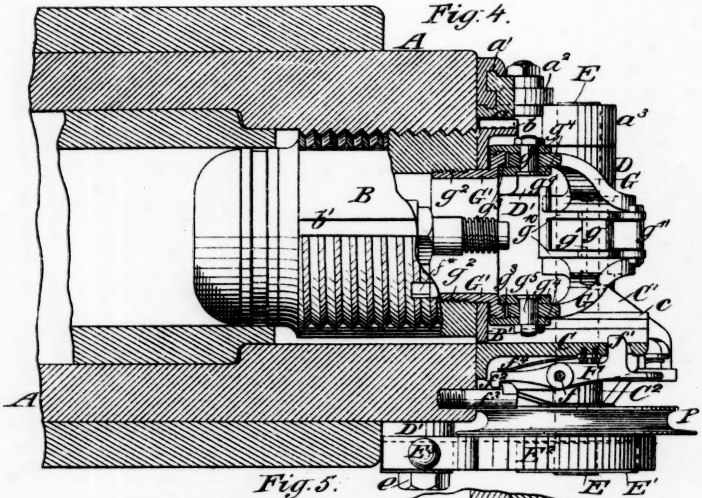

Fig. 5.

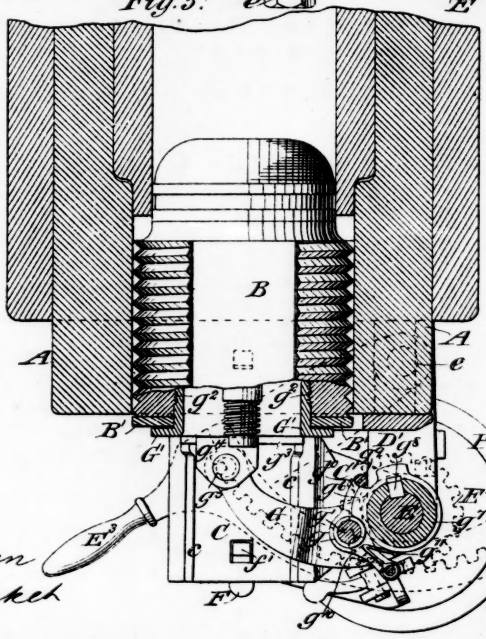

No. 569.
Dashiell
v.
Grosvenor
p. 360

Witnesses
C. E. Sundgren
John Bickel

Inventor
Samuel Seabury
by attorneys
Brown & Griswold

(No Model.) 6 Sheets—Sheet 4.

S. SEABURY.

BREECH LOADING CANNON.

No. 425,584. Patented Apr. 15, 1890.

Fig. 6.

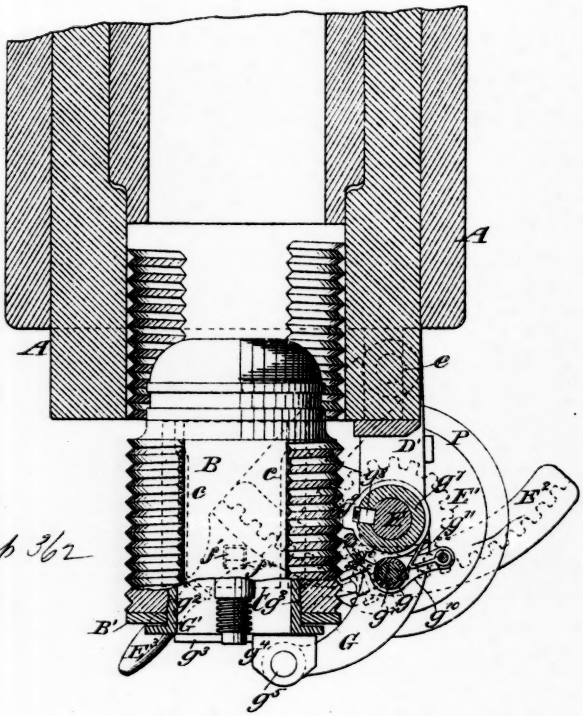

No. 569.
Darkwell
v
Governor
p 362

Witnesses:
C. E. Sundgren
John Bickel

Inventor:
Samuel Seabury
by attorneys
Brown & Griswold

(No Model.) 6 Sheets—Sheet 5

S. SEABURY.

BREECH LOADING CANNON.

No. 425,584. Patented Apr. 15, 1890.

Fig. 6.

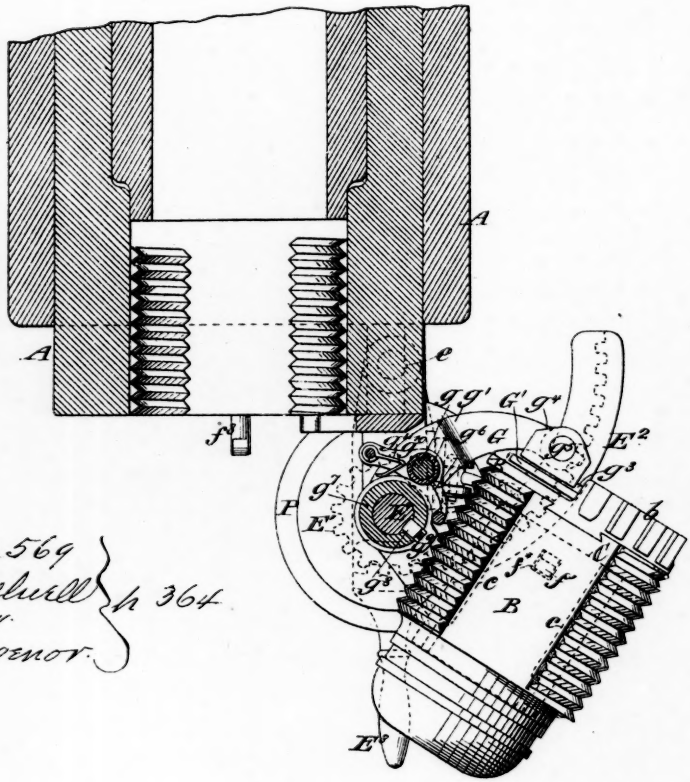

No 569
Dashiell } h 364
v.
Grosvenor.

Witnesses:
C. Thundgren
John Bickett.

Inventor:
Samuel Seabury
by attorneys
Brown & Griswold

(No Model.) 6 Sheets—Sheet 6.

S. SEABURY.

BREECH LOADING CANNON.

No. 425,584. Patented Apr. 15, 1890.

Fig. 7.

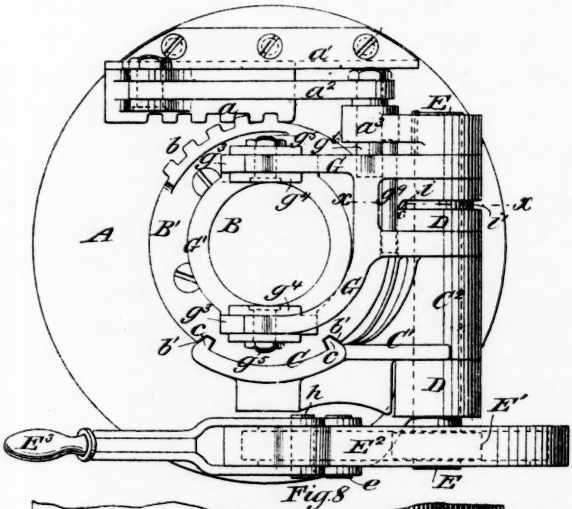

Fig. 8

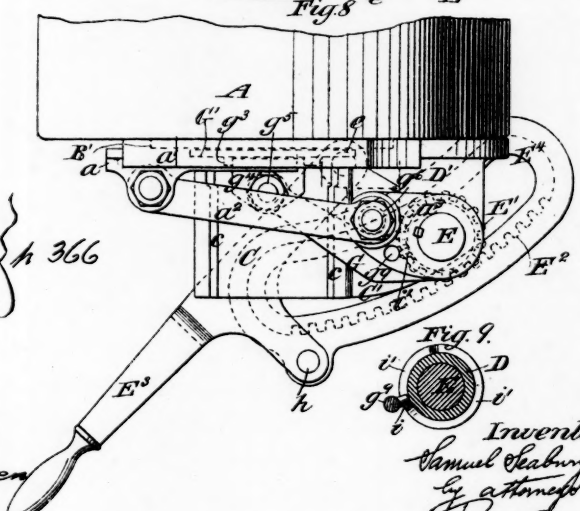

Fig. 9.

No 569
Dashiell
v.
Grosvenor.
} p 366

Witnesses:
C. E. Sundgren
L. Ken Dicker

Inventor
Samuel Seabury
by attorneys
Brown & Griswold

367 UNITED STATES PATENT OFFICE.

SAMUEL SEABURY, of the United States Navy.

Breech-loading Cannon.

Specification forming part of Letters Patent No. 425,584, dated April 15, 1890. Application filed July 19, 1889. Serial No. 318,056. (No model.)

To all whom it may concern:

Be it known that I, Samuel Seabury, lieutenant United States Navy, residing at Bergen Point, in the county of Hudson and State of New Jersey, have invented a new and useful improvement in breech-loading cannon, of which the following is a specification, reference being had to the accompanying drawings.

This improvement relates to breech-loading cannon in which a screw breech-block, which is withdrawn in a rearward direction, is employed, with a swinging carrier or receiver hinged to one side of the breech of the gun, and into which the breech-block is withdrawn, and which serves as a guide for directing the breech-block into and from its seat in the breech and as a support for the breech-block while out of the gun. In such a gun there are three movements necessary to open the breech—namely, first, the turning of the breech-block to unlock it; second, the withdrawal of the breech-block backward into the receiver, and, third, the swing aside of the receiver with the breech-block in it. These three movements have hitherto been separately performed by hand, the breech-block having been first turned to unlock it by hand and then pulled by hand back into the receiver, and the receiver having been then swung aside by hand with the breech-block in it to open the breech.

The object of this improvement is to provide for the more rapid working, loading, and firing of such breech-loading cannon by effecting all these movements in succession by a continuous movement of a single lever.

I will first describe my improvement with reference to the drawings, and afterward point out its novelty in claims.

(Here follow diagrams marked pp. 356, 358, 360, 362, 364, & 366.)

Figure 1 is a rear view of the breech of a cannon and of the breech-block, swinging breech-block carrier, and mechanism for operating said breech-block carrier embodying my invention. Fig. 2 represents a horizontal sectional view corresponding with Fig. 1, taken in a plane coincident with the axis of the bore, but showing the exterior of the greater portion of the length of the breech-block. Fig. 3 is a plan view corresponding with Figs. 1 and 2. Fig. 4 represents a vertical section corresponding with Figs. 1, 2, and 3. The figures above mentioned all show the breech in its closed and

(No Model.) 6 Sheets—Sheet 6.

S. SEABURY.

BREECH LOADING CANNON.

No. 425,584. Patented Apr. 15, 1890.

Fig. 7.

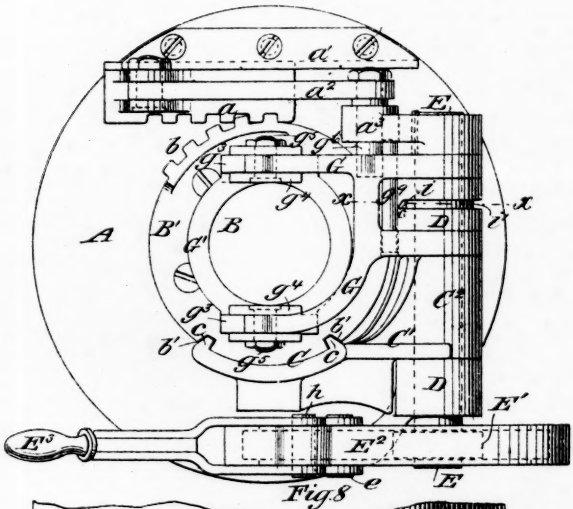

Fig. 8

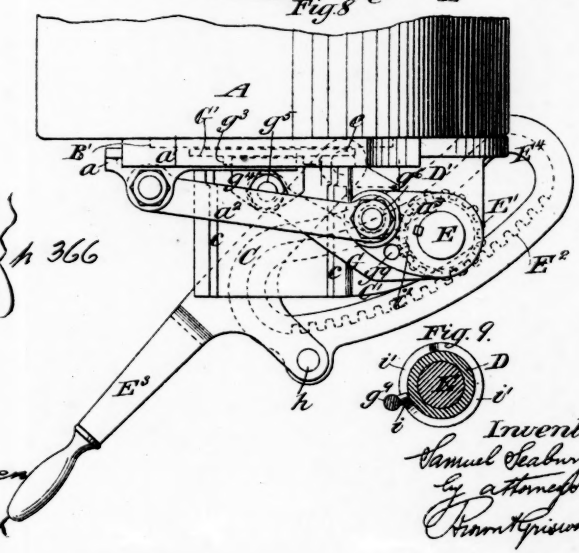

Fig. 9.

No 569
Dashiell
v.
Grosvenor
p 366

Witnesses:
C. E. Sundgren
L. Kirk Bicker

Inventor
Samuel Seabury
by attorneys
Brown & Griswold

367 UNITED STATES PATENT OFFICE.

SAMUEL SEABURY, of the United States Navy.

Breech-loading Cannon.

Specification forming part of Letters Patent No. 425,584, dated April 15, 1890. Application filed July 19, 1889. Serial No. 318,056. (No model.)

To all whom it may concern:

Be it known that I, Samuel Seabury, lieutenant United States Navy, residing at Bergen Point, in the county of Hudson and State of New Jersey, have invented a new and useful improvement in breech-loading cannon, of which the following is a specification, reference being had to the accompanying drawings.

This improvement relates to breech-loading cannon in which a screw breech-block, which is withdrawn in a rearward direction, is employed, with a swinging carrier or receiver hinged to one side of the breech of the gun, and into which the breech-block is withdrawn, and which serves as a guide for directing the breech-block into and from its seat in the breech and as a support for the breech-block while out of the gun. In such a gun there are three movements necessary to open the breech—namely, first, the turning of the breech-block to unlock it; second, the withdrawal of the breech-block backward into the receiver, and, third, the swing aside of the receiver with the breech-block in it. These three movements have hitherto been separately performed by hand, the breech-block having been first turned to unlock it by hand and then pulled by hand back into the receiver, and the receiver having been then swung aside by hand with the breech-block in it to open the breech.

The object of this improvement is to provide for the more rapid working, loading, and firing of such breech-loading cannon by effecting all these movements in succession by a continuous movement of a single lever.

I will first describe my improvement with reference to the drawings, and afterward point out its novelty in claims.

(Here follow diagrams marked pp. 356, 358, 360, 362, 364, & 366.)

Figure 1 is a rear view of the breech of a cannon and of the breech-block, swinging breech-block carrier, and mechanism for operating said breech-block carrier embodying my invention. Fig. 2 represents a horizontal sectional view corresponding with Fig. 1, taken in a plane coincident with the axis of the bore, but showing the exterior of the greater portion of the length of the breech-block. Fig. 3 is a plan view corresponding with Figs. 1 and 2. Fig. 4 represents a vertical section corresponding with Figs. 1, 2, and 3. The figures above mentioned all show the breech in its closed and

locked position. Fig. 5 is a horizontal sectional view corresponding with Fig. 2, except that it shows the breech-block unlocked. Fig. 6 is a horizontal sectional view showing the breech-block withdrawn from its seat in the breech, but not yet thrown aside to open the breech for loading. Fig. 6* is a horizontal sectional view which shows the breech-block and its carrier thrown aside to the position to leave the breech open for loading. Fig. 7 is a rear view illustrating a modification of the mechanism for operating the breech-block and carrier. Fig. 8 is a plan corresponding with Fig. 7. Fig. 9 is a detail view to be hereinafter explained.

Similar letters of reference designate corresponding parts in all the figures.

I will first describe the example of my invention as illustrated by Figs. 1 to 6*, inclusive.

A designates the breech of the gun, and B the breech-block. The block is represented as having upon its exterior a mutilated screw-thread corresponding with a mutilated screw-thread in the breech to permit the block to be moved in and out of the breech and to be locked therein by turning it.

C C′ C² designate the breech-block carrier, consisting of a tray C, an arm C′ to which said tray is solidly attached, and two sockets C², provided on the said arm, the said sockets forming portions of the hinge by which the said carrier is hinged to the breech of the gun at one side thereof. Other portions of the hinge consist of sockets D, formed in brackets D′, secured to the breech of the gun at one side thereof, and a spindle E, which passes through the said sockets C² and D, and for which the said sockets D D constitute bearings. The said spindle is free to turn in the said sockets within certain limits, as will be hereinafter explained. The tray C conforms internally to the exterior of the breech-block and to the contour of the unmutilated portion of the screw thereof, and has at its sides longitudinal parallel tongues *c*, which correspond with grooves *b′* in the breech-block, which said grooves *b′* are brought exactly opposite to the said tongues *c* of the tray when the breech-block is turned to the position in which it is unlocked, so
368 that when the breech-block is drawn back it may run backward in the tray in a direction exactly parallel with the bore of the gun, the breech-block carrier and its tray being then locked, as shown in Figs. 2 and 4, to the breech of the gun and forming a continuation of the lower part of the breech-seat. The locking of the tray to the barrel is effected by means of a lever-like double catch F, which is pivoted by a pin *f* to the bottom of the tray. This double catch or lever has at its rear an upward projection *f′*, which passes through a hole in the tray, and it has at its front end a downward projection *f²*, which engages with a hooked bolt *f³* fast in the lower part of the breech of the gun, a spring *f⁴* being applied between the tray and the forward part of the said lever-like catch to keep the projection *f²* in engagement with the hooked bolt *f³* until it is required to be disengaged.

The breech-block, the breech-block carrier, and the means of locking the carrier to the breech of the gun, so far as I have de-

scribed them, are like those in common use. I will now proceed to describe my improvement whereby their more rapid operation is effected.

B′ is a circular plate secured to the rear end of the breech and having upon it a toothed flange b, which is concentric with the breech-block and which gears with a straight-toothed rack a, which is fitted to run in a slideway a', firmly secured to the back of the breech for the purpose of giving the breech-block the movement on its axis necessary to lock and unlock it from its seat in the gun. This rack a is connected by a rod a^2 with a crank arm a^3, which is fastened upon the upper end of the spindle E. The lower end of the spindle has upon it a toothed pinion E′, through which it is turned to produce the movement of the arm a^3 and rod a^2, by which the rack a is made to operate upon the toothed flange b to turn the breech-block, in one direction or the other, the pinion E′ being for this purpose geared with a curved rack E^2 on a hand-lever E^3, which works horizontally on a fulcrum-pin e, secured to the lower part of the breech of the gun on the same side with the spindle E and at some distance forward of the latter.

G G designate two arms, which are fitted loosely to the spindle E between the sockets D and C^2 of the hinge. These arms are secured together and kept at a proper distance apart by means of an interposed sleeve g and a pin g', passing through said sleeve and fastened by a nut, which makes the said arms practically a single-forked arm. The forked ends of the said arms are connected with the breech-block in such manner that by the turning of the arms G about the axis of the spindle E the breech-block may be drawn back into the tray by the said arms and be permitted to move in a direction parallel with the bore of the gun until entirely withdrawn from its seat in the breech. The connection shown between the said arms and the breech-block consists of a flanged ring G′, which is screwed, as shown at g^2, Figs. 2, 4, 5, and 6, into a concentric cavity in the rear of the breech-block, horizontal slideways g^3, fast upon the rear of said ring, and slides g^4, fitted to slide on said slideways and pivoted by pins g^5 to the ends of the said arms. This sliding connection between the arms G and the breech-block permits the breech-block to move back in lines parallel with the bore and permits the turning of the breech-block in its seat to lock and unlock it. The screw-threads of the ring G′ from a permanent connection between the said ring and the block, yet permit the aforesaid turning movement of the block while the ring remains stationary. The screw-thread g^2 is made so fine that the small amount of movement—say one-sixth of a revolution—given to the breech-block does not materially disturb the proper connection between the said ring and the block. The arms G, the ring G′, and the above-described connections between them constitute what may be termed a "breech-block retractor."

The breech-block retractor is operated to withdraw the breech-block by a projection g^6 from the spindle E acting against the arm or arms G of the retractor. In the example of the invention shown in Figs. 1, 2, 3, 4, 5, and 6 this projection g^6 is formed on a collar g^7,

which is keyed rigidly to the spindle by a key g^8, fitted to mortises in the spindle and the collar, the length of said key being equal to the thickness or depth of the collar, and the mortise in the spindle being only of the same length, so that the key serves also to confine the spindle lengthwise in the hinge. The key so applied is capable of being withdrawn from its mortise in the spindle by a screw g^* (shown in Fig. 2) for the purpose of liberating the spindle when desired to remove it lengthwise. The projection g^6 acts against the portion of the retractor constituted by the sleeve g. It is so arranged relatively to the arm a^3, by which the breech-block is turned to lock and unlock it, that in turning the spindle E to unlock the breech-block the projection g^6 does not come in contact with the arm G to withdraw the breech-block until after the breech-block has been unlocked and brought to a position in which its grooves b' are opposite the tongues c of the breech-block carrier.

The first part of the movement of the breech-block retractor produced by the operation of the projection g^6 on the arm of the retractor brings the breech-block back into the tray C of the receiver to a position in which it is locked in the said receiver by means of the upward projection f' on the spring-actuated double catch f entering a notch f^*, (shown in Fig. 4 and dotted in Figs. 6 and 6*,) provided in the breech-block, the said catch having been previously unlocked from the fixed hook-bolt f^3 by a beveled rear portion of the breech-block passing over the said upward projection f', and so depressing the rear end of the said catch and lifting its front end from the hook of said bolt f^3. When the notch f^* arrives over the projection f', the said projection is caused to enter it by the downward pressure of the spring f^4 on the front end of the said catch. This method of locking and unlocking the receiver to and from the breech and of locking the breech-block to the receiver is well known and not of itself a part of this invention. The locking of the breech-block in the receiver thus effected also secures the breech-block retractor to the receiver, so that the continued movement of the retractor effected by the projection g^6 also produces the movement of the carrier. The breech-block and the retractor then being locked together, all move together, and the breech is taken from the position shown in Fig. 5 first to the position shown in Fig. 6 in bold outline and afterward to the position shown in Fig. 6*, leaving the breech of the gun open for loading. The return movement of the breech-block carrier, breech-block retractor, and breech-block is effected by the action of the projection g^6 against the trip-pin g^9, which, as shown in Figs. 1, 2, 3, 4, and 5, is formed upon one end of a stirrup-like or double lever g^{10}, which works upon the sleeve g, hereinbefore mentioned, and to the other end of which is attached a spring g^{11}, (best shown in Figs. 5 and 6,) which presses against the outside of the collar g^7 in such manner as to throw out that end of the lever and throw the trip-pin g^9 toward the collar g^7. As the projection g^6 moves with the spindle E from the position shown in Fig. 2, which it occupies when the breech-block is closed and locked, to the position shown in Fig. 5, which it occupies after the breech-block has been unlocked, the said projection trips the said pin g^9 or

369

pushes it aside, so that it is inoperative, and after the said projection passes by the said pin the latter passes in front of the said projection, as shown in Fig. 5, so that when the spindle E is turned back the projection g^6 acts against the said trip-pin, and through it on the retractor to return the carrier to the breech and to produce the continued movement of the retractor to push the breech-block from the carrier into the breech of the gun.

It may be understood that by a single continuous backward movement of the lever E^3 from the position shown in dotted outline in Fig. 2 the breech-block is first turned to unlock it, is afterward drawn back by the retractor into the receiver, and after that the breech-block, retractor, and receiver are all thrown aside together to leave the breech open. The return movement of the said lever first returns the carrier and retractor to the position shown in Fig. 6, with the breech-block opposite to and in alignment with the bore of the gun, afterward continues the movement of the retractor to push the breech-block into its seat in the gun, and finally produces the turning movement of the breech-block, by which it is locked.

The modification of my improvement shown in Figs. 7, 8, and 9 differs from the example shown in Figs. 1, 2, 3, 4, 5, 6, and 6* very slightly, one essential difference being in the construction or mode of applying the rack E^2 to the lever E^3 and in the construction and means of actuating the trip-pin g^9. The rack E^2, (shown in Figs. 7 and 8,) instead of being rigidly connected with the lever E^3, is pivoted to the said lever by a pin h near one end and is made to form part of a yoke E^4, and it works upon the spindle E as a guide. The trip-pin g^9 (shown in Figs. 7, 8, and 9, of which figures the last mentioned represents a horizontal section in the line $x\ x$ of Fig. 7) is fitted to slide up and down in the arm G of the breech-block retractor, a lateral projection i on the said pin working in a cam-like groove i' (see Figs. 7 and 9) in one of the stationary hinge-sockets D, and the equivalent of the projection g^6 of the first-described example is found in a downward extension of the pin g^8, which connects the crank-arm with the rod a^2. This downward extension acts against the upper arm G of the breech-block retractor to draw back the latter after the breech-block has been unlocked, the trip-pin g^9 being during the unlocking held down in the lower part of the cam-groove i' out of engagement with the crank-arm a^3. As the pin g^6 begins to move the retractor-arm, the pin g^9, moving with the said arm, is moved up into a corresponding hole in the crank-arm a^3, and the crank-arm and the retractor-arm remain engaged by the said pin g^9 during the rest of the backward or opening movement of the retractor and breech-block carrier and also during the return or closing-movement, the latter movement being effected entirely through the pin g^9. As the return movement is completed, the pin g^9 is tripped out of the crank-arm a^3 by its projection i passing down into the lower part of the cam-groove i' and the crank-arm left free to operate the rack a to lock the breech-block.

I have shown on the lower part of the spindle below the hinge (see Figs. 3, 4, 5, and 6) a pulley P, for the purpose of producing the automatic operations of the breech-block retractor and breech-

block carrier by the recoil or counter-recoil of the gun, for which purpose the said pulley would be connected by a wire rope or its equivalent with some suitable portion of the gun-carriage.

What I claim as my invention, and desire to secure by letters patent, is—

1. The combination, with a breech-loading cannon and a breech-block for the same, which is withdrawn in a rearward direction, of a breech-block carrier hinged to the breech, and a breech-block retractor hinged to the breech separate from said carrier to move independently of said carrier to draw the breech-block thereinto and push it therefrom, but capable of moving with said carrier while the breech-block is therein, substantially as herein set forth.

370 2. The combination, with a breech-loading cannon and a breech-block for the same, which is withdrawn in a rearward direction, of a breech-block carrier by which the breech-block after withdrawal is moved aside out of the way of the breech, a breech-block retractor for withdrawing the breech-block from the breech into the said carrier, and a spindle supported in bearings attached to the breech and constituting a pivot upon which the said breech-block carrier and breech-block retractor are capable of separate movements, substantially as herein set forth.

3. The combination, with a breech-loading cannon and a breech-block for the same, which is locked and unlocked by turning it in the breech and is withdrawn in a rearward direction, of a breech-block carrier hinged to the breech, a breech-block retractor, also hinged to the breech, but capable of moving independently of said carrier, a locking-device for locking the breech-block, the said carrier, and the said retractor together, a pivotal spindle common to the hinges of the said carrier and retractor, a crank-arm on said spindle geared with the breech-block for turning it, and a driving projection on said spindle for actuating the said retractor, and through it the carrier, the said projection being arranged with a lost motion between it and the retractor, substantially as and for the purpose herein set forth.

4. The combination, with a breech-loading cannon, a breech-block for the same, which is locked and unlocked by turning it in the breech, a swinging breech-block carrier hinged to the breech, and a spindle which forms the pivot of the hinge of the said carrier, of a toothed rack geared with the said breech-block, and a crank-arm on said spindle connected with said rack to produce the turning of the breech for locking and unlocking it, substantially as herein described.

5. The combination, with a breech-loading gun and a mutilated-screw breech-block for the same, of a breech-block retractor consisting of, first, an arm; second, a hinge by which said arm is connected with the breech of the gun; third, a ring screwed into the breech-block, and, fourth, a sliding connection between the said arm and ring, a pivot-spindle for said hinge engaging with said arm with a lost motion, a pinion on said pivot, a toothed rack geared with said pinion, and a lever for carrying said rack, said lever having its

fulcrum on the breech of the gun, substantially as and for the purpose herein described.

6. The combination, with a breech-loading cannon, a breech-block for the same, which is locked and unlocked by turning it in the breech and is withdrawn in a rearward direction, and the breech-block retractor having a swinging arm which is hinged to the breech and in which the breech-block is capable of turning, of a spindle constituting the pivot of the hinge of the said retractor, and having a rigid projection for acting upon the swinging arm of the retractor with a lost motion to withdraw the breech-block, and a trip-pin attached to said arm to engage with said projection for the return movement of the retractor, but to be tripped during the withdrawing movement, substantially as herein set forth.

SAMUEL SEABURY.

Witnesses:
FRED'K HAYNES.
D. HOWARD HAYWOOD.

371 COMPLAINANTS' EXHIBIT LETTER NO. 1. S. A. B., Commissioner.

Subject: Breech mechanism, 6" B. L. R.

BUREAU OF ORDNANCE, NAVY DEPARTMENT,
WASHINGTON CITY, *Sept. 29th*, 1890.

In reply refer to No. 25666.

Lieut. Sam'l Seabury, room 37, post-office building, New York city.

SIR: The bureau has received the plans and description of your breech mechanism for a 6" B. L. R., and has carefully examined them.

While recognizing the merits of your design, the bureau has other designs, developed by its assistants, which it considers superior in some respects, and it has, therefore, concluded not to adopt your design, but to hold it as an alternative plan and a possible future trial and use.

I am, sir, your obed't serv't,

WM. M. FOLGER,
Chief of Bureau.

B.

372 COMPLAINANTS' EXHIBIT LETTER NO. 2. S. A. B., Commissioner.

Subject: Blue prints.

BUREAU OF ORDNANCE, NAVY DEPARTMENT,
WASHINGTON CITY, *Nov. 28th*, 1891.

In reply refer to No. —.

Lieutenant Samuel Seabury, room 160, post-office building, New York, N. Y.

SIR: I have your note of the 27th instant, and regret to say that

block carrier by the recoil or counter-recoil of the gun, for which purpose the said pulley would be connected by a wire rope or its equivalent with some suitable portion of the gun-carriage.

What I claim as my invention, and desire to secure by letters patent, is—

1. The combination, with a breech-loading cannon and a breech-block for the same, which is withdrawn in a rearward direction, of a breech-block carrier hinged to the breech, and a breech-block retractor hinged to the breech separate from said carrier to move independently of said carrier to draw the breech-block thereinto and push it therefrom, but capable of moving with said carrier while the breech-block is therein, substantially as herein set forth.

370 2. The combination, with a breech-loading cannon and a breech-block for the same, which is withdrawn in a rearward direction, of a breech-block carrier by which the breech-block after withdrawal is moved aside out of the way of the breech, a breech-block retractor for withdrawing the breech-block from the breech into the said carrier, and a spindle supported in bearings attached to the breech and constituting a pivot upon which the said breech-block carrier and breech-block retractor are capable of separate movements, substantially as herein set forth.

3. The combination, with a breech-loading cannon and a breech-block for the same, which is locked and unlocked by turning it in the breech and is withdrawn in a rearward direction, of a breech-block carrier hinged to the breech, a breech-block retractor, also hinged to the breech, but capable of moving independently of said carrier, a locking-device for locking the breech-block, the said carrier, and the said retractor together, a pivotal spindle common to the hinges of the said carrier and retractor, a crank-arm on said spindle geared with the breech-block for turning it, and a driving projection on said spindle for actuating the said retractor, and through it the carrier, the said projection being arranged with a lost motion between it and the retractor, substantially as and for the purpose herein set forth.

4. The combination, with a breech-loading cannon, a breech-block for the same, which is locked and unlocked by turning it in the breech, a swinging breech-block carrier hinged to the breech, and a spindle which forms the pivot of the hinge of the said carrier, of a toothed rack geared with the said breech-block, and a crank-arm on said spindle connected with said rack to produce the turning of the breech for locking and unlocking it, substantially as herein described.

5. The combination, with a breech-loading gun and a mutilated-screw breech-block for the same, of a breech-block retractor consisting of, first, an arm; second, a hinge by which said arm is connected with the breech of the gun; third, a ring screwed into the breech-block, and, fourth, a sliding connection between the said arm and ring, a pivot-spindle for said hinge engaging with said arm with a lost motion, a pinion on said pivot, a toothed rack geared with said pinion, and a lever for carrying said rack, said lever having its

fulcrum on the breech of the gun, substantially as and for the purpose herein described.

6. The combination, with a breech-loading cannon, a breech-block for the same, which is locked and unlocked by turning it in the breech and is withdrawn in a rearward direction, and the breech-block retractor having a swinging arm which is hinged to the breech and in which the breech-block is capable of turning, of a spindle constituting the pivot of the hinge of the said retractor, and having a rigid projection for acting upon the swinging arm of the retractor with a lost motion to withdraw the breech-block, and a trip-pin attached to said arm to engage with said projection for the return movement of the retractor, but to be tripped during the withdrawing movement, substantially as herein set forth.

SAMUEL SEABURY.

Witnesses:
FRED'K HAYNES.
D. HOWARD HAYWOOD.

371 COMPLAINANTS' EXHIBIT LETTER No. 1. S. A. B., Commissioner.

Subject: Breech mechanism, 6" B. L. R.

BUREAU OF ORDNANCE, NAVY DEPARTMENT,
WASHINGTON CITY, *Sept. 29th*, 1890.

In reply refer to No. 256.6.

Lieut. Sam'l Seabury, room 37, post-office building, New York city.

SIR: The bureau has received the plans and description of your breech mechanism for a 6" B. L. R., and has carefully examined them.

While recognizing the merits of your design, the bureau has other designs, developed by its assistants, which it considers superior in some respects, and it has, therefore, concluded not to adopt your design, but to hold it as an alternative plan and a possible future trial and use.

I am, sir, your obed't serv't,

WM. M. FOLGER,
Chief of Bureau.

B.

372 COMPLAINANTS' EXHIBIT LETTER No. 2. S. A. B., Commissioner.

Subject: Blue prints.

BUREAU OF ORDNANCE, NAVY DEPARTMENT,
WASHINGTON CITY, *Nov. 28th*, 1891.

In reply refer to No. —.

Lieutenant Samuel Seabury, room 160, post-office building, New York, N. Y.

SIR: I have your note of the 27th instant, and regret to say that

it is not the practice of this bureau to furnish blue prints of any of its gun mechanism.

I am, sir, your obed't serv't,

WM. M. FOLGER,
Chief of Bureau.

D. H. S.

373 COMPLAINANTS' EXHIBIT LETTER No. 3. S. A. B., Commissioner.

NAVAL ORDNANCE PROVING GROUND,
GLYMONT, CHARLES CO., MD., *Dec.* 16, 1890.

DEAR MR. SEABURY: Your letter of the 11th has been forwarded here, and has just been received. As yet I do not wish to make public, more than I can help, the R. F. mechanism, for I have no patent on it. As soon as the chief saw the working model he had drawings made, and they will be published in the report; but before that time I hope to get the patent. I have been too busy for the bureau to have got my papers ready sooner, and I run considerable risk even now. Fortunately for me, I cannot myself fully understand the drawings for the report made by a bureau draughtsman, so they are pretty safe. I regret I cannot furnish you with a sketch, but I am situated as you see, and also have orders against letting others see the plans. As soon as possible I shall send you a drawing, for you could not understand that in the report.

Thanks for your congratulations, though I see no cause for them. The only success I have made so far is to prove that I can give 12 to 16 hours a day to the Government, live in a shanty and cook my own grub, and yet live to tell the tale.

Very truly yours, R. B. DASHIELL.

(7146.)

(Here follow article & diagrams marked Complainants' Exhibit "Scientific American," marked p. 373*a*.)

374 COMPLAINANTS' EXHIBIT W. M. F. No. 1.

Subject: Breech mechanism for 4" B. L. R.

BUREAU OF ORDNANCE, NAVY DEPARTMENT,
WASHINGTON CITY, *June 5th*, 1890.

In reply refer to No. 2084.

Lieutenant Samuel Seabury, room 37, P. O. building, New York city.

SIR: The bureau begs to acknowledge with thanks the receipt of your favor of the 3d inst., enclosing blue prints of your breech mechanism.

These I will hold for consideration after the trial of the Driggs-

Schroeder 4-inch block, now being manufactured at the Washington navy yard.

I am, sir, your obed't serv't,

W. M. FOLGER,
Chief of Bureau.

E. S. B.

375 COMPLAINANTS' EXHIBIT A 1.

Letter Written by Ward Hunt, Secretary of the Navy, to Master Samuel Seabury, Dated December 3, 1881.

"The department, however, desires to add its commendation of the spirit which prompted you to produce the designs, of the resolution which enabled you to complete them under such disadvantageous circumstances, and of the ability (both original and acquired) which they display. An ambition on the part of any officer to perfect himself in the correlative branches of his profession, while taking care to perform with credit his more legitimate duties, and to give to these extraneous matters only the time which he might otherwise have devoted to his own amusement, is worthy of every encouragement; and, when the result shows an amount of ability calculated to be of benefit to the service, the combination is sufficiently rare to deserve some special mention. The department will always be glad to foster and develop such tendencies in the officers who possess them."

(Here follow three diagrams marked pp. 375*a*, 375*b*, and 375*c*.)

376 & 377 DEFENDANT'S EXHIBIT No. 1, OF JUNE 10, 1893.

NEW YORK, *March 10th*, 1892.

Hon. Benjamin F. Tracy, Secretary of the Navy, Washington, D. C.

DEAR SIR: We have the honor to lay before you the evidence—in the papers accompanying this letter—of the infringement, by the Bureau of Ordnance of the Navy Department of certain original and important inventions of Lieutenant Samuel Seabury, U. S. N., secured by letters patent of the United States, and relating particularly to the breech mechanism of breech-loading cannon.

The invention of Lieutenant Seabury was a solution of the problem of devising a mechanism which by a single motion would effect the three distinct functions of unlocking the screw breech block, retracting it in the exact line of the axis of the bore, and swinging it entirely clear, for the opening of the breech, and reversing these operations for the closing of the breech.

Lieutenant Seabury filed his application in the United States Patent Office July 9th, 1889, and letters patent No. 425,584 were issued thereon April 15th, 1890. A further application upon certain improvements was filed March 31st, 1890, and letters patent No. 431,214 were issued thereon July 1, 1890.

In May, 1890, Lieutenant Seabury visited Washington, accompanied by ex-Captain J. Wall Wilson, who, with others, had acquired an interest in the invention. They took with them a working model of the mechanism of a calibre of about 2.25 inches, and drawings for the mechanism for a 4-inch gun. These were exhibited to Commodore Folger, chief of Bureau of Ordnance. The interview which then occurred is narrated in detail in the annexed statements of these gentlemen. No other device was then mentioned as coming in competition with Seabury's, except that of the Driggs-
378 Schroeder, a radically different contrivance, and one not applicable to a screw breech block. Before the interview ended Commodore Folger said he would try the 4-inch gun, and he requested blue-print drawings of the Seabury mechanism for that calibre; he also requested a drawing for a 6-inch gun, showing the mechanism, and also a gas check which had been devised by Lieutenant Seabury, and said that there was no reason that he should not try that at once.

Shortly thereafter, Lieutenant Seabury completed and forwarded to Commodore Folger blue-print drawings for the 4-inch gun, the receipt of which was acknowledged by that officer on June 5, 1890.

The blue-print drawings for the 6-inch gun were completed and forwarded to Commodore Folger on July 5, 1890. These elicited no response for ten days. Then Lieutenant Seabury wrote to the chief clerk of the bureau and was told in reply that the plans had been received and were under consideration. After two months' further waiting Lieutenant Seabury wrote to Commodore Folger upon the subject and received from him a letter dated September 29, 1890, saying, "the bureau has received the plans and description of your breech mechanism for a 6-inch B. L. R., and has carefully examined them. While recognizing the merits of your design, the bureau has other designs, developed by its assistants, which it considers superior in some respects, and it has therefore concluded not to adopt your design, but to hold it as an alternative plan, and a possible future trial and use."

The report of the Bureau of Ordnance for 1890 was published in October of that year. In this report Commodore Folger stated that several methods of handling the screw-block in one motion had been presented, and of these the bureau had decided to adopt that invented by Ensign R. B. Dashiell, which would be found figured in the appendix, and that the device presented by Lieutenant Seabury, of the navy, also offered features of advantage. The appendix thus referred to was not issued with the report, and when
379 it did appear, it contained no figure or description of the Dashiell invention.

In December, 1890, Lieutenant Seabury wrote to Ensign Dashiell for a copy of the drawings of his invention, and received an answer, dated December 16, 1890, stating that Dashiell could not yet make his device public, as he had not secured his patent, and had, in fact, been ordered to show it to no one.

In April, 1891, Captain Wilson saw a mechanism at the gun shop in the Washington navy yard in process of construction, the appear-

ance of which convinced him at once that it was an infringement of Seabury's invention. He was informed that work had been stopped upon it about six weeks before, by order of the Bureau of Ordnance.

During the summer of 1891 it was stated in the newspapers that the Dashiell mechanism had been successfully tried at the proving ground.

In November, 1891, Lieutenant Seabury, still being without any definite or authentic description of the Dashiell invention, wrote to Commodore Folger, saying that he would like to see the successful competitor of his own invention, and asking for blue-print drawings of it. The reply was a regret "that it is not the custom of this bureau to send out blue prints of any of its gun mechanism."

Finally, in February, 1892, Lieutenant Seabury and Captain Wilson visited the navy yard in Washington, and there saw the Dashiell mechanism, which had been or was being fitted to about twenty guns. An examination convinced them at once that this mechanism was an infringement of the Seabury invention. Upon the same day letters patent of the United States, No. 468,331, were issued to Ensign Dashiell.

The Seabury and Dashiell patents have been submitted to Mr. Edward C. Seward, a well-known patent expert, and his opinion to the effect that the Dashiell structure is a direct infringement of the Seabury patent, is submitted herewith.

380 The opinion of Messrs. Wetmore and Jenner, of this city, lawyers of wide experience in patent questions, and of high reputation, is also submitted herewith. It is clear and emphatic upon the question of infringement.

This claim of infringement does not necessarily imply the invalidity of the patent issued to Dashiell; that patent allows special form of particular parts; but has no greater effect than it would have if it purported, in so many words, to be an improvement upon or a modification of the invention secured by the Seabury patent. That is to say, Dashiell cannot use his inventions or make a gun embodying them without using the invention patented to Seabury. And therefore the manufacture of such guns without the consent of Seabury is an infringement.

That this infringement is deliberate and intentional, the direct result of an attempt to copy and appropriate the Seabury invention and to evade the law, seems to be a conclusion fully warranted by the facts.

When the Seabury invention was first shown to Commodore Folger, the latter expressed himself favorably towards it, and gave as the only reason for not trying it forthwith, the fact that the bureau had already acquired the Driggs-Schroeder, which was about to be tried upon a 4-inch gun. He said nothing then about any other designs possessed by the bureau, or in process of development by himself or any of his assistants—and not only was there no such suggestion in the conversation, but the terms of the conversation were such as to be inconsistent with the existence of any such idea at that time. Thus he even went so far as to discuss the price which the bureau should pay for the use of the invention and to fix upon

the amount—two hundred and fifty dollars for each 4-inch gun—he went so far as to say finally that he would try Seabury's invention, anyway, without regard to the Driggs-Schroeder, and to ask for blue-print drawings of the mechanism for a 4-inch and a 6-inch gun.

Then the letter of June 5th, 1890, acknowledging the receipt of Seabury's blue-print drawings for the 4-inch gun, while
381 it ignores the promise to try the Seabury invention, anyway, without regard to the Driggs-Schroeder, still makes no mention of any designs possessed by the bureau, or in process of development there, but only that the Seabury designs would be held "for consideration after the trial of the Driggs-Schroeder 4-inch block, now being manufactured at the Washington navy yard."

Neither was any intimation given to Lieutenant Seabury that it would be a waste of labor for him to go on and prepare the drawings for the 6-inch gun, but he was permitted to do so. And when he forwarded them on July 5th, 1890, nothing was said to indicate to him that *there* were not to be used for the purpose for which they had been asked and made.

The first intimation to that effect, and the first mention of any other design that was contained in Commodore Folger's letter of September 29, 1890, was in these words: "While recognizing the merits of your design, the bureau has other designs, developed by its assistants, which it considers superior in some respects, and it has therefore concluded not to adopt your design, but to hold it as an alternative plan, and a possible future trial and use."

Dashiell's application for a patent was filed in November, 1890, and was not granted until February, 1892. During the most of this time the bureau seems to have taken pains to keep secret the particulars of the Dashiell invention, and refused with scant courtesy of manner Seabury's request for a copy of the drawings of the successful competitor with his own invention. Of course, when the mechanism was applied to a considerable number of guns and the patent was on the eve of being issued to Dashiell, concealment was no longer possible.

Thus the Bureau of Ordnance had Lieutenant Seabury's detail working drawings in its possession for five months before Dashiell's application for a patent, and Dashiell, as an assistant in the bureau, had abundant opportunity of access to them. Under such
382 circumstances a close resemblance of structure and mode of operation is especially significant and concealment is more than suggestive.

On the same visit to Washington and within a single day of the time when Lieutenant Seabury and Captain Wilson called upon Commodore Folger, they called upon General Benet, chief of ordnance of the army, and exhibited to him the same drawings and model. He commended them to the board of ordnance and fortifications, at whose request Lieutenant Seabury prepared and furnished the blue-print drawings for the breech mechanism for a 5-inch siege gun, and the mechanism has been built and adapted to such gun at the expense and under the supervision of the War De-

partment, and thorough tests have been given with very satisfactory results a- the Government proving ground at Sandy Hook.

It may not be inappropriate to call attention to a communication addressed to Lieutenant Seabury (then master) on December 3, 1881, by the Navy Department, in acknowledging certain designs which he had sent to the department. In this Secretary Hunt says: "The department, however, desires to add its commendation of the spirit which prompted you to produce the designs, of the resolutions which enabled you to complete them under such disadvantageous circumstances, and of the ability (both original and acquired) which they display. An ambition on the part of any officer, to perfect himself in the correlative branches of his profession, while taking care to perform with credit his more legitimate duties and to give to those extraneous matters only the time which he might otherwise have devoted to his own amusement, is worthy of every encouragement, and when the result shows an amount of ability calculated to be of benefit to the service, the combination is sufficiently rare to deserve some special mention. The department will always be glad to foster and develop such tendencies in the officers who possess them."

383 This commendation has been a strong incentive to Lieutenant Seabury, and has encouraged him in the course of study and invention in which he has persevered down to the present time.

This matter is presented in the first instance to you, not from any doubt of our ability to secure ample protection from the courts, but because feeling assured that such practices were without your knowledge or sanction and would meet with your severe condemnation, we believe that we owe to you, as a matter of fairness and courtesy, to afford an opportunity to set the matter right without recourse to the courts.

On March 8th, two days ago, Lieutenant Seabury, whose present tour of duty will not expire until April 1st, addressed to Commodore Ramsay a request for a furlough, so that he might have an opportunity to perfect some improvements upon these inventions and to properly superintend their development at this critical stage. This morning he has received an order, dated March 9th, in the following words: "You will hold yourself in readiness for orders to the Ranger." Permit us to suggest the inquiry whether such a detail at this precise juncture, a detail which is likely to take Lieutenant Seabury to the antipodes, will not be liable to misconstruction in the event of an investigation of these matters, which would naturally require his presence here.

We remain, with great respect, very truly yours,

WILSON & WALLIS.

384 DEFENDANT'S EXHIBIT No. 2, OF JUNE 10, 1893.

NEW YORK, *March* 9, 1892.

Messrs. Wilson & Wallace, No. 48 Wall street.

GENTLEMEN: In response to your request for my statement concerning the invention and patenting of my breech mechanism for

guns, and subsequent relations with the Bureau of Ordnance, Navy Department, concerning it, I have to say that the original mechanism was invented and put in practical shape during the spring and early summer of 1889. Captain J. Wall Wilson, of New York city, and others became interested in the matter, and patents were applied for in the United States in the summer of 1889. The United States patent was allowed in October of the same year, and was issued on April 15, 1890, No. 425,584, applications for foreign patents being filed abroad on the same date. A working model was begun in November, 1889, but not finished until March, 1890. A second patent for the same invention, embodying improvements in handling the rack for unlocking the block, as well as a simple and novel means of locking the crank arm and retractor for the return movement, also a new cartridge-case extractor, was issued July 1, 1890, numbered 431,214.

In May (about the 11th), 1890, I accompanied Captain Wilson to Washington to lay the matter before Commodore Folger, chief of Bureau of Ordnance, our hope being to get the mechanism tried on a four-inch gun, drawings for which I had with me—as well as the model. Commodore Folger evinced much interest in the matter, and examined the model critically and at length, promising by saying that the bureau was then in possession of a good mechanism (the Driggs-Schroeder), or, as he expressed it later, "our fences are all up, and in good condition," so that mine could only be considered as an alternative then. "But," he added, "I'll try
385 this if the other don't succeed." During his examination of the model, Commodore Folger said, as if to himself, "Yes, in many respects this is better than the one we have," and upon completing his inspection, he started to his feet, exclaiming: "Well, what will you charge us for this?" This question took both Captain Wilson and myself rather aback, as we had only hoped for a trial and had not considered the amount. Captain Wilson said: "Do you mean a lump sum?" Commodore Folger replied: "No, the Government don't buy in that way; I mean what royalty will you ask?" Then he said to Captain Wilson, "Talk it over with Seabury and let me know what conclusion you arrive at." Captain Wilson and I agreed to base our royalty—for the four-inch gun—on the amount charged by the Driggs Ordnance Company, and so informed Commodore Folger. The latter said he thought this amount was $250 per gun, and sent for information, which was brought by Ensign (now Professor) Alger in a letter book, stating the price and confirming Commodore Folger's impression. This $250 was the price agreed upon for each four-inch gun in case my mechanism should be utilized.

Conversation then turned upon a device I had to exhibit—this being a new gas check I intended to be attached to the ordinary serge cartridge case, so as to give the latter the advantage of a rapid-fire mechanism, including automatic firing apparatus, and to avoid the use of the De Bange gas check, which absorbs so much space in the bore of a gun. The chief of bureau expressed himself as much interested in this matter, saying he would like to see it tried, but

was rather inclined to dispute the originality of the invention, saying that he considered himself its originator. I merely mention this to lead up to the conversation following. Some further conversation followed, during which Captain Wilson and I endeavored to get Commodore Folger to reconsider his assertion that he would only hold my breech mechanism as an alternate, instead of giving it a trial regardless of the Driggs-Schroeder mechanism, which was then being built for a 4-inch gun.

386 At length Commodore Folger said, "I'll tell you what I will do, I will try this gun anyway; send me blue prints of these," pointing to my tracings of the 4-inch mechanism, "but there is no reason why we shouldn't try this at once" (turning to my drawing of the gas check); make me plans of this in a 6-inch gun, with your mechanism and firing pin and send them in."

We then took our leave. You may judge of our surprise and chagrin, when, after returning to New York, I finished the 4-inch drawings and sent blue prints of the same to Commodore Folger, I received from him acknowledgment stating that these would be held as alternates, and making no reference to the trial we had so much reason to expect.

Captain Wilson wrote to Commodore Folger, stating his feeling on the matter, and recounting our conversation with him, but the reply was that he (Commodore Folger) could not imagine how he received the impression that he would try the gun. I then wrote out in full my recollection of the conversation and sent it to Commodore Folger, hoping that I might recall the matter to his mind, but no reply was made.

Disappointed about the 4-inch gun, I still had his word for it that he would try the gas check, so devoted as much of the month of June, 1890, as I could secure to the preparation of plans for the 6-inch gun, often working until midnight, in order that I might be ready the earlier. The full-size plans were made, traced and blue-printed by July 5, 1890, and on that date I forwarded the prints, together with a written description, to Commodore Folger, Bureau of Ordnance, Navy Department. After ten days, receiving no reply or acknowledgement, I took the precaution to write a note to the chief clerk of the bureau, asking if the plans had been received. The reply was that they had been received and were under consideration. I waited patiently until the latter part of September following, when I wrote to Commodore Folger, saying that

387 I had sent him the drawings for the 6-inch gun on July 5, and asking him about his decision respecting the plans.

His reply stated that the plans had been received, but that "the bureau has other designs developed by its assistants which it considers superior, in some respects, and it has therefore concluded not to adopt your design, but to hold it as an alternate plan for a possible future trial and use."

This was a heavy blow to us, but there was no way to ascertain what mechanism the chief of bureau referred to, and it was not until the publication of the report of the Bureau of Ordnance for 1890 (in October of that year) that we found the new invention to be by

Ensign R. B. Dashiell, attached to the Bureau of Ordnance. In his report, Commodore Folger referred to the matter about as follows: "Several methods of handling the screw-block in one motion have been presented during the year. Of these the bureau has concluded to adopt that invented by Ensign R. B. Dashiell. It will be tried on a 5-inch gun and if found successful will be applied to a 6-inch gun. Another device presented by Lieutenant Samuel Seabury, U. S. N., also offers features of advantage." Following the statement concerning the Dashiell mechanism was a remark that "this will be found figured in the appendix." This meant the appendix of the report as it would appear, embodied, in common with the reports of all other bureaus, in the Secretary of the Navy's report for the year 1890. As this report is not generally issued in its complete form until March or later, there was nothing to do but to wait its publication in order to see what had taken place of my mechanism, which, however, had in the meantime been ordered by the board of ordnance and fortifications (of the army) to be applied to a 5-inch siege rifle. In the early part of December, 1890, I determined to write Mr. Dashiell for a copy of his drawings (presuming that as the bureau had announced its intention of trying it, it must be ready for publication). In his reply dated December 16th, 1890,
388 Mr. Dashiell stated that he could not yet make the device public, as he had not secured his patent, and he had, in fact, been ordered to show it to no one. Here was another delay not improved by the Secretary's report—when it finally appeared—April, 1891, I think—for in it there was nothing in the way of the promised "figured in the appendix." I had not expected to see it, having already inferred that owing to the secrecy surrounding this new mechanism nothing would be seen of it until in the gun form.

The next notice of the Dashiell mechanism was in the daily papers in the past summer or early autumn, stating its successful trial at the proving grounds.

In November last, I wrote to Commodore Folger asking for blue prints of the Dashiell mechanism, simply stating that I would be glad to see the successful competitor of my own invention. The reply conformed to my preconceived idea of its nature—Commodore Folger "regrets to state that it is not the custom of this bureau to send out blue prints of any of its gun mechanism."

During a visit to Washington in April, 1891, Capt. Wilson had visited the Washington navy yard, and had seen a gun (either a 4-inch or a 5-inch gun—presumably the former), fitted for the Dashiell mechanism, and had also seen the parts of the mechanism. On returning to his hotel he had made rough sketches of several parts, and on his return to New York showed them to me, announcing his firm conviction that they were infringements on my invention. The most notable of these was the rack for revolving the block and the retractor arm for entering and withdrawing the same. I was thus in a measure prepared for the inspection of the drawings of the Dashiell mechanism, so called, at the New York navy yard during the present winter. This convinced

me that an infringement had been made upon my own invention—especially in the two important parts above mentioned. In the early part of the past month I accompanied Captain Wilson to Washington for the purpose of ascertaining definitely something in relation to this matter. We visited the navy yard and found that some twenty guns, more or less, had been, or
389 were being fitted with this mechanism, and it only required the practical manipulation of the device to confirm me in the belief that it infringed my invention as claimed in both patents. We heard incidentally that Mr. Dashiell had obtained a patent, and to prove this had a search made in the Patent Office. This was on February 9th, 1892. Nothing could be done, and we returned to New York, intending to lay the matter before the Secretary of the Navy. Since our return, as you know, the whole affair has been complicated by the issuance of a patent to Mr. Dashiell (on the very day of our search). From an inspection of this patent I see no reason to change my belief that the infringement exists. My claims were for original methods—the first ever patented in the United States. Mr. Dashiell uses, as his main features, the same general parts, having a difference only in certain unimportant features.

My claims were allowed as the first in the country for the retractor or arm by which the block is withdrawn from or pushed into the gun, and for the rack against the breech of the gun for turning the block. If he chooses to slightly alter the forms of these pieces without changing their functions, I cannot see that he is thereby entitled to use them without permission of the holders of a prior general patent upon them.

On the day previous to that upon which Captain Wilson and I had the interview with Commodore Folger which I have referred to, we had called upon General Benet, chief of ordnance (finding Commodore Folger absent for the day), and had exhibited to him the same drawings and model. General Benet expressed much interest, but said his office had no funds for trying such things, and that they should be referred to the board of ordnance and fortifications, to which he commended us. The detailed blue prints for the mechanism for the four-inch gun, and later the drawings for the six-inch gun prepared for the naval bureau of ordnance, including the gas check, were accordingly submitted to that board, and
390 on July 11, 1890, were recommended by the board to be applied either to a five-inch siege rifle or to a seven-inch B. L. howitzer. Owing to the ability to obtain earlier use of the five-inch gun it was selected, and the mechanism so authorized was constructed and applied to the gun at the West Point foundry at the expense of the War Department.

The gas checks were also made in sufficient numbers and the completed gun has been undergoing a series of tests at the Sandy Hook proving ground, and has been officially reported as satisfactory. The mechanism has been further developed and the board of ordnance and fortifications has now under consideration its adaptation to guns of the highest calibre, waiting now, as I am just

informed, an expression of the views of the ordnance office of the War Department on the subject.

Yours truly, SAMUEL SEABURY,
Lieut. U. S. Navy.

STATE OF NEW YORK, }
City and County of New York, } *ss:*

Samuel Seabury, being duly sworn, says that the statements contained in the foregoing communication, made and signed by him, are true to the best of his knowledge, information and belief.

SAMUEL SEABURY.

Sworn to before me this 10th day of March, 1892.

WM. E. ZABRISKIE,
Notary Public, N. Y. Co.

391 1.

R. B. D. No. 1. Wm. Herbert Smith, U. S. Commissioner. F'd May 30, '94.

U. S. Circuit Court, District of Maryland. In Equity.

GROSVENOR *et al.* }
vs. }
DASHIELL. }

(2–175*a*.)

DEPARTMENT OF THE INTERIOR,

(Vignette.)

UNITED STATES PATENT OFFICE.

To all persons to whom these presents shall come, Greeting:

This is to certify that the annexed is a true copy from the bound volumes of the library of this office of the specification of the English letters patent of Joseph Farcot, ≠ 3402—date of application, March 5, 1887; specification accepted, April 5, 1887—for "apparatus for working the breech blocks of breech-loading guns."

In testimony whereof I, W. E. Simonds, Commissioner of Patents, have caused the seal of the Patent Office to be affixed this 23d day of February, in the year of our Lord one thousand eight hundred and ninety-three, and of the Independence of the United States the one hundred and seventeenth.

Seal Patent Office, United States of America.

W. E. SIMONDS,
Commissioner.

A.D. 1887. March 5. No. 3402.
FARCOT'S Complete Specification.

(2 Sheets)
Sheet 1

No. 569.
Dashwell
v.
Grosvenor
p. 392 a

19

Fig. 1.

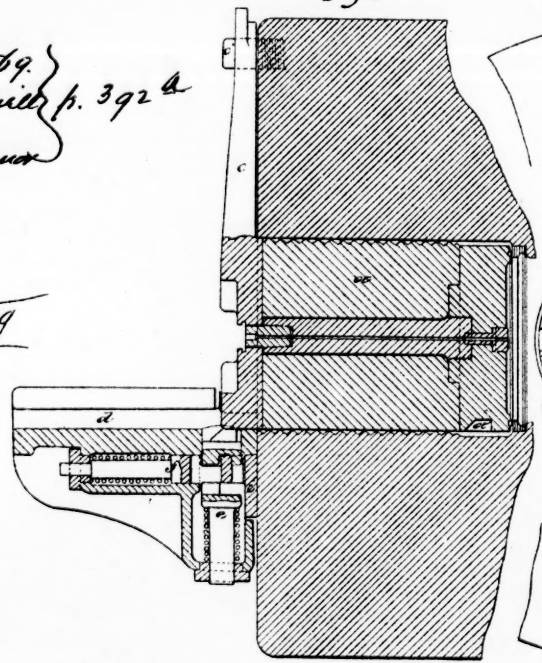

Fig. 2.

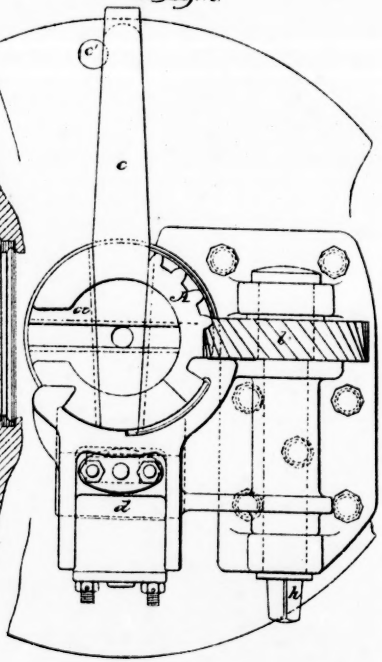

A.D. 1887. March 5. No. 3402.
FARCOT'S Complete Specification.

(2 Sheets)
Sheet 2.

20

Fig 3

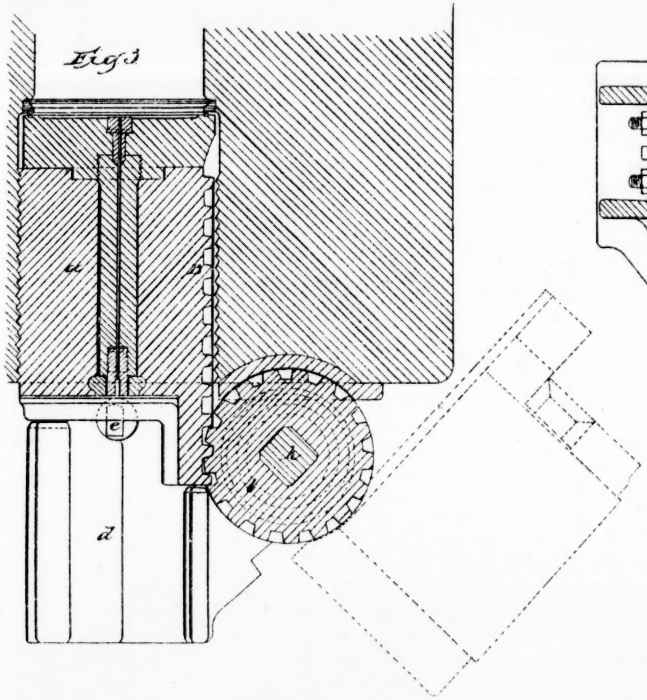

Fig 4

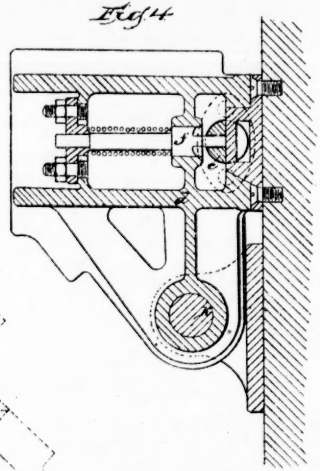

No. 569.
Dartnell
v.
Grosvenor.
p. 392 b

392 Date of application, 5th Mar., 1887; specification accepted, 5th Apr., 1887.

A. D. 1887, 5th March. No. 3402.

Complete Specification.

Apparatus for working the breech blocks of breech-loading guns.

I, Joseph Farcot, of Saint-Ouen (Seine) in the Republic of France, engineer, do hereby declare the nature of this invention and in what manner the same is to be performed to be particularly described and ascertained in and by the following statement:

This invention relates to apparatus so arranged that by the rotation of a single axis the successive movements necessary for introducing or withdrawing the breech block of a breech-loading gun are performed with ease, rapidity and exactness, as will be described with reference to the accompanying drawings.

(Here follow diagrams marked pp. 392*a* & 392*b*.)

Fig. 1 is a part longitudinal section and Fig. 2 a part end view of the breech of a gun. Fig. 3 is a part sectional plan, and Fig. 4 is a part sectional plan at a lower level. The breech plug *a*, which is made as usual with an interrupted screw-thread so that it can be moved longitudinally and turned through a fraction of a turn, such as one-sixth, to screw or to unscrew it, has a toothed rack B formed along one side, and has part of its outer rim at A toothed, the teeth in both cases being suited to those of a worm pinion *l* which is mounted on a vertical axis that can be turned by a handle applied to its squared end *k*. On this axis is pivotted a shelf *d* which is grooved to receive the lower side of the breech plug *a*. In the shelf *d* are fitted two spring bolts *e* and *f*, the vertical bolt *e* having its head formed as a sloped latch and notched underneath to embrace a catch *i* that is fixed to the breech of the gun. The front end of the horizontal bolt *f* is made so as to advance under the head of *e* when *e* rises. A sloping notch *a'* is formed in the lower
393 side of the breech plug *a*. A lever arm *c* projects from the breech plug *a* and is stopped by a stud *c'*. The action is as follows. The breech plug being in position in the breech, and it being desired to withdraw it, the axis *k* is turned in one direction. At this time the bolt *e* is embracing the catch *i* and, consequently, the shelf *d* is held stationary; also the worm wheel *l* is in gear with the toothed segment A, consequently the effect of turning *l* during the first part of its revolution, is to turn the breech plug *a* partly round, unscrewing it. The wheel *l* now coming in gear with the rack B, the continued turning of *l* is to move the plug longitudinally out of the breech and onto the shelf *d* along the groove of which it is guided until it comes against stops at the end. At this time the notch *a'* presents itself to the head of the bolt *e*, allowing the bolt to rise and disengage itself from *i*. The axis *k* being still

turned, the shelf *d* carrying the breech plug turns to the position shown by the dotted lines in Fig. 3, leaving the breech clear. As *d* begins to move towards the dotted position the end of the bolt *f* advances under the head of *e* and keeps *e* up, holding the breech plug in position during the movement of *d*. The introduction of the plug into the breech is effected by turning *k* backwards, all the movements taking place in inverse order, that is to say, first, the shelf *d* sweeps round bringing the breech plug in line with the breech, and thrusting back the bolt *f* so that *e* is free to descend; secondly, the wheel *l* acting in the rack B causes the breech plug to advance longitudinally, the first part of its movement depressing the bolt *e* and so causing it to engage *i*, and finally the wheel *l* acting on the toothed segment A causes the breech plug to turn partly round engaging its interrupted screw-threads with those of the breech.

Having now particularly described and ascertained the nature of my said invention and in what matter the same is to be performed, I declare that what I claim is:—

1. The construction and use of apparatus for working the breech blocks of breech-loading guns, substantially as herein described with reference to the accompanying drawings.

2. In combination with a worm wheel *l* and grooved shelf *d* pivotted on its axis, a breech plug *a* with toothed segment A and toothed rack B arranged and operating substantially as described.

394 3. In combination with the shelf *d*, the spring bolts *e* and *f* and the catch *i* arranged and operating as described.

Dated this 5th day of March 1887.

ABEL & IMRAY,
Agents for the Applicant.

(Endorsed:) 3301. D, 93.

395 (5.)

R. B. D. No. 2. Wm. Herbert Smith, U. S. Commissioner. F'd May 30, '94.

U. S. Circuit Court, District of Maryland. In Equity.

GROSVENOR *et al.*
vs.
DASHIELL.

(2–175*a*.)

DEPARTMENT OF THE INTERIOR,

(Vignette.)

UNITED STATES PATENT OFFICE.

To all persons to whom these presents shall come, Greeting:

This is to certify that the annexed is a true copy from the bound volumes of the library of this office of the provisional and complete

specifications in the matter of the English letters patent of Jean Baptiste Gustave Adolphe Canet, # 7434—date claimed for patent under sect. 103 of act, being date of first foreign application (in France), 28th March, 1888; date of application (in United Kingdom), 19 May, 1888; complete specification left, 24th December, 1888; complete specification accepted, 12th February, 1889 (under international convention)—for improvements in quick-firing guns.

In testimony whereof I, W. E. Simonds, Commissioner of Patents, have caused the seal of the Patent Office to be affixed this 23d day of February, in the year of our Lord one thousand eight hundred and ninety-three, and of the Independence of the United States the one hundred and seventeenth.

Seal Patent Office, United States of America.

W. E. SIMONDS,
Commissioner.

396 Date claimed for patent under sect. 103 of act, being date of first foreign application (in France), 28th Mar., 1888.

Date of application (in United Kingdom), 19th May, 1888; complete specification left, 24th Dec., 1888; complete specification accepted, 12th Feb., 1889.

A. D. 1888. No. 7434.

(Under international convention.)

Provisional Specification.

Improvements in quick-firing guns.

I, Jean Baptiste Gustave Adolphe Canet, of 91 Avenue Malakoff, Paris, France, civil engineer, do hereby declare the nature of this invention, to be as follows:

The present invention relates to improvements on the apparatus described in my prior patent No. 9453 dated 4th July, 1887, and consists in a new arrangement of the breech screw and the firing mechanism.

In order to enable the invention to be readily understood I will now proceed to describe same by the aid of the accompanying drawings, in which—

Figs. 1 and 2 are respectively an end and a side elevation of the breech screw.

Fig. 3 is a section through the axial vent, and

Fig. 4 shows in detail the heel at the end of the working lever.

I impart the rotary and longitudinal movements to the breech screw, by the simple rotary movement of the operating lever.

Instead of cutting the surface of the breech screw A into straight segments limited by the generating lines of the cylinder, I employ segments of helicoidal form—8 of which are shown in the drawing—four being full, while the other four are cut away. Two of

the cut-away segments have a central helicoidal groove B, with which engage rollers C, C′, let into the screw-carrier.

When a rotary movement is imparted to the breech screw
397 A, during the first eighth of such rotation the screw-threaded segments are disengaged from their counterpart, leaving the screw free.

During this time the rollers C, C′, travel along a portion of the helicoidal groove which is parallel to the inclination of the threads of the screw. During the continuation of the rotary movement the rollers C, C′, engage the part of the helicoidal groove B which has a great inclination, and as they are stationary, the breech screw receives a longitudinal movement in the direction of the axis, causing it to draw out of the gun.

The breech is closed by turning the hand lever in the reverse direction.

Another important improvement that I have made in the breech mechanism consists in the following arrangement:

The axis of the hand lever D carries a cam F, which when the breech is quite closed is opposite an opening G formed in the carrier.

When the hand lever is raised the cam F acts upon the end of the firing slide H and makes it travel downwards. This motion cocks the hammer, by means of the rack I, at the same time it acts on the tail of the extractor J.

In its descent the firing slide compresses the spiral spring K which will work the slide back when the lanyard is pulled. The latter is fixed at L to a hook or projection on the trigger.

In order to keep the hand lever steady during the movement of the breech screw and its disengagement to one side, I provide this lever with a heel piece M which bears against a small spring pawl or catch N inserted in the breech screw.

When the breech is closed this pawl or catch is held by the edge of the full segment of the carrier in the position N′, and the hand lever can turn freely.

If the breech screw is turned the pawl or catch arrives opposite a cut-away segment of the carrier, the spring acts and causes the nose of this pawl or catch to engage under the heel piece M of the hand lever, which can no longer be turned down; it is only at the moment of the closing of the screw, when the last eighth of a revolution is effected, which causes the screw to engage with its counterpart, that the inclined plane O, which joins the full segment with the cut-away segment of the carrier, lowers the pawl or catch, and renders the hand lever free.

398 It will be readily understood that the materials, proportions and dimensions, as well as the accessory arrangements may be varied without departing from my invention, which may be applied to any system of guns, without or with metallic cartridges; in the latter case an ordinary extractor being added to the screw.

Dated this 18th day of May, 1888.

JEAN BAPTISTE GUSTAVE ADOLPHE CANET.

No. 569.
Dashiell
v.
Grosvenor
p. 398a

2 Sheets — Sheet 1.

Fig. 1.

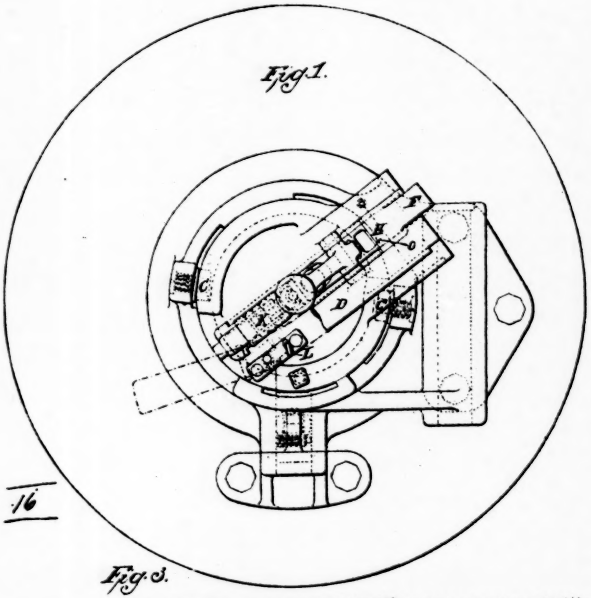

16

Fig. 3.

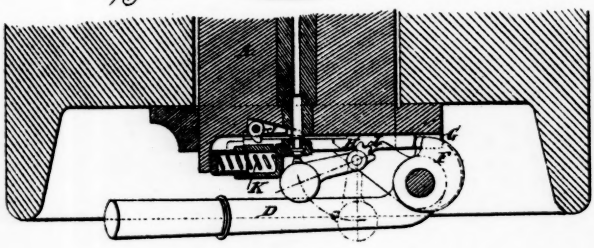

A.D. 1888. March 28 No. 7449.
CANEY'S Common Dissolution.

No. 569.
Dashiell
v.
Grosvenor.
} p. 398 b

2 Sheets — Sheet 2.

Fig. 2.

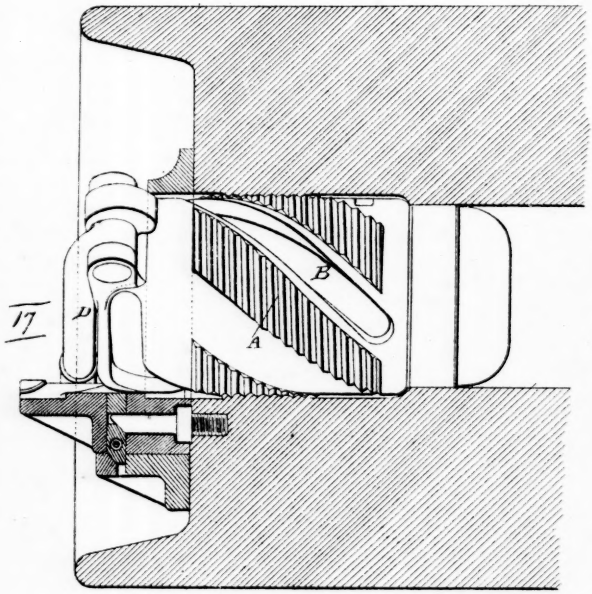

Fig. 4.

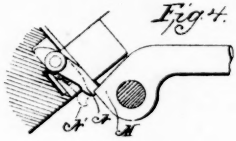

A.D. 1888. March 23. No. 7449.
Copyright Attorney General, Canada.
CANEPS CONTRACTS SPECIFICATION.

Date claimed for patent under sect. 103 of act, being date of first foreign application (in France), 28th Mar., 1888.

Date of application (in United Kingdom), 19th May, 1888; complete specification left, 24th Dec., 1888; complete specification accepted, 12th Feb., 1889.

A. D. 1888. No. 7434.

(Under international convention.)

Complete Specification.

Improvements in quick-firing guns.

I, Jean Baptiste Gustave Adolphe Canet, of 91 Avenue Malakoff, Paris, France, civil engineer, do hereby declare the nature of this invention, and in what manner the same is to be performed, to be particularly described and ascertained in and by the following statement:

The present invention relates to improvements on the apparatus described in patent No. 9453 dated 4th July 1887, and consists in a new arrangement of the breech screw and the firing mechanism.

In order to enable the invention to be readily understood I will now proceed to describe the same by the aid of the drawings filed with the provisional specification, in which

(Here follow diagrams marked pp. 398*a* & 398*b*.)

Figs. 1 and 2 are respectively an end and a side elevation of the breech screw.

Fig. 3 is a section through the axial vent, and

Fig. 4 shows in detail the heel at the end of the working lever.

I impart the rotary and longitudinal movements to the breech screw, by the simple rotary movement of the operating lever.

399 Instead of cutting the surface of the breech screw A into straight segments limited by the generating lines of the cylinder, I employ segments of helicoidal form—8 of which are shown in the drawing—four being full, while the other four are cut away. Two of the cut-away segments have a central helicoidal groove B, with which engage rollers C, C′, let into the screw-carrier.

When a rotary movement is imparted to the breech screw A during the first eighth of such rotation the screw-threaded segments are disengaged from their counterpart, leaving the screw free.

During this time the rollers C, C′, travel along a portion of the helicoidal groove which is parallel to the inclination of the threads of the screw. During the continuation of the rotary movement the rollers C, C′, engage the part of the helicoidal groove B which has a great inclination, and as they are stationary, the breech screw receives a longitudinal movement in the direction of the axis, causing it to draw out of the gun.

The breech is closed by turning the hand lever in the reverse direction.

Another important improvement that I have made in the breech mechanism consists in the following arrangement:

The axis of the hand lever D carries a cam F, which when the breech is quite closed is opposite an opening G formed in the carrier. When the hand lever is raised the cam F acts upon the end of the firing slide H and makes it travel downwards. This motion cocks the hammer, by means of the rack I, at the same time that it acts on the tail of the extractor J.

In its descent the firing slide compresses the spiral spring K which will work the slide back when the lanyard is pulled. The latter is fixed at L to a hook or projection on the trigger.

In order to keep the hand lever steady during the movement of the breech screw and its disengagement to one side, I provide this lever with a heel piece M which bears against the small spring pawl or catch N inserted in the breech screw.

When the breech is closed this pawl or catch is held by the edge of the full segment of the carrier in the position N', and the hand lever can turn freely.

400 If the breech screw is turned the pawl or catch arrives opposite a cut-away segment of the carrier, the spring acts and causes the nose of this pawl or catch to engage under the heel piece M of the hand lever, which can no longer be turned down; it is only at the moment of the closing of the screw, when the last eighth of a revolution is effected, which causes the screw to engage with its counterpart, that the inclined plane O, which joins the full segment with the cut-away segment of the carrier, lowers the pawl or catch, and renders the hand lever free.

It will be readily understood that the materials, proportions and dimensions, as well as the accessory arrangements may be varied without departing from my invention, which may be applied to any system of guns without or with metallic cartridges; in the latter case an ordinary extractor being added to the screw.

Having now particularly described and ascertained the nature of my said invention, and in what manner the same is to be performed, I declare that what I claim is:

1. The improved construction consisting in cutting on the face of the breech screw helicoidal screw-threaded segments, the segments without screw-threads having a groove with which fixed rollers engage, such construction enabling the disengagement and the backward movement of the breech screw to be effected by the simple rotary movement of the hand lever from left to right.

2. The construction of firing slide and the automatic cocking and extractor mechanism.

3. The construction of the hand lever permitting it to be held immovable while the breech is being opened and closed.

4. The accessory arrangements of the apparatus above described.

Dated this 21st day of December 1888.

J. B. G. A. CANET.

(Endorsed:) 3301. D. 93.

401 4.

R. B. D. No. 3. Wm. Herbert Smith, U. S. Commissioner. F'd May 30, '94.

U. S. Circuit Court, District of Maryland. In Equity.

GROSVENOR *et al.*
vs.
DASHIELL.

(2–175*a*.)

DEPARTMENT OF THE INTERIOR,

(Vignette.)

UNITED STATES PATENT OFFICE.

To all persons to whom these presents shall come, Greeting:

This is to certify that the annexed is a true copy from the bound volumes of the library of this office of the provisional and complete specifications in the matter of the English letters patent of John Fielding, ≠ 14602—date of application, October 11, 1888; complete specification left, July 9, 1889; accepted, August 10, 1889—for improvements in breech mechanism for ordnance.

In testimony whereof I, W. E. Simonds, Commissioner of Patents, have caused the seal of the Patent Office to be affixed this 23d day of February, in the year of our Lord one thousand eight hundred and ninety-three, and of the Independence of the United States the one hundred and seventeenth.

Seal Patent Office, United States of America.

W. E. SIMONDS,
Commissioner.

402 No. 14602. A. D. 1888.

Date of application, 11th Oct., 1888; complete specification left, 9th July, 1889; accepted, 10th Aug., 1889.

Provisional Specification.

Improvements in breech mechanism for ordnance.

I, John Fielding of the Atlas works in the city and county of Gloucester engineer, do hereby declare the nature of this invention to be as follows:

This invention refers to breech-loading ordnance in which the breech block is secured by means of an interrupted screw-thread formed on the exterior of the block and in the interior of breech of gun, on what is known as the French system, the block when withdrawn being carried in a tray or ring hinged to the gun for the purpose of swinging the block clear of the breech to allow of the loading of the gun.

In order to open the breech it is first necessary to turn the block far enough to disengage the threads and bring those on the block opposite the space in the breech thread, it is then drawn straight out until it can be swung out of the way in the hinged tray or ring.

According to this invention these three movements are performed by turning a winch handle continuously in the same direction from the commencement of the first until the completion of the last movement, and the reverse movement of the handle causes the block to be replaced and secured.

The construction by which this result is obtained is as follows, viz:

The winch handle is formed or keyed on a shaft working in a hole bored eccentrically in the breech block, parallel with the axis and opposite or in line with the centre of one of the threaded parts of the block.

On the shaft also are keyed or formed a short segment of a spur pinion, and a worm. The segment when the block is "home" gears with a short internal segment on the hinge box of tray or ring. The worm when the breech block is turned so as to bring its
403 threads opposite the spaces in breech, gears with a suitable worm rack cut in one of the said spaces.

The worm rack is continued from the rear of the breech for a distance around the hinge boss on rear of gun, the teeth on the latter forming a segment of a worm wheel.

The block is removed in the following manner viz:—

The first movement of the winch handle unscrews the block by means of the pinion segment gearing with internal segment, at the same time the worm is brought into gear with the rack and the continued rotation of the winch handle withdraws the block far enough to enable it to be swung clear away, which is done by the further rotation of the handle.

In lieu of a spur pinion and segment for unscrewing the block, a finger on the winch shaft may engage in a slot formed on the tray or ring.

By a slight modification, the block instead of being swung away from the breech in the manner described above may be traversed across the rear face of gun, either in a straight line or around a pivot fixed to the rear of the gun parallel with its axis, a spur pinion on the winch shaft gearing into a straight or segmental rack, the block resting in a tray or guide working in suitable slide or upon the pivot.

In lieu of the shaft being turned manually by the winch handle, it may be driven by a hydraulic, steam, air, electric, or other motor.

JOHN FIELDING.

No. 14602. A. D. 1888.

Date of application, 11th Oct., 1888: complete specification left, 9th July, 1889; accepted, 10th Aug., 1889.

Complete Specification.

Improvements in breech mechanism for ordnance.

I, John Fielding of the Atlas works in the city of Gloucester, engineer do hereby declare the nature of this invention and in what manner the same is to be performed, to be particularly described and ascertained in and by the following statement:—

This invention refers to breech-loading ordnance in which
404 the breech block is secured by means of an interrupted screw-thread formed on the exterior of the block and in the interior of breech of gun, on what is known as the French system, the block when withdrawn being carried in a tray or ring hinged to the gun for the purpose of swinging the block clear of the breech to allow of the loading of the gun.

In order to open the breech it is first necessary to turn the block far enough to disengage the threads and bring those on the block opposite the spaces in the breech thread, it is then drawn straight out until it can be swung out of the way in the hinged tray or ring.

According to this invention these three movements are performed by turning a winch handle continuously in the same direction from the commencement of the first until the completion of the last movement, and the reverse movement of the handle causes the block to be replaced and secured.

The construction by — this result is obtained is as follows, viz:—

The winch handle is formed or keyed on a shaft working in a hole bored eccentrically in the breech block, parallel with the axis and opposite or in line with the centre of one of the threaded parts of the block.

On the shaft also are keyed or formed a short segment of a spur pinion, and a worm. The segment when the block is "home" gears with a short internal segment on the hinge box of tray or ring. The worm when the breech block is turned so as to bring its threads opposite the spaces in breech, gears with a suitable worm rack cut in one of the said spaces.

The worm rack is continued from the rear of the breech for a distance around the hinge boss on rear of gun, the teeth on the latter forming a segment of a worm wheel.

The block is removed in the following manner, viz:—

The first movement of the winch handle unscrews the block by means of the pinion segment gearing with internal segment, at the same time the worm is brought into gear with the rack and the continued rotation of the winch handle, withdraws the block far enough to enable it to be swung clear away, which is done by the further rotation of the handle.

In lieu of a spur pinion and segment for unscrewing the block, a

finger on the winch shaft may engage in a slot formed on the tray or ring.

405 By a slight modification the block instead of being swung away from the breech in the manner described above, may be traversed across the rear face of gun, either in a straight line or around a pivot fixed to the rear of the gun, parallel with its axis, a spur pinion on the winch shaft gearing into a straight segmental rack, the block resting in a tray or guide working in suitable slide or upon the pivot.

In lieu of the shaft being turned manually by the winch handle, it may be driven by a hydraulic, steam, air, electric, or other motor.

Description of the Drawings.

(Here follows diagram marked p. 405*a*.)

Fig. 1 is an end elevation of the breech of the gun, the block being secured ready for firing.

Fig. 2 is a horizontal section of the same.

Fig. 3 is similar to Fig. 1, except that the block is unlocked.

Fig. 4 is a horizontal section of Fig. 3. The dotted lines shew the block home, the full lines shew it drawn back.

Fig. 5 is a horizontal section similar to Fig. 4, but with the block swung clear for loading.

Fig. 6 is a cross-section of gun through the breech thread and helical rack.

Referring to the various figures on this drawing, A is the gun, B the breech block, C the block ring, D the hinge plate on which C is pivotted, E is a shaft carrying a winch handle F on the boss of which is cut a segment of a pinion G, gearing with another segment H, fixed on block ring C. The shaft E also carries a quick-pitched worm I, gearing when the block is unlocked with a helical rack J, cut in one of the spaces between the threads in breech of gun. The rack J is continued beyond the breech through the hinge plate D and also some distance around the hinge boss on which it forms a segment of a worm wheel.

The breech is opened in the following manner, viz:—The handle F is turned from the position shewn in Fig. 1 to that shewn in Fig. 3 which causes the segment G to work in H, unlocking the block, the unlocking of block brings the worm I into gear with rack J, and the continued rotation of the shaft E draws the block first straight out into the position shewn by full lines in Fig. 4 and then into the angular position shewn on Fig. 5.

406 The rotation of the shaft E in the reverse direction first replaces the block, and then locks it.

In order to ensure the proper sequence of the sliding and swinging movements of the breech block a catch-bolt may be fitted to the block ring C, and breech plate D in the manner shown in Sauvee's specification No. 9813 of 1887 or any suitable equivalent arrangement.

Having now particularly described and ascertained the nature of

FIELDING'S COMPLETE SPECIFICATION.

No. 569.
Dashwell
v.
Grosvenor
p. 405a

18

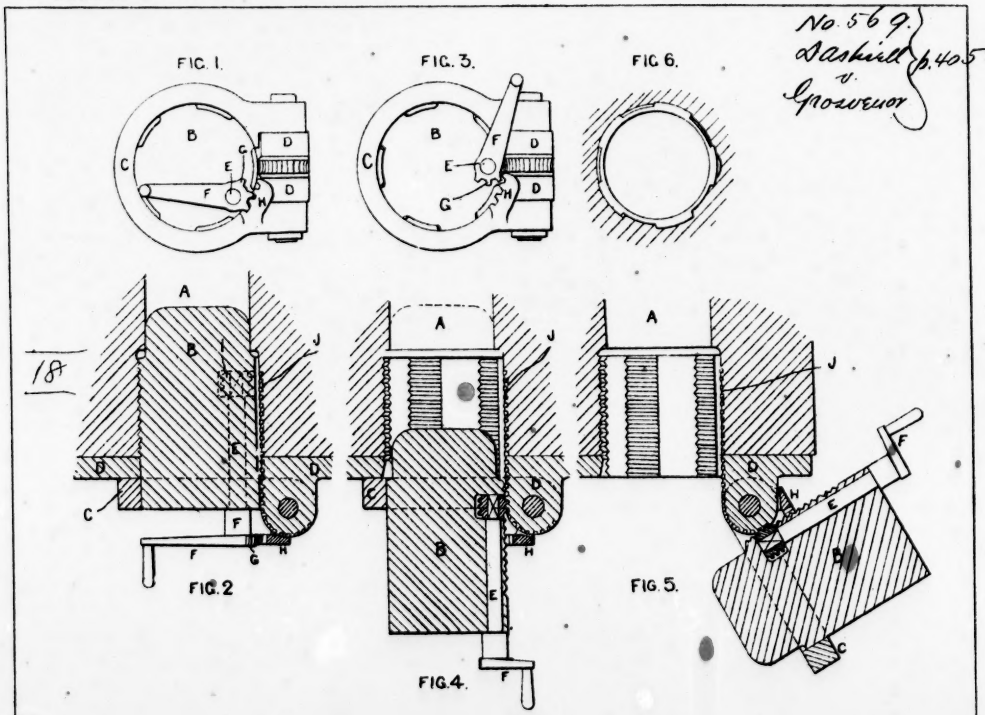

my said invention and in what manner the same is to be performed I declare that what I claim is:—

1. The construction and use of apparatus for working the breech blocks of breech-loading ordnance, substantially as herein described in reference to the accompanying drawings.

2. In combination with breech block B block ring C and hinge plate D, the use of a shaft E carrying worm I and toothed segment or finger G, working respectively in rack J and segment or slot H, arranged and operating substantially as described.

Dated this 8th day of July 1889.

JOHN FIELDING.

(Endorsed:) 3301. D, 93.

407 (7.)

R. B. D. No. 4. Wm. Herbert Smith, U. S. Commissioner. Fd May 30, '94.

U. S. Circuit Court, District of Maryland. In Equity.

GROSVENOR *et al.*
v.
DASHIELL.

(2–175*a*.)

DEPARTMENT OF THE INTERIOR,

(Vignette.)

UNITED STATES PATENT OFFICE.

To all persons to whom these presents shall come, Greeting:

This is to certify that the annexed is a true copy from the bound volumes of the library of this office of the provisional and complete specifications in the matter of the English letters patent of John Henry Richard Whinfield and James Horne, = 15188—date of application, October 23, 1888; complete specification left July 23, 1889; accepted October 23, 1889—for improvements relating to breech-loading guns and their mountings and to apparatus for working such guns.

In testimony whereof I, W. E. Simonds, Commissioner of Patents, have caused the seal of the Patent Office to be affixed this 23d day of February, in the year of our Lord one thousand eight hundred and ninety-three, and of the Independence of the United States the one hundred and seventeenth.

Seal Patent Office, United States of America.

W. E. SIMONDS,
Commissioner.

408 No. 15188. A. D. 1888.

Date of application, 23rd Oct., 1888; complete specification left 23rd July, 1889; accepted 23rd Oct., 1889.

Provisional Specification.

Improvements relating to breech-loading guns and their mountings and to apparatus for working such guns.

We, John Henry Richard Whinfield, and James Horne, both of 2 Victoria mansions, in the city of Westminster, engineers, do hereby declare the nature of this invention to be as follows:

Our invention relates to breech-loading guns and their mountings.

One object of our said invention is to provide for changing the armament of turrets which have been designed to carry muzzle-loading guns, that is to say, to provide for the use in such turrets of breech-loading in place of muzzle-loading guns.

Another object of our said invention is to provide improved means for facilitating the opening and closing of the breech of a gun, and for enabling such opening and closing to be effected in any position of the gun upon the recoil slides.

Our said invention, moreover, comprises various other improvements, whereby we provide for the washing out, loading and sighting of heavy breech-loading guns or ordnance, for controlling the rotation of the turret or turn-table, and for performing other operations necessary in working such guns.

In turrets provided with muzzle-loading guns, it is usually necessary to bring the guns to a fixed loading position, the shot-hoists and rammers being fixed on a deck outside the turret.

It is, therefore, frequently necessary to rotate or train the turret through a large angle in order to return the gun to the loading position, thus causing much loss of time.

According to one part of our invention, we substitute for the muzzle-loaders thus arranged, breech-loading guns with which we combine improved means whereby the loading thereof
409 may be effected in any position to which the guns may be trained or whilst they are being trained; by our improvements, moreover, we are enabled to accomplish this result without the use of apparatus comprising a central tube and charge-carrier for raising the ammunition into the loading position behind the breech of the gun, as described in the specifications of the following former letters patent, viz: No. 279 dated 2nd January 1884, No. 16736 dated 1st July 1884, No. 9375 dated 1st July 1887, and No. 10179 dated 20th July 1887. In some instances, however, where practicable, we prefer to employ such charge-elevating apparatus.

We mount the gun or guns upon fixed recoil slides or upon pivoted beams. In turrets wherein the centre of the platform or turn-table is not available for the introduction of a central charge-elevating apparatus such as that described in said former specifications, we provide circular overhead runner-ways, which are secured

to the under side of the upper deck and extend around the turret, and which are provided with suitable tackle whereby the ammunition may be brought into position to be placed upon loading trays carried by the turret. On the platform or turn-table behind the breech end of the guns, we provide suitable rails or tracks upon which are arranged to move charge-carriers adapted to receive the ammunition from the loading trays and convey the same into position for ramming into the guns. We prefer to employ revolving charge-carriers such as are described in the said former specifications No. 279 and No. 9375.

For moving the said carriers to and fro upon the rails, we prefer to employ hydraulic apparatus, that is to say, we connect each carrier with the ram or piston of a hydraulic cylinder secured to the platform or turn-table between the said rails; and we provide suitable shutters or covers for protecting the said rams or pistons and keeping them clean when moved out of their cylinders. We can, however, employ other suitable means for moving the said carriers along the rails. The apparatus for performing this operation is arranged to be controlled by levers from a convenient platform through the medium of gearing of any suitable description.

Behind each gun we mount upon the platform or turn-table
410 a telescopic rammer such as that described in the said former specification No. 16736 or that described in the specification of former letters patent No. 10180, dated 20th July, 1887. These rammers are so arranged that the charges and projectiles can thereby be pushed from the charge-carriers into the guns.

For controlling the rotation of the turret or turn-table, we provide an automatic device for cutting off the supply of steam or water to the motor used for effecting such rotation. In a central tube of the turret we provide a circular rack, with which is geared a pinion fixed on a vertical shaft. This shaft is connected by suitable gearing with a horizontal shaft having fixed thereon a long pinion geared with a pinion which also serves as a nut and which is fitted upon a screw-threaded part of another horizontal shaft suitably connected with the admission valve of the motor. This shaft is provided with suitable means for operating it by hand in the ordinary manner. The said nut is, however, so arranged, that, while the turret is rotating, the said nut will be driven by the long pinion and, by its action upon the said shaft, will cut off, or tend to cut off the supply of steam or water to the said motor. Therefore, to cause the turret to rotate, it is necessary to continually turn the hand wheel to counteract the effect of the travel of the nut pinion caused by the continuous rotation of the long pinion actuated by the circular rack and gearing, and as soon as the hand gear is released, the rotation of the turret will be automatically arrested.

To provide for facilitating the sighting or laying of the gun, in a mounting wherein the gun is arranged to recoil in the line of its axis upon a pivoted beam combined with hydraulic apparatus for raising and lowering it, we attach to the structure of the turret a bracket to which is pivoted a lever. One arm of this lever is connected to the ram of the hydraulic apparatus by a pin or stud work-

ing in a slot, or by other convenient means. The other arm of the said lever is provided with a toothed segment which is geared with a pinion connected by a suitable gearing with a vertical rack connected with the rear sight-bar.

In a mounting wherein the gun is arranged to recoil upon fixed slides and not necessarily in the line of its axis, and wherein the gun is supported by its trunnions in blocks arranged to be moved up and down by hydraulic or other power to permit of
411 obtaining the required angles of elevation and depression without employing a large port-hole or embrasure, we modify the construction of our apparatus for sighting or laying the gun as hereinafter described, that is to say:—We employ elevating mechanism wherein a rack is arranged to work between vertical guides on the carriage and is formed with a slot in which slides a nut on a vertical screw-spindle passing through bearings in the ends of the rack and suitably secured in the said rack. The said nut is attached to a pivot piece on the gun by a short link. A pinion is geared with the said rack and is arranged to be rotated for elevating the gun, the said nut and screw-spindle moving as part of the said rack during such elevation. To provide for the adjustment of the apparatus to suit the varying position of the trunnions in their vertical guides, as the gun is raised and lowered, the aforesaid screw-spindle is provided with a hand wheel secured thereto by a key fitting in a long keyway in the said spindle. By rotating this hand wheel in either direction, the screw-spindle may be turned so as to raise or lower the nut in the slot of the rack. By means of a vernier scale on the nut and another scale behind it, the quadrant elevation of the gun can be read. The scale plate is adjustable, to suit the varying vertical position of the trunnions of the gun, by means of a nut working on a vertical screw-spindle, on the upper end of which is a pinion geared with a spur wheel on the main screw-spindle. This is a slight modification of elevating mechanism which has been heretofore employed and in which the elevating pinion being set in motion through an ordinary train of spur wheels and pinions. We combine, with the said elevating pinion, mechanism such as that described in the specification of former letters patent No. 9373 dated 1st July 1887 and illustrated in figures 1 to 4 of the drawings accompanying the said specification. Moreover we prolong the said main screw-spindle and provide the upper end thereof with a suitable head arranged to work in or upon or between bars coupled to two links suspended from pivots which are equidistant from the upper surface of the recoil slide, so that the said bars will always be parallel to the fixed line of recoil. One of the said links is provided with an arm having thereon a toothed segment, which is connected by suitable gearing with a rack carrying the rear sight-bar.

Our improved mechanism for opening and closing the
412 breech is constructed as hereinafter described, that is to say,—we employ devices for partially rotating the breech screw, withdrawing the same from the breech and swinging or turning it upon or about a hinge pin to permit the washing out and loading

of the gun; and we arrange these devices in combination with hydraulic apparatus for operating them. We sometimes employ devices substantially similar in construction and operation to those described in the specifications of former letters patent No. 3402 dated 5th March 1887, and No. 9813 dated 12th July 1887. For operating these devices, however, we employ hydraulic apparatus which is more advantageous and effective than that described in the said specification No. 9813. In the apparatus therein described, the hydraulic cylinder is arranged to move transversely to the axis of the gun between the recoil slides, and in order to obtain the required travel or movement of the said cylinder for performing the operations above mentioned, either the recoil slides must be arranged at such a distance apart as to make the gun carriage occupy an objectionable amount of space in the turret or barbette, or trains of gearing must be used which are inconvenient in respect of their proportions or otherwise.

In our improved hydraulic apparatus, we provide for obtaining the requisite travel or movement of the hydraulic cylinder by arranging the said cylinder to move in a direction parallel to the recoil slides. For this purpose, the piston-rod is firmly attached to one of the recoil slides and the cylinder is arranged to move on the said rod in or upon guides on the said slide. The said cylinder is provided with a rack that is geared with a pinion formed or fixed on a bevel wheel which is fitted to rotate upon a pin or stud fixed in the said slide. This bevel wheel is geared with another bevel wheel mounted upon a shaft which is firmly connected with the gun or with the cradle carrying the same, and which is parallel to the piston-rod. The last-named bevel wheel is carried in a bearing or bracket on the recoil slide and is arranged to rotate with its shaft which is perfectly square; therefore the gearing can be operated whatever may be the position of the gun upon the recoil slides. The said shaft is geared by means of bevel wheels with the vertical shaft or hinge pin of the breech-screw carrier, as described in the said specification No. 3402.

In gun mountings wherein we employ charge-carriers as
413 above described or as described in the aforesaid specifications No. 279, No. 16736, No. 9375 and No. 10179, and wherein the charge-carrier must be brought close to the breech of the gun, we prefer to modify the construction of the mechanism described in the said former specification No. 9813 as follows, viz:—

We provide the breech screw with a toothed segment which is geared with a rack formed with a sleeve. This sleeve is fitted loosely upon a nut formed with a pinion and fitted upon a vertical screw-spindle supported in bearings on the breech-screw carrier. The said screw-spindle is connected by suitable gearing with the hinge pin of the said carrier and the said hinge pin is arranged to be turned by means of the hydraulic apparatus above described. By the rotation of the said hinge pin and screw-spindle the said nut, pinion and rack are raised and the breech screw thus turned to disengage it from the breech. The pinion formed with the nut is made with helicoidal teeth so that it will, when the breech screw

has been partially rotated by the action of the said rack, gear with the screw-threads of the said breech screw and effect the withdrawal thereof. By the continued rotation of the hinge pin the breech screw will then be turned or swung upon or about the said hinge pin, and moved clear of the breech so that the charge-carrier can be brought into the proper position for loading the gun.

Our improved hydraulic apparatus can also be applied to other devices for opening and closing the breech in the manner above described.

For washing out the gun after each discharge, we provide a cylindrical chamber which is divided into two compartments by radial partitions. In the larger of these compartments is arranged a vane which is formed or fixed on a central shaft extending through a stuffing box in one end of the said chamber and supported in a suitable bearing at the other end thereof. On this shaft outside the cylinder is fixed a pinion geared with a rack formed or fixed on a hydraulic cylinder arranged to move to and fro on a fixed piston, so that the said vane may be partially rotated alternately in either direction. The larger compartment of the said chamber is connected near each of the said partitions with a tank or reservoir containing the liquid to be used for washing out
414 the gun, the apertures being provided with suitable non-return valves. The smaller compartment of the said chamber is connected with the pipe or tube for delivering the said liquid into the bore of the gun, and communicates with the larger compartment through apertures in the partitions provided with suitable delivery valves. Each movement of the hydraulic cylinder causes the said vane to move around from one of the radial partitions towards the other, and the said vane, in each partial rotation thereof, draws liquid from the tank or reservoir into the larger compartment of the said chamber and at the same time forces liquid from the said chamber through the smaller compartment and through the said pipe or tube into the gun. The apparatus is therefore, always ready for use and there is no necessity to wait for the automatic re-adjustment of any of the parts, as in apparatus heretofore devised for washing out guns.

The aforesaid tank or reservoir is sometimes arranged like a jacket around the said cylindrical chamber. It may, however, be arranged in any other convenient place and be connected by pipes with the said chamber.

In some instances, the cylindrical chamber is arranged to carry the vane and to be partially rotated alternately in either direction, and the central shaft and radial partition are fixed, the shaft being made hollow to serve for the discharge of the liquid.

Instead of the hydraulic cylinder for operating the washout apparatus, we sometimes employ pneumatic or other suitable apparatus for this purpose.

Dated this 22nd day of October 1888.

HASELTINE, LAKE & CO.,
45 *Southampton Buildings, London,*
Agents for the Applicants.

No. 15188. A. D. 1888.

Date of application, 23rd Oct., 1888; complete specification left, 23rd July, 1889; accepted, 23rd Oct., 1889.

Complete Specification.

Improvements relating to breech-loading guns and their mountings and to apparatus for working such guns.

We, John Henry Richard Whinfield, and James Horne, 415 both of 2 Victoria mansions, in the city of Westminster, engineers, do hereby declare the nature of this invention and in what manner the same is to be performed, to be particularly described and ascertained in and by the following statement:

Our invention relates to breech-loading guns and their mountings.

One object of our said invention is to provide for changing the armament of turrets which have been constructed to carry muzzle-loading guns, that is to say, to provide for the use, in such turrets, of breech-loading in place of muzzle-loading guns. Our improvements are, however, applicable to other turret or barbette mountings.

Another object of our said invention is to provide improved means whereby the opening and closing of the breech of a gun may be effected in any position of the gun upon the recoil slides.

Our said invention, moreover, comprises various other improvements whereby we provide for the washing out, loading and sighting of heavy breech-loading guns, for controlling the rotation of the turret or turn-table, and for performing other operations necessary in working such guns.

In turret or barbette mountings, the shot hoists and rammers are usually secured to a deck outside the turret or turn-table: the guns, therefore, require to be brought to a fixed loading position after firing. For this purpose, it is frequently necessary to rotate or train the turret or turn-table through a large angle, and much loss of time is thus caused.

According to one part of our invention we combine, with breech-loading guns, improved means whereby the loading thereof may be effected in any position to which the guns may be trained or whilst they are being trained, and whereby we are enabled to accomplish this result without the use of apparatus comprising a central tube and charge-carrier for raising the ammunition into the loading position behind the breech of the gun as described in the specifications of the following former letters patent, viz:—No. 279, dated 2nd January, 1884; No. 16736, dated 20th December, 1884; No. 9375, dated 1st July, 1887; No. 10179, dated 20th July, 1887; and No. 11732, dated 14th August, 1888. Where practicable, however, we prefer to employ charge-elevating apparatus of the kind or class described in the said former specifications.

416 In the accompanying drawings we have shown how our said invention may be conveniently and advantageously carried into practice.

(Here follow diagrams marked pp. 416*a* to 416*k*, incl.)

Figure 1 is a plan, partly in horizontal section, of a turret with two guns mounted therein according to our said invention, a portion of the armoured wall and upper deck being removed.

Figure 2 is a vertical central section of the said turret, some of the parts being removed.

Figure 3 is a vertical section on the line x, x, figure 2, drawn to an enlarged scale.

Figure 4 is a vertical central section of the said turret, also drawn to an enlarged scale, showing various features of our said invention not illustrated in figures 1 to 3.

Figure 5 is a vertical section on the line x^1, x^1, figure 4, some of the parts being removed.

Figures 6 and 7 are plans partly in horizontal section, drawn to the same scale as figures 4 and 5, the guns and parts of the mounting being removed.

Figure 8 shows a portion of figure 4 drawn to a still further enlarged scale.

Figure 9 is a rear elevation, partly in transverse section.

Figure 10 a vertical longitudinal section on the lines x^2, x^2, and x^3, x^3, figure 9, and—

Figure 11 a plan, partly in horizontal central section, drawn to an enlarged scale, illustrating our improved means for opening and closing the breech.

Figure 12 is a vertical central section of one form of our improved washout apparatus.

Figure 13 is a horizontal section on the line y, y, figure 12.

Figure 14 is a horizontal section on the line y^1, y^1, figure 12.

Figure 15 is a side elevation.

Figure 16 a vertical central section on the lines x^4, x^4, figure 15, and—

Figure 17 a plan, some of the parts being removed, illustrating another form or modification of the said washout apparatus.

Like letters indicate corresponding parts throughout the drawings.

A is the armoured wall of the turret; B is the floor, platform or turn-table thereof. C, C are the guns, each of which is
417 mounted upon a top carriage D arranged to recoil with the gun upon a slide E capable of vertical movement about a horizontal pivot E^1.

In turrets wherein the centre of the platform or turn-table is not available for the introduction of a central charge-elevating apparatus such as that described in the said former specifications, we provide the following means whereby the gun may be loaded in any position to which it may be trained or whilst it is being trained, that is to say: We employ circular overhead runnerways

A.D. 1888. Oct. 23. No. 15,188.
WHINFIELD & another's Complete Specification.

Jc SHEETS
SHEET 1.

No. 569
Dashiell
v.
Grosvenor
p. 416a

Fig. 1.

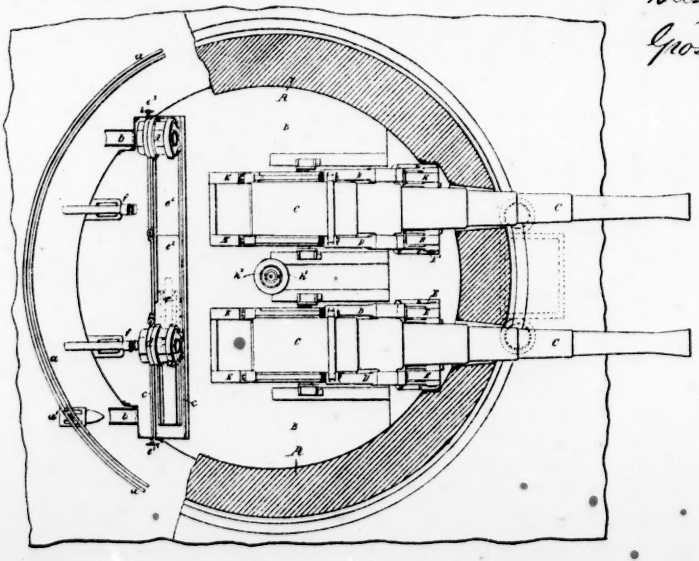

5

A.D. 1888 Oct. 23. Nº 15,188.
WHINFIELD & another's Complete Specification.

(12 SHEETS)

SHEET 2.

Fig. 2.

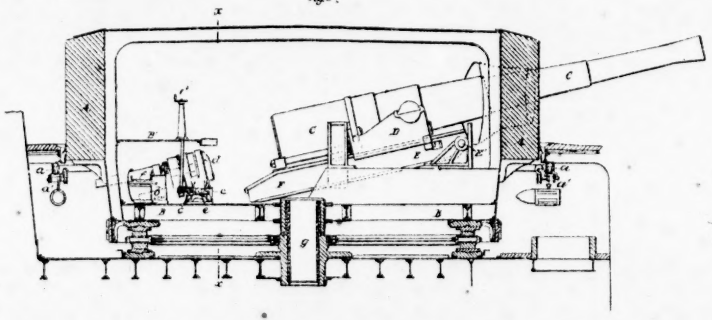

6

No. 569.
Hashiell
v
Grosvenor
p. 416 6

SHEET 3.

Fig. 3.

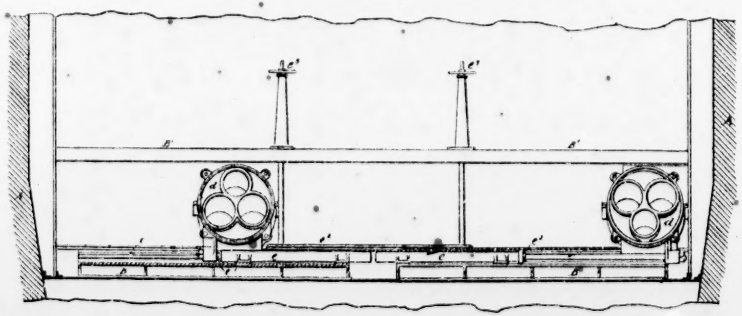

No. 569.
Dashwood v. Grosvenor. } p 416 c

Fig 6.

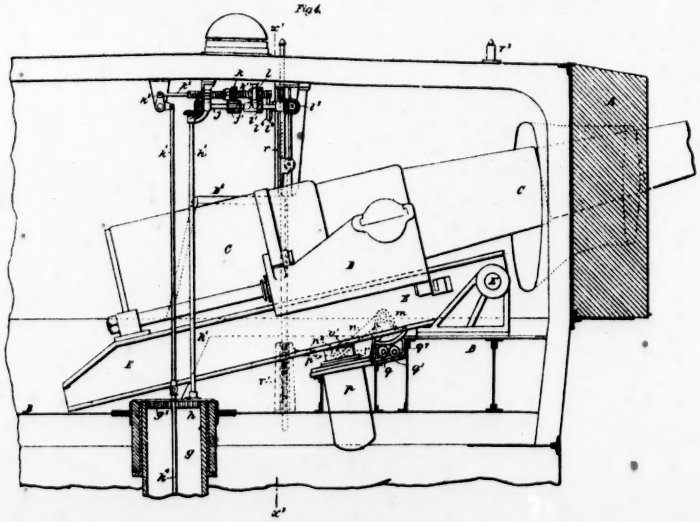

7.

A.D. 1888. Oct. 23. No. 15,188.
WHINFIELD & another's Complete Specification.

(12 Sheets)
Sheet 2

No. 569.
Bashell
v.
Grosvenor.
} p. 416 d

Fig. 5.

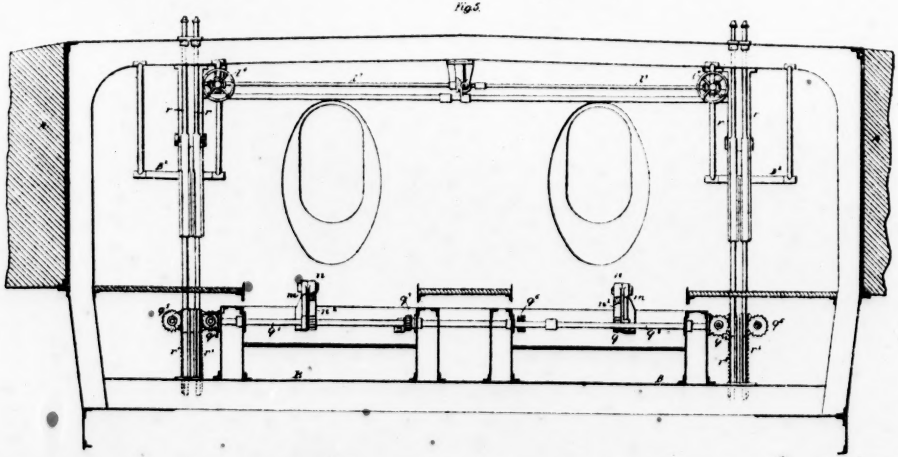

8

9

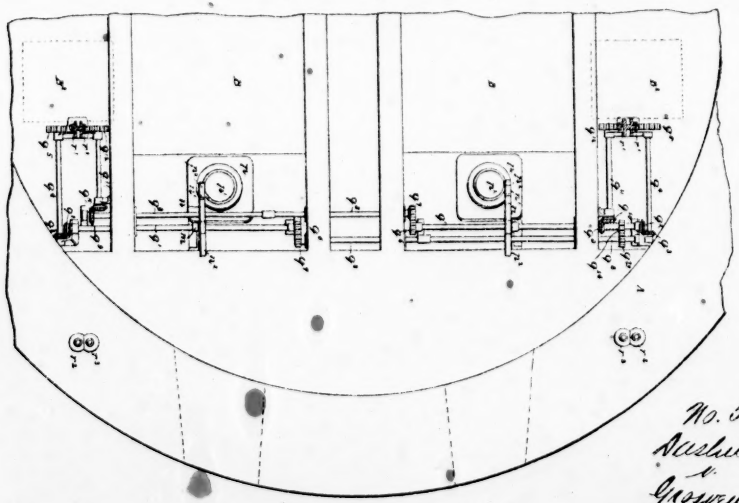

Fig. 6

No. 569.
Dashiell
v.
Grosvenor
p. 416e

A.D. 1888. Oct. 22. No. 15,188
WHINFIELD & another's COMPLETE SPECIFICATION

(4 SHEETS)
SHEET 7

10

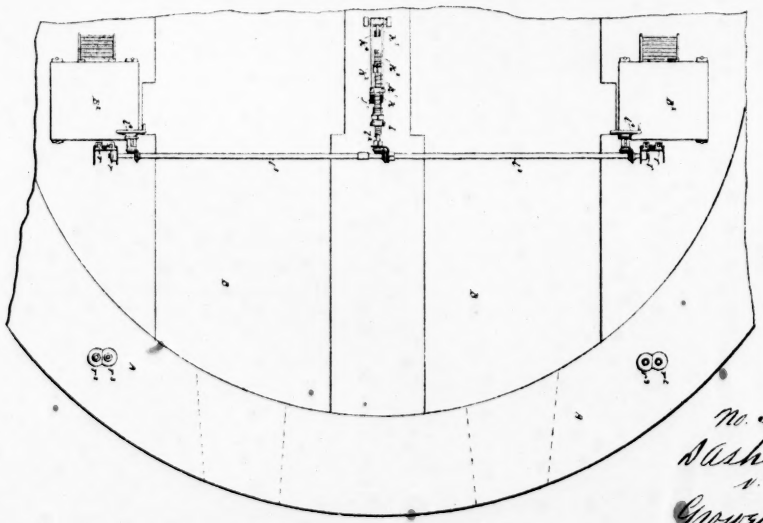

Fig. 7.

No. 569.
Dashiell
v.
Grosvenor.
p. 416 f

A.D. 1886. Oct. 23. No. 15,188.
WHINFIELD & another's Complete Specification.

(3 Sheets)
Sheet 8.

Fig. 8.

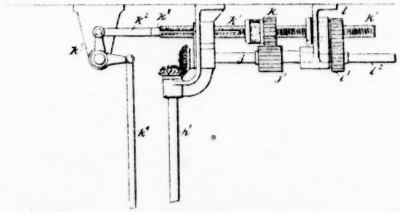

Fig. 12.

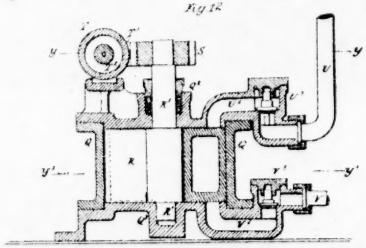

11

Fig. 13.

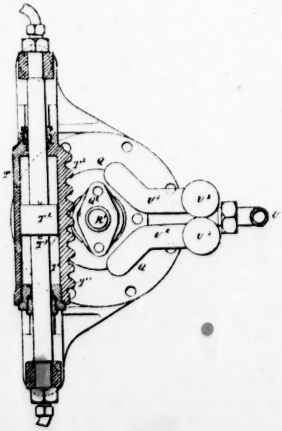

Fig. 14.

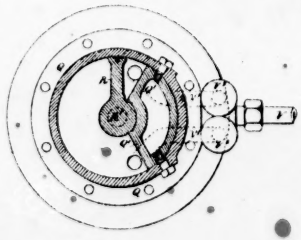

No. 569.
Dashwell
v.
Grosvenor
p. 416 g

12

Fig. 9.

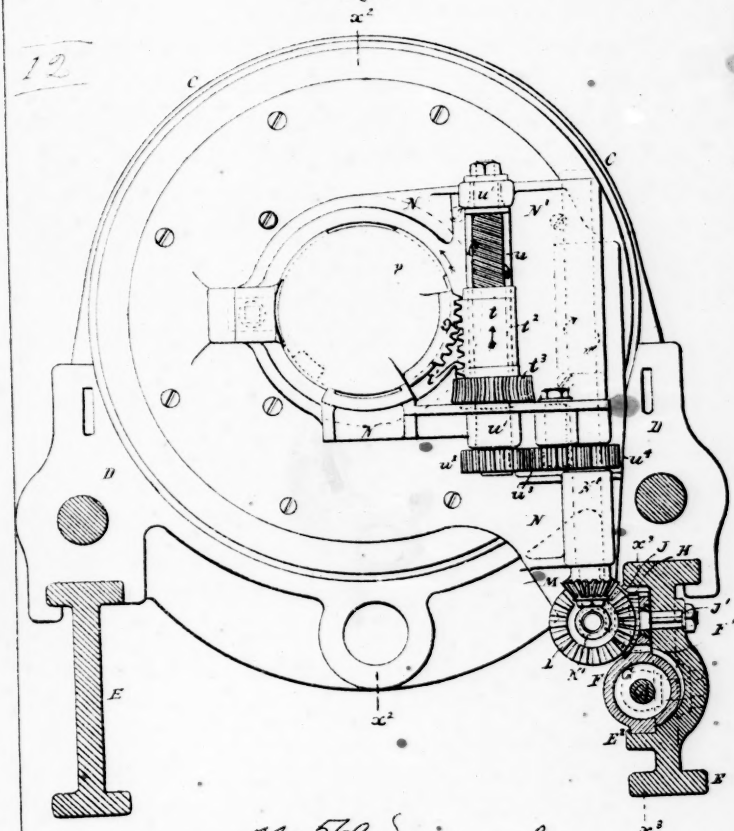

No. 569.
Dashwell
v.
Grosvenor
p 416 h

No. 569.
Dashiell
v.
Grosvenor.
416

13

Fig 10.

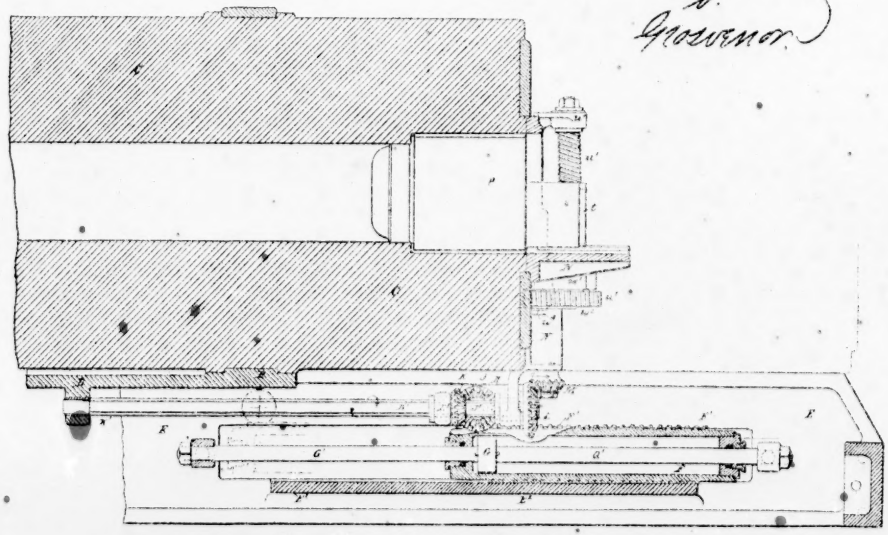

A.D. 1886. Oct. 23. N° 16,188.
WHINFIELD & another's Complete Specification.

(12 Sheets)
Sheet 11.

Fig. 11.

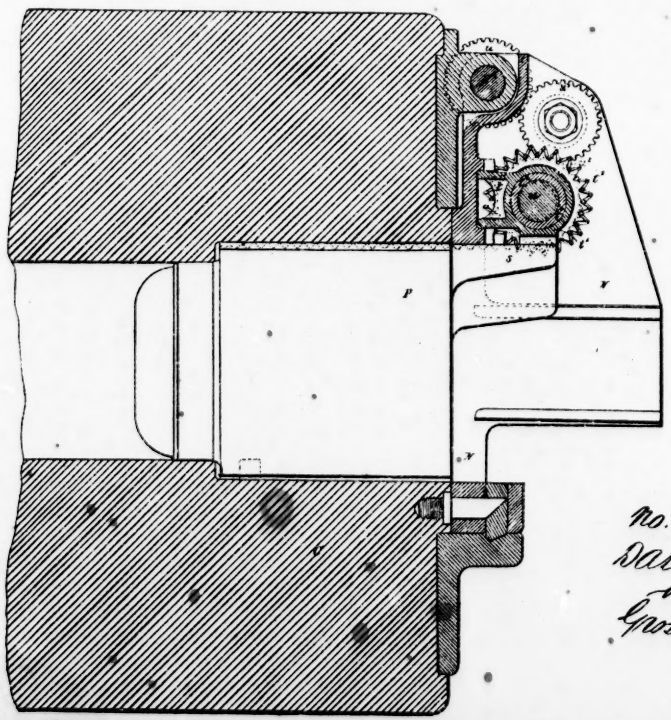

14

No. 569.
Dathiell
v.
Grosvenor
p. 416

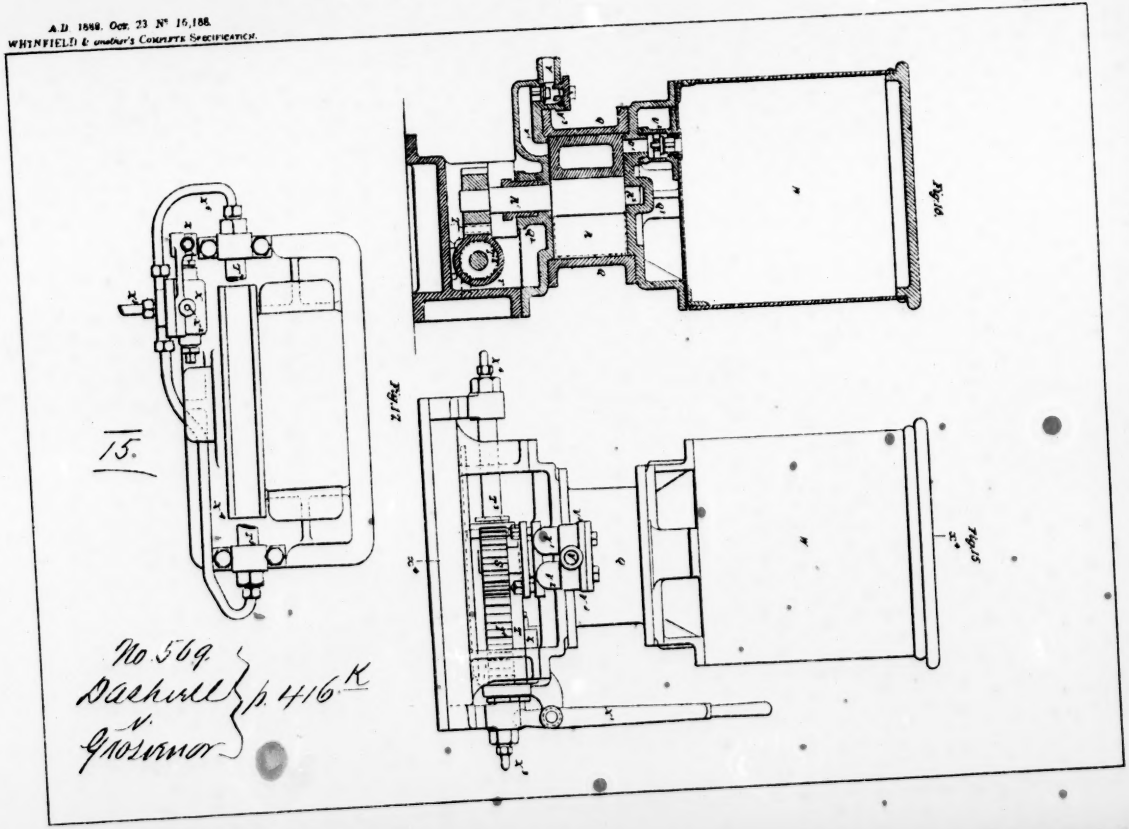

15.

No 569
Dashwell } p. 1416 K
N. Gloucester

a which are secured to the under side of the upper deck and extend around the turret, and which are provided with suitable tackle as at a^1 whereby the ammunition may be brought into position to be placed upon loading trays b carried by the turret, so that the ammunition may be passed through ports in the side of the turret. On the platform or turn-table behind the breech end of the guns we provide suitable rails, tracks or slides c upon which are arranged to move charge-carriers d adapted to receive the ammunition from the loading trays b and to convey the same into position for ramming into the gun. We prefer to employ for this purpose revolving charge carriers such as are described in the said former specifications No. 279 and No. 9375.

For moving the said carriers to and fro upon the rails or slides c we find it advantageous to employ hydraulic apparatus, as follows, that is to say:—We connect each carrier d with the ram or piston e^1 of a hydraulic cylinder e secured to the platform or turn-table between the said rails or slides c, and we provide suitable shutters or covers e^2 for protecting the said rams or pistons and keeping them clean when moved out of their cylinders. The said hydraulic apparatus is arranged to be controlled by levers or hand wheels (not shown in the drawings) arranged in any convenient position. Hand wheels e^3 operated from the platform B^1 or from the outside of the turret are, moreover, provided for rotating the charge-carriers d about their axis so as to bring the projectile and half charges of powder successively in front of the rammer, the said hand wheels being connected with the charge-carriers by suitable gearing so that each of the said carriers, whilst free to move along the rails or slides c, may be rotated when required from one or the other of the two stations.

We can, however, employ other convenient means for moving
418 the said carrier d along the rails, or slides c, and for rotating the said carriers about their axis from the said stations whatever may be the position of the said carriers upon their rails or slides. By these means we obviate the necessity for the gunner's movement from one to the other end of the said rails or slides for the purpose of rotating the charge-carrier.

We can, if desired, employ means other than those above described for conveying the ammunition to the aforesaid charge-carriers which convey it from the circumference of the turret or turn-table to the loading position.

Behind each gun we mount upon the platform or turn-table B a telescopic rammer f such, for instance, as that described in the said former specification No. 16736, or that described in the specification of former letters patent No. 10180 dated 20th July 1887. These rammers are so arranged that the charges and projectiles can thereby be pushed from one or the other of the charge-carriers d into the corresponding gun, when the said charge-carrier is in the loading position. The platform B is provided with a central tube g forming the pivot of the turret and serving also as a passage for the rod hereinafter mentioned which connects the turning engine below with a lever in the turret, and for other purposes.

For controlling the rotation of the turret or turn-table we pro-

vide apparatus comprising an automatic device for cutting off the supply of steam or water to the motor used for effecting such rotation; this device is illustrated in figures 4 to 8. In the central tube g of the turret we provide a circular rack g^1 with which is geared a pinion h fixed on a vertical shaft h^1. This shaft is connected by suitable gearing with a horizontal shaft j on which is fixed a long pinion j^1. This pinion is geared with a pinion k which also serves as a nut and which is fitted upon a horizontal screw-shaft k^1, supported in suitable bearings so that it is free to move longitudinally but is restrained from rotation. The said screw-shaft k^1, is suitably connected with the admission valve of the motor. In the apparatus shown, this connection is made through the medium of links k^2, a bell-crank lever k^3 and a rod or link k^4 passing through the centre of rotation of the turret. Suitable means are provided for operating the screw-shaft k^1 by hand; for instance, the said shaft is passed through a nut pinion l which is geared with another
419 pinion l^1 fixed on a shaft l^2 connected by suitable gearing with another shaft l^3, which is arranged to be operated by one or the other of two hand wheels l^4 from the corresponding sighting platform B^2 or other convenient station. The nut k is, however, so arranged that, while the turret is rotating, the said nut will be rotated, in a direction opposite to that of the nut pinion l, by the circular rack g^1 through the medium of the pinion h, the shafts h^1 and j, and the long pinion j^1, and, by moving along the said shaft k^1, will cut off, or tend to cut off the supply of steam or water to the said motor. Therefore, to keep the turret rotating, it is necessary to continually turn the aforesaid hand wheel and thus counteract the effect of the travel of the nut pinion k caused by the continuous rotation of the same by the pinion j^1, and, as soon as the hand wheel ceases to be turned, the rotation of the turret will be automatically arrested.

In cases where the central tube is not available, we employ, for the purpose above specified, a circular rack bolted or otherwise secured to the floor or platform B; or we employ other suitable means for transmitting rotary motion from the turret to the shaft j for the purpose specified. If the motor for rotating the turret or turn-table is carried on the platform, the pinion h instead of being geared with the rack g^1 may be geared with the motor direct or with any other suitable part of the rotating mechanism.

The arrangement of controlling mechanism above described is applicable in cases where the turret or turn-table is capable of rotation through a portion of a circle but cannot be turned a complete revolution. The shaft k^1 must have sufficient travel to permit this movement of the turret or turn-table without the withdrawal of the said shaft from its bearings.

In mountings such as that hereinbefore described wherein the gun is arranged to recoil in the line of fire upon a slide which is capable of adjustment about a horizontal pivot and which is combined with hydraulic apparatus for raising and lowering it to effect the vertical pointing or elevation of the gun, we provide as hereinafter described for facilitating the sighting or laying the gun, that

is to say we attach to the structure of the turret brackets m to which are pivoted levers n. One arm of each of these levers is connected to the ram p^1 of the corresponding hydraulic elevating cylinder p by a pin or stud p^2 working in a slot n^1 in the lever n; or by other convenient means. The other arm of the said lever is provided with a toothed segment n^2 which is geared with a pinion o fixed on a shaft o^1 and connected by suitable gearing with a vertical rack r^1 connected with the rear sight-bar r.

The apparatus shown in figures 4 to 8 is so arranged that both guns may be sighted from one or the other of two positions. For this purpose, each of the shafts q^1 is connected to a sight-bar r^1 on each side of the turret as follows, viz: Each shaft q^1 has fixed thereon a bevel wheel q^2, which is geared with a bevel wheel q^3 fixed on a shaft q^4 on which is also fixed a spur pinion q^5 geared with one of the rack-bars r^1. The shafts q^1 are geared with the shafts q^8 through pinions q^6 q^7. The shaft q^8 on the right-hand side of the turret is connected with the corresponding rack-bar r^1 by a shaft q^{11} through bevel wheels q^9, q^{10} and a spur pinion q^{12}. The shaft q^8 on the left-hand side of the turret is connected with the corresponding rack-bar r^1 through two spur pinions q^{13}, q^{14}, the pinion q^{13} being keyed upon the shaft q^8 and the pinion q^{14} mounted loosely on the shaft q^1; the corresponding bevel wheel q^9 is keyed on the boss of the pinion q^{14} which is prolonged for this purpose. The said shaft q^8 is thus connected to the shaft q^{11} without interfering with the motion of the shaft q^1 and each sight is thereby connected with its corresponding gun, *i. e.* the left-hand sights in each case are connected with the left-hand gun and the right-hand sights with the right-hand gun. r^2 r^3 are the fixed fore sights.

The pipes for conducting the liquid to the various hydraulic cylinders may extend through the central tube in the usual manner.

Our improved mechanism for opening and closing the breech is constructed as hereinafter described, that is to say, we employ devices whereby the partial rotation of the breech screw, the withdrawal of the same from the breech and the swinging or turning thereof upon or about a hinge pin to permit the washing out and loading of the gun may be effected by the continuous rotation of a shaft; and we combine with these devices hydraulic apparatus for operating the same. We sometimes employ the devices described in the specifications of the following former letters patent, viz: No. 3402, dated 5th March 1887, No. 9813 dated 12th July 1887, and No. 7435 dated 28th March 1888. For operating such devices, however, we provide apparatus which is more advantageous and effective than that described in the said specification No. 9813. In the apparatus therein described, the hydraulic cylinder is arranged to move transversely to the axis of the gun between the recoil slides, and in order to obtain the required motion for performing the operations of turning the breech screw, withdrawing the same and swinging it upon or about the hinge pin, the recoil slides must be arranged at such a distance apart as to make the gun carriage occupy an objectionable amount of space in the turret

or barbette, or trains of gearing must be used which are inconvenient in respect of their proportions or otherwise.

In our improved apparatus, we provide for obtaining the requisite travel or movement of the hydraulic cylinder by arranging the said cylinder to move in a direction parallel to the recoil slides or to the axis of the gun.

In figures 9, 10, and 11, we have shown a convenient and advantageous arrangement of our apparatus for opening and closing the breech. F is a hydraulic cylinder which is arranged to move to and fro in or between guides E^2 on one of the recoil slides E, and in which is fitted a piston G the rod G^1 of which is firmly attached to the said recoil slide. The said cylinder F is provided with a rack F^1 which is geared with a pinion H formed or fixed on a bevel wheel J which is fitted to rotate upon a pin or stud J^1 fixed in the said recoil slide. This bevel wheel is geared with another bevel wheel K mounted upon a shaft K^1 which is connected with the gun or with the cradle or top carriage D, and which is parallel to the piston-rod G^1. The bevel wheel K is carried in a bearing or bracket E^3 on the recoil slide E and is arranged to rotate with its shaft K^1, which is preferably square as shown or is otherwise suitably connected with the said bevel wheel so that it can slide longitudinally therein but will rotate therewith. By this arrangement, the breech mechanism can be operated whatever may be the position of the gun upon the recoil slides. The said shaft K is geared by means of bevel wheels L, M with the vertical shaft or hinge pin N^1 of the breech-screw carrier N. The mechanism for transmitting the required motion from the hinge pin N^1 to the breech screw P may be of any suitable construction.

In gun mountings wherein we employ charge-carriers as
422 above described or as described in the aforesaid specifications No. 279, No. 16736, No. 9375, No. 10179 and No. 11732, and wherein the breech screw requires to be moved clear of the breech to permit the charge-carrier to be brought into the loading position, we find it advantageous to employ the mechanism shown in figures 9, 10 and 11, which is a modification of that described in the said former specification No. 7435, and is constructed as follows, viz: The breech screw P is provided with a toothed segment *s* which is geared with a rack t^1 formed on a sleeve *t*. This sleeve is fitted loosely upon a nut t^2 formed with a pinion t^3 and fitted upon a vertical screw-spindle *u* supported in bearings u^1 on the breech-screw carrier N. The said screw-spindle *u* has fixed thereon a pinion u^2 geared through an intermediate wheel u^3 with a pinion u^4 fixed on the hinge pin N^1 of the said carrier.

By the rotation of the said hinge pin N^1 and screw-spindle *u*, the nut t^2, the pinion t^3 and the sleeve *t* provided with the rack t^1 are raised and the breech screw thus turned to disengage it from the screw-threads in the breech of the gun. The pinion t^3 is made with helicoidal teeth so that it will, when the breech screw has been partially rotated by the action of the said rack t^1, gear with the screw-threads of the said breech screw after the manner of a rack, and effect the withdrawal thereof by the continued rotation of the

hinge pin; the breech screw will then be turned or swung in its carrier upon or about the said hinge pin, and moved clear of the breech so that the charge-carrier can be brought into the proper position for loading the gun.

For washing out the gun after each discharge, we provide the improved apparatus hereinafter described and illustrated in figures 12 to 20.

In the form or modification of our washout apparatus shown in figures 12, 13 and 14, Q is a cylindrical chamber, which is divided into two compartments by radial partitions Q^1. In the larger of these compartments is arranged a vane or piston R which is formed or fixed on a central shaft R^1 extending through a stuffing box Q^2 at one end of the said chamber Q and supported in a suitable step or bearing Q^3 at the other end thereof. On this shaft outside the cylinder is fixed a pinion S which is geared with a rack T^1 formed or fixed on a hydraulic cylinder T. This cylinder is arranged
423 to move to and fro on a fixed piston T^2 so that the said vane may be partially rotated alternately in either direction, the said vane, in each stroke or movement of the said cylinder, moving from a position near one of the partitions Q^1 to near the other of the said partitions. The larger compartment of the said chamber Q is connected, by a pipe U provided with branches U^1, U^2 which open into the said chamber near each of the said partitions, with a suitable tank or reservoir containing the liquid to be used for washing out the gun, the said branch pipes being provided with suitable non-return valves U^3. The said larger compartment of the chamber Q is also connected (by branch pipes V^1, V^2 provided with non-return valves V^3) in a similar manner with a pipe V for delivering the said liquid into the bore of the gun. Liquid under pressure is admitted to the cylinder T through the piston-rod T^3 which is made hollow for this purpose and is connected with a suitable distributing valve.

Each stroke or movement of the hydraulic cylinder T, as above stated, causes the vane R to move around from one of the radial partitions towards the other; the said vane, in each partial rotation thereof, draws liquid from the aforesaid tank or reservoir into the larger compartment of the said chamber and at the same time forces liquid from the said chamber through the pipe V into the gun. The apparatus is, therefore, always ready for use and there is no necessity to wait for the automatic re-adjustment of any of the parts as in apparatus heretofore employed for washing out guns.

Instead of the two partitions Q^1 we sometimes use a single partition for separating the inlet and outlet apertures.

In some instances, the cylindrical chamber is arranged to carry the vane and to be partially rotated alternately in either direction, and the central shaft and radial partition are fixed, the shaft being made hollow to serve for the discharge of the liquid.

In the modification of our washout apparatus shown in figures 15, 16 and 17, a tank or reservoir W for containing the liquid is arranged above the chamber Q. The pipes U^1, U^2, in this case, extend directly to the said tank, suitable non-return valves U^3 being pro-

vided in the said pipes. X is a valve arranged to be operated by a lever X^1 for the purpose of distributing and controlling the flow of water to the hydraulic cylinder T through the hollow rod
424 T^3. X^2, X^3 are pipes for connecting the said valve with the pressure main and exhaust. X^4, X^5 are pipes connecting the said valve with the ends of the cylinder T.

If desired the hydraulic cylinder may be connected with a three-armed lever, a pin or stud projecting from the said cylinder into a slot in one of the arms of the said lever and each of the other arms of the said lever being coupled to the plunger of a pump arranged within the supply tank or reservoir, so that the liquid will flow by gravity into the pump chambers through suitable valves.

Instead of the hydraulic cylinder for operating our washout apparatus above described, we sometimes employ a hand lever or pneumatic or other suitable apparatus.

Having now particularly described and ascertained the nature of our said invention and in what manner the same is to be performed we wish it understood that we do not confine ourselves to gun mountings wherein the gun is mounted upon a recoil slide pivoted at its forward end to the turn-table, as our improvements are also applicable to other gun mountings, and we claim:—

First. A charge-carrier mounted on slides or rails on the platform or turn-table and arranged to convey the ammunition from the circumference of the turret or turn-table into the loading position behind the breech of the gun, for the purpose above specified.

Second. The combination, with the said slides or rails and a revolving charge-carrier travelling thereon, of means whereby the said charge-carrier may be rotated from one or more stations, for the purpose above specified.

Third. The combination, with a charge-carrier arranged to move on rails or slides on the platform or turn-table as above specified, of means substantially such as are herein described for conveying the ammunition to the said carrier, for the purposes set forth.

Fourth. The combination, with a rotating turret or turn-table, of the mechanism constructed substantially as described with reference to figures 4 to 8 of the drawings for controlling the supply of fluid to the motor which rotates the said turret or turn-table, as, and for the purposes, above specified.

Fifth. The combination, with the ram of a hydraulic cylinder for elevating a gun, of means whereby the sight-bar will be
425 & 426 caused to move with the gun in the up-and-down movement of the said ram, substantially as, and for the purpose, set forth.

Sixth. In combination with mechanism for opening or closing the breech of a gun by the continuous rotation of a shaft, a hydraulic apparatus the cylinder of which is parallel to the gun slide or to the axis of the gun and which is arranged to operate the said mechanism whatever may be the position of the gun upon the slide.

Seventh. The gun mounting having our improvements embodied

therein or incorporated therewith substantially as described with reference to figures 1 to 8 of the accompanying drawings.

Eighth. The improved apparatus constructed substantially as described with reference to figures 9, 10 and 11 of the accompanying drawings and operating as, and for the purposes, above specified.

Ninth. The improved washout apparatus constructed substantially as described with reference to figures 12, 13 and 14, or to figures 15, 16 and 17 of the drawings and operating as, and for the purpose, above specified.

Dated this 23rd day of July, 1889.

HASELTINE, LAKE & CO.,
45 *Southampton Buildings, London,*
Agents for the Applicants.

(Endorsed:) 3301. D, 93.

427 (2.)

R. B. D. No. 5. Wm. Herbert Smith, U. S. Commissioner. F'd May 30, 94.

U. S. Circuit Court, District of Maryland. In Equity.

GROSVENOR *et al.*
vs.
DASHIELL.

(2–175*a*.)

DEPARTMENT OF THE INTERIOR,

(Vignette.)

UNITED STATES PATENT OFFICE.

To all persons to whom these presents shall come, Greeting:

This is to certify that the annexed is a true copy from the bound volumes of the library of this office of the provisional and complete specifications in the matter of the English letters patent of Thorsten Nordenfelt, # 7195—date of application, May 17, 1887; complete left, February 16, 1888; complete accepted, March 16, 1888—for improvements in breech mechanism for ordnance.

Seal Patent Office, United States of America.

In testimony whereof I, W. E. Simonds, Commissioner of Patents, have caused the seal of the Patent Office to be affixed this 23d day of February, in the year of our Lord one thousand eight hundred and ninety-three, and of the Independence of the United States the one hundred and seventeenth.

W. E. SIMONDS,
Commissioner.

428 Date of application, 17th May, 1887; complete left, 16th Feb., 1888; complete accepted, 16th Mar., 1888.

A. D. 1887, 17th May. No. 7195.

Provisional Specification.

Improvements in breech mechanism for ordnance.

I Thorsten Nordenfelt of 53 Parliament street in the city of Westminster civil engineer do hereby declare the nature of this invention to be as follows:

This invention relates to breech-loading guns in which the breech is closed by a block entering the breech opening and having spaced screw-threads upon it engaging with corresponding spaced screw-threads within the breech of the gun. In such guns I give all the necessary movements to the breech-block by means of a lever handle and axis rotating through the arc of a circle. The same movement also actuates an extractor and gives the necessary movement to it for withdrawing the cartridge case from the chamber of the gun.

The mechanism as I prefer to construct it is as follows—

Upon the breech end of the gun a flanged ring or cap is fixed, and this has upon it bearings in which a vertical axis, formed with or fixed to the lever handle, is able to turn. This axis is on one side of and a short distance in rear of the breech opening. An arm at the upper end of this axis carries a stud or roller to engage with a notch in a sliding bar which is carried in guides and moves transversely to the bore of the gun. The same bar has another notch in it and this engages with a stud or roller upon the breech block. These parts are so arranged that in the movement of the lever handle to open the breech, the bar, during the first part of the movement, slides in its guides, and in doing so turns the breech block through an angle of about 60 degrees or sufficiently far to disengage the screw-threads upon it from the corresponding screw-threads within the gun. When this has taken place the stud or roller, which is carried with the lever handle, escapes from its notch in the transverse horizontal bar and travels on, whilst the bar remains without further movement.

429 Upon the rear end of the breech block there is a collar in which it is able to turn freely, and this collar has a stud upon it projecting downwards through a longitudinal slot in a tray or support provided to receive the breech block when withdrawn and into another slot formed in an arm by which the withdrawal of the breech block from the gun and its replacement after loading are effected. This arm I shall call the withdrawing arm. The withdrawing arm and also the tray are mounted upon the axis of the lever handle, but they are not fast thereon, and both these parts remain stationary during that portion of the movement of the handle which causes the engagement and disengagement of the screw-threads, as already described.

In opening the breech, as soon as the lever handle is moved sufficiently far to disengage the screw-threads, a shoulder upon or moving with the lever handle comes against another shoulder upon the withdrawing arm and this then commences to turn with the hand lever moving rearwards from the breech of the gun. In this movement it draws back the breech block out of the gun, the breech block being engaged with the disengaging arm in the manner already described. In this way the breech block is landed upon the tray or support and as soon as this is the case, the tray or support also commences to move round with the lever handle carrying the breech block to the rear and at the same time conveying it to one side so as to leave the breech opening unobstructed. In closing the breech the same movements take place in reversed order. First all the parts move together whilst the breech block is brought back into position to enter the breech opening, then the tray or support remains stationary whilst the breech block is thrust from off it by the withdrawing arm and finally this arm remains at rest during the last part of the movement of the lever handle, whilst the rotary movement is imparted to the breech block requisite to cause the engagement of the screw threads.

In order to ensure this sequence of movements a bolt or filling piece is provided on the withdrawing arm and a piece fast with the axis of the lever handle gives motion to the bolt. It has a stud upon it and this in opening the breech whilst the unlocking movement is in progress enters an inclined groove in the bolt. The bolt is thus moved along the arm inwards towards the axis whilst the shoulder on the axis of the lever handle is moving towards the corresponding shoulder on the withdrawing arm. The bolt is thus drawn inwards behind the first-mentioned shoulder, and by the time that this comes in contact with the shoulder upon the withdrawing arm the space behind it becomes occupied by the bolt and then for the time the withdrawing arm is fast locked on the axis of the lever handle. The bolt or filling piece is not withdrawn until in closing the breech the breech block has been again inserted into the breech opening.

The extractor, which is provided to withdraw the cartridge case from the chamber of the gun after firing, slides in a longitudinal groove provided for it on one side of the breech opening. It has a lip which, when the cartridge is in place in the gun, overlaps the flange at the base of the cartridge. It has also part of a screw-thread formed upon it at the side. When the breech block is turned to open the breech the thread upon the breech block engages with the thread upon the extractor and the screw then operates powerfully upon the extractor to withdraw it a short distance and loosen the cartridge case in the bore. When the breech block being unlocked is drawn rearwards, in the way already described (the screw-thread upon it being still engaged with that upon the extractor) the extractor also is drawn back carrying the cartridge case with it. As soon as the breech block has been landed upon its cradle or support and this commences to move around the centre, the screw-thread upon the breech block leaves the screw-thread on the extractor, and

428 Date of application, 17th May, 1887; complete left, 16th Feb., 1888; complete accepted, 16th Mar., 1888.

A. D. 1887, 17th May. No. 7195.

Provisional Specification.

Improvements in breech mechanism for ordnance.

I Thorsten Nordenfelt of 53 Parliament street in the city of Westminster civil engineer do hereby declare the nature of this invention to be as follows:

This invention relates to breech-loading guns in which the breech is closed by a block entering the breech opening and having spaced screw-threads upon it engaging with corresponding spaced screw-threads within the breech of the gun. In such guns I give all the necessary movements to the breech block by means of a lever handle and axis rotating through the arc of a circle. The same movement also actuates an extractor and gives the necessary movement to it for withdrawing the cartridge case from the chamber of the gun.

The mechanism as I prefer to construct it is as follows—

Upon the breech end of the gun a flanged ring or cap is fixed, and this has upon it bearings in which a vertical axis, formed with or fixed to the lever handle, is able to turn. This axis is on one side of and a short distance in rear of the breech opening. An arm at the upper end of this axis carries a stud or roller to engage with a notch in a sliding bar which is carried in guides and moves transversely to the bore of the gun. The same bar has another notch in it and this engages with a stud or roller upon the breech block. These parts are so arranged that in the movement of the lever handle to open the breech, the bar, during the first part of the movement, slides in its guides, and in doing so turns the breech block through an angle of about 60 degrees or sufficiently far to disengage the screw-threads upon it from the corresponding screw-threads within the gun. When this has taken place the stud or roller, which is carried with the lever handle, escapes from its notch in the transverse horizontal bar and travels on, whilst the bar remains without further movement.

429 Upon the rear end of the breech block there is a collar in which it is able to turn freely, and this collar has a stud upon it projecting downwards through a longitudinal slot in a tray or support provided to receive the breech block when withdrawn and into another slot formed in an arm by which the withdrawal of the breech block from the gun and its replacement after loading are effected. This arm I shall call the withdrawing arm. The withdrawing arm and also the tray are mounted upon the axis of the lever handle, but they are not fast thereon, and both these parts remain stationary during that portion of the movement of the handle which causes the engagement and disengagement of the screw-threads, as already described.

In opening the breech, as soon as the lever handle is moved sufficiently far to disengage the screw-threads, a shoulder upon or moving with the lever handle comes against another shoulder upon the withdrawing arm and this then commences to turn with the hand lever moving rearwards from the breech of the gun. In this movement it draws back the breech block out of the gun, the breech block being engaged with the disengaging arm in the manner already described. In this way the breech block is landed upon the tray or support and as soon as this is the case, the tray or support also commences to move round with the lever handle carrying the breech block to the rear and at the same time conveying it to one side so as to leave the breech opening unobstructed. In closing the breech the same movements take place in reversed order. First all the parts move together whilst the breech block is brought back into position to enter the breech opening, then the tray or support remains stationary whilst the breech block is thrust from off it by the withdrawing arm and finally this arm remains at rest during the last part of the movement of the lever handle, whilst the rotary movement is imparted to the breech block requisite to cause the engagement of the screw threads.

In order to ensure this sequence of movements a bolt or filling piece is provided on the withdrawing arm and a piece fast with the axis of the lever handle gives motion to the bolt. It has a stud upon it and this in opening the breech whilst the unlocking movement is in progress enters an inclined groove in the bolt. The bolt is thus moved along the arm inwards towards the axis whilst the shoulder on the axis of the lever handle is moving towards the corresponding shoulder on the withdrawing arm. The bolt is thus drawn inwards behind the first-mentioned shoulder, and by the time that this comes in contact with the shoulder upon the withdrawing arm the space behind it becomes occupied by the bolt and then for the time the withdrawing arm is fast locked on the axis of the lever handle. The bolt or filling piece is not withdrawn until in closing the breech the breech block has been again inserted into the breech opening.

The extractor, which is provided to withdraw the cartridge case from the chamber of the gun after firing, slides in a longitudinal groove provided for it on one side of the breech opening. It has a lip which, when the cartridge is in place in the gun, overlaps the flange at the base of the cartridge. It has also part of a screw-thread formed upon it at the side. When the breech block is turned to open the breech the thread upon the breech block engages with the thread upon the extractor and the screw then operates powerfully upon the extractor to withdraw it a short distance and loosen the cartridge case in the bore. When the breech block being unlocked is drawn rearwards, in the way already described (the screw-thread upon it being still engaged with that upon the extractor) the extractor also is drawn back carrying the cartridge case with it. As soon as the breech block has been landed upon its cradle or support and this commences to move around the centre, the screw-thread upon the breech block leaves the screw-thread on the extractor, and

the extractor remains at rest at the rear end of its guide-groove. The extractor also is then locked by a sliding bolt which enters a recess in the side of the extractor and holds it in place—this bolt is carried in guides upon the cap on the breech of the gun and it receives its movement from a lug which is fast with the axis of the lever handle.

The face of the breech block is cupped to a form corresponding to that of the base of the cartridge that is to say somewhat inclined at the sides and in loading this cavity effects the centering of the cartridge and ensures it entering truly into the gun although there may be but little clearance between the flange of the cartridge and the screw-threads in the breech of the gun over which the flange has to pass.

431 The way the parts operate is as follows:—In loading the cartridge is first inserted into the bore as far as the extractor will permit it to enter, then the breech block swings round and the cavity in its face applies itself over the base of the cartridge whilst it is stopped by the extractor from moving forward. The base of the cartridge is thus compelled to enter to the bottom of the cavity of the breech block.

In the further movement of the parts the extractor becomes locked with the breech block and these parts between them then carry the cartridge forward into the gun with the cartridge securely held and truly centered between them.

My invention it will be seen is well suited to be applied to existing guns in which the breech is closed by a breech block locked in place by means of divided screw-threads.

Dated this 17th day of May, 1887.

CARPMAEL & CO.,
Agents for the Applicants.

A.D. 1887. May 17. No 7195.
NORDENFELT'S Complete Specification.

4 Sheets – Sheet 1.

Fig. 1.

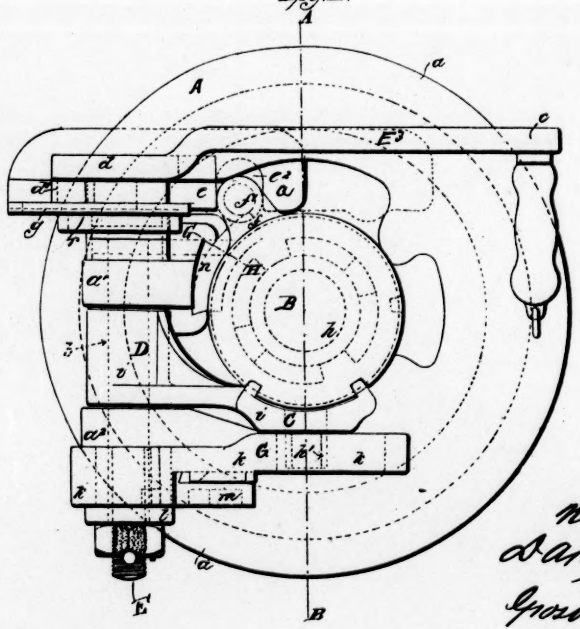

1

No. 569.
Dashiell
v.
Grosvenor
p. 432a

A.D. 1867. May 17. N° 1185.
NORDENFELT'S Complete Specification.

4 Sheets - Sheet 2.

Fig. 2.

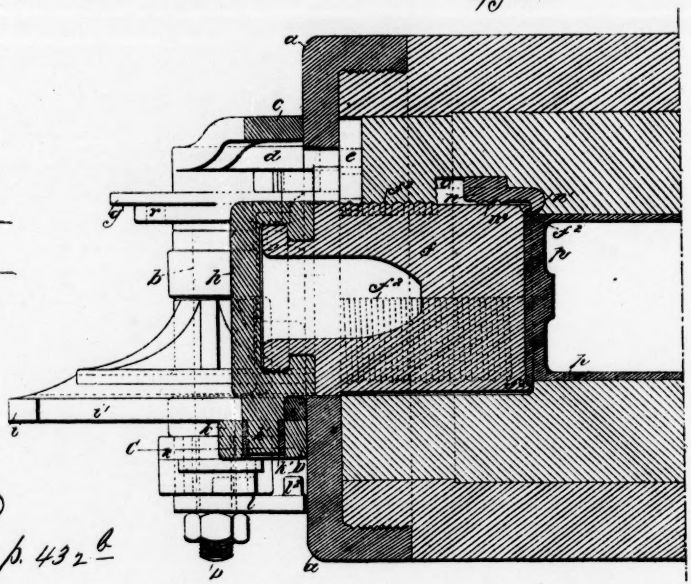

2

no. 569.
Dashwood
v.
Grosvenor.
} p. 432 b

A.D. 1867. May 17. No 7195.
NORDENFELT'S Complete Specification.

4 Sheets – Sheet 3.

Fig. 4.

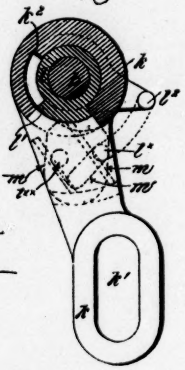

3

Fig. 3.

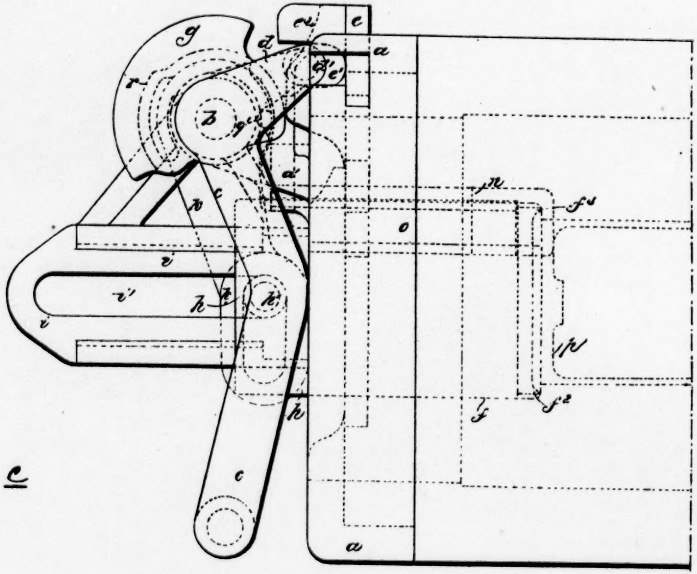

No. 569.
Dashwell
v.
Grosvenor.
p. 432 c

A.D. 1887. May 17. N° 7156.
NORDENFELT'S Complete Specification.

4 Sheets · Sheet 4.

Fig. 5.

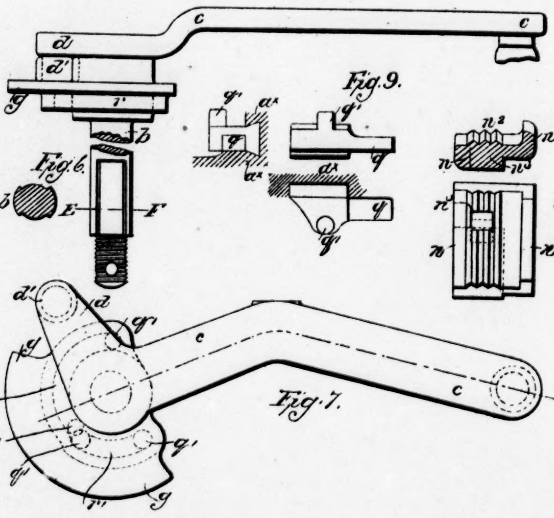

Fig. 7.

4

No. 569.
Nashill
v.
Grosvenor
} p. 432 d

Date of application, 17th May, 1887; complete left, 16th Feb., 1888; complete accepted, 16th Mar., 1888.

A. D. 1887, 17th May. No. 7195.

Complete Specification.

Improvements in breech mechanism for ordnance.

I, Thorsten Nordenfelt of 53 Parliament street, in the city of Westminster, civil engineer, do hereby declare the nature of this invention and in what manner the same is to be performed to be particularly described and ascertained in and by the following statement:—

This invention relates to breech-loading guns in which the breech is closed by a block entering the breech opening and having spaced screw-threads upon it engaging with corresponding spaced screw-threads within the breech of the gun. In such guns I give all the necessary movements to the breech block by means of a lever handle and axis rotating through the arc of a circle. The same movement also actuates an extractor and gives the necessary movement to it for withdrawing the cartridge case from the chamber of the gun.

432 The mechanism as I prefer to construct it is represented by the annexed drawings.

(Here follow diagrams marked pp. 432*a*, 432*b*, 432*c*, & 432*d*)

Figure 1 is a rear elevation.

Figure 2 is a longitudinal section mainly on the line A B in figure 1 but in part (around the extractor *n*) on the line G H in the same figure.

Figure 3 is a plan.

Figure 4 is a section on the line C D in figure 2.

Figure 5 is an elevation of the lever handle, its axis and other parts. (A portion of the axis is broken out.)

Figure 6 is a section on the line E F in figure 5.

Figure 7 is a plan of the lever handle and parts connected with it.

Figure 8 shows the extractor.

Figure 9 shows the bolt which serves to retain the extractor when the breech is open.

Upon the breech end of the gun a flanged ring or cap *a* is fixed, and this has upon it bearings a^1 a^2 in which a vertical axis *b* formed with or fixed to the lever handle *c* is able to turn. This axis is on one side of and a short distance in rear of the breech opening. An arm *d* at the upper end of this axis carries a stud or roller d^1 to engage with a notch e^1 in a sliding bar *e* which is carried in guides and moves transversely to the bore of the gun. The same bar has another notch e^2 in it and this engages with a stud or roller f^1 upon the breech block *f*. These parts are so arranged that in the move-

ment of the lever handle c to open the breech the bar e during the first part of the movement slides in its guides and in doing so turns the breech block through an angle of about 60 degrees or sufficiently far to disengage the screw-threads f^2 upon it from the corresponding screw-threads within the gun. When this has taken place the stud or roller d^1 which is carried with the lever handle escapes from its notch in the transverse horizontal bar e and travels on whilst the bar remains without further movement.

The bar e is now held in position at the end of its course by an arc g on the axis b which then comes in behind the curved end of the bar e^3.

Upon the rear end of the breech block f there is a collar h in which it is able to turn freely and this collar has a stud h^1 upon it projecting downwards through a longitudinal slot i^1 in a tray
433 or support i provided to receive the breech block when withdrawn and into another slot k^4 formed in an arm k by which the withdrawal of the breech block from the gun and its replacement after loading are effected. This arm I shall call the withdrawing arm. The withdrawing arm k and also the tray i are mounted upon the axis b of the lever handle, but they are not fast thereon, and both these parts remain stationary during that portion of the movement of the handle which causes the engagement and disengagement of the screw-threads, as already described.

In opening the breech as soon as the lever handle c is moved sufficiently far to disengage the screw-threads f^2 a shoulder l^1 upon a piece l moving with the lever handle comes against another shoulder k^2 upon the withdrawing arm and this then commences to turn with the hand lever moving rearwards from the breech of the gun. In this movement it draws back the breech block f out of the gun the breech block being engaged with the disengaging arm in the manner already described. In this way the breech block is landed upon the tray or support i and as soon as this is the case the tray or support also commences to move round with the lever handle carrying the breech block to the rear and at the same time conveying it to one side so as to leave the breech opening unobstructed. In closing the breech the same movements take place in reversed order. First all the parts move together whilst the breech block is brought back into position to enter the breech opening, then the tray or support i remains stationary whilst the breech block f is thrust from off it by the withdrawing arm k and finally this arm remains at rest during the last part of the movement of the lever handle, whilst the rotary movement is imparted to the breech block requisite to cause the engagement of the screw-threads.

In order to ensure this sequence of movements a bolt or filling piece m is provided on the withdrawing arm and a piece l fast with the axis b of the lever handle gives motion to the bolt. It has a stud l^2 upon it and this in opening the breech whilst the unlocking movement is in progress enters an inclined groove m^1 in the bolt. The bolt is thus whilst the stud l^2 passes from l^x to l^{xx} moved along the arm k inwards towards the axis whilst the shoulder l^1 on the axis of the lever handle is moving towards the corresponding shoul-

der k^2 on the withdrawing arm. The bolt is thus drawn
434 inwards behind the first-mentioned shoulder, and by the time this comes in contact with the shoulder upon the withdrawing arm the space behind it becomes occupied by the bolt m and then for the time the withdrawing arm is fast locked on the axis of the lever handle. The bolt or filling piece m is not withdrawn until in closing the breech the breech block has been again inserted into the breech opening.

The extractor n which is provided to withdraw the cartridge case from the chamber of the gun after firing, slides in a longitudinal groove o provided for it on one side of the breech opening. It has a lip n^1 which when the cartridge p is in place in the gun, overlaps the flanges at the base of the cartridge. It has also part of a screw-thread n^2 formed upon it at the side. When the breech block f is turned to open the breech the thread f^2 upon the breech block engages with the thread n^2 upon the extractor, and the screw then operates powerfully upon the extractor to withdraw it a short distance and loosen the cartridge case in the bore. When the breech block being unlocked is drawn rearwards, in the way already described (the screw-thread f^2 upon it being still engaged with that upon the extractor) the extractor also is drawn back carrying the cartridge case with it. As soon as the breech block has been landed upon its cradle or support i and this commences to move around the centre b the screw-thread f^1 upon the breech block leaves the screw-thread n^2 on the extractor, and the extractor remains at rest at the rear end of its guide-groove o. The extractor also is then locked by a sliding bolt q which enters a recess n^3 in the side of the extractor and holds it in place—this bolt is carried in guides a^x a^x upon the cap a on the breech of the gun and it receives its movement from a cam r which is fast with the axis of the lever handle.

q^1 is a stud on the bolt q (see Figs. 9) which remains constantly engaged in the cam groove r^1 and this groove is so formed as to shoot the bolt forward into the recess n^3 and to withdraw it at the proper times.

The face f^3 f^3 of the breech block is cupped to a form corresponding to that of the base of the cartridge p that is to say somewhat inclined at the sides and in loading this cavity f^3 effects the entering of the cartridge and ensures it entering truly into the gun although there may be but little clearance between the flange of the
435 cartridge and the screw-threads in the breech of the gun over which the flange has to pass.

The way the parts operate is as follows:—In loading the cartridge p is first inserted into the bore as far as the extractor n will permit it to enter, then the breech block f swings round and the cavity f^3 in its face applies itself over the base of the cartridge p whilst it is stopped by the extractor n from moving forward. The base of the cartridge is thus compelled to enter to the bottom of the cavity f^3 of the breech block.

In the further movement of the parts the extractor n becomes locked with the breech block f and these parts between them then

carry the cartridge forward into the gun with the cartridge securely held and truly centred between them.

My invention it will be seen is well suited to be applied to existing guns in which the breech is closed by a breech block locked in place by means of divided screw-threads.

The parts f and h fit together with a bayonet joint; there are lugs on the part f which enter through corresponding notches in the part h. The lugs and notches extend over arcs of 90 degrees and as the rotary movement of the breech block f is but 60 degrees the parts remain engaged when at work.

Having now particularly described and ascertained the nature of my said invention and in what manner the same is to be performed I declare that what I claim is—

1. Breech mechanism in which an axis b by means of an arm d turns the breech block f and locks and unlocks it and by means of another arm k withdraws and replaces the breech block; the said arm k being so connected with the axis b as to move with it only over a portion of the arc over which the rotation of the axis entends.

2. The combination of the parts a b c d e f h i and k substantially as described.

3. The combination of the axis b; the part l with its shoulder l^1; the withdrawing arm k; and the filling piece m operating substantially as described.

4. The extractor n with its screw-threads n^2 engaging with the screw-threads f^2 on the breech block and disengaging therefrom substantially as described.

5. The combination of the extractor n the bolt q and a
436 cam or its equivalent on the axis b operating the bolt substantially as described.

6. The combination of the block f with its cup-like face f^3 and the extractor n^1 in such manner that when loading the parts f and n^1 lock together and hold the base of the cartridge centrally between them and then advance with it into the gun substantially as described.

7. Breech-loading mechanism substantially as described and represented by the annexed drawings.

Dated this 16th day of February 1888.

THORSTEN NORDENFELT.

(Endorsed:) 3301. D, 93.

437 (6.)

R. B. D. No. 6. Wm. Herbert Smith, U. S. Commissioner. F'd May 30, '94.

U. S. Circuit Court, District of Maryland. In Equity.

GROSVENOR *et al.*
v.
DASHIELL.

(2–175*a*.)

DEPARTMENT OF THE INTERIOR,

(Vignette.)

UNITED STATES PATENT OFFICE.

To all persons to whom these presents shall come, Greeting:

This is to certify that the annexed is a true copy from the bound volumes of the library of this office of the provisional and complete specifications in the matter of the English letters patent of Jean Baptiste Gustave Adolphe Canet, # 7435—date claimed for patent under sect. 103 of act, being date of first foreign application (in France), 28th March, 1888; date of application (in United Kingdom), 19th May, 1888; complete specification left, 24th December, 1888; complete specification accepted, 12th February, 1889 (under international convention)—for improvements in ordnance.

In testimony whereof I, W. E. Simonds, Commissioner of Patents, have caused the seal of the Patent Office to be affixed this 23d day of February, in the year of our Lord one thousand eight hundred and ninety-three, and of the Independence of the United States the one hundred and seventeenth.

Seal Patent Office, United States of America.

W. E. SIMONDS,
Commissioner.

438 Date claimed for patent under sect. 103 of act, being date of first foreign application (in France), 28th Mar., 1888.

Date of application (in United Kingdom), 19th May, 1888; complete specification left, 24th Dec., 1888; complete specification accepted, 12th Feb., 1889.

A. D. 1888. No. 7435.

(Under international convention.)

Provisional Specification.

Improvements in ordnance.

I Jean Baptiste Gustave Adolphe Canet, of 91 — Malakoff, Paris France, civil engineer, do hereby declare the nature of this invention to be as follows:—

This invention relates to improvements on my patent No. 9813 dated 12th July 1887, and consists in a new arrangement of breech mechanism and of the breech screw.

My invention is illustrated in the accompanying drawings.

(Here follow diagrams marked pp. 438*a* & 438*b*.)

The breech screw A is provided at its rear end with a toothed sector B, which gears with a rack C. This rack is shaped out of a bearing E in which turns a nut cast in one with the pinion H; this nut works on a screw D supported in bearings M and N secured to the breech end of the gun.

The teeth of the pinion H are helicoidal, and are cut so as to gear with the threads of the breech screw itself, and not with a special rack as in the arrangement described and shown in my prior patent above referred to.

A worm wheel G mounted on the axis of the screw D, receives a rotary motion from the endless screw F, which is actuated by a crank handle when the mechanism is to be worked by hand. This endless screw and the worm wheel will not be required when hydraulic power is employed. When the crank handle is actuated the motion transmitted to the worm wheel G will cause the screw D to revolve. The bearing E being maintained in position by a guide-piece I moving in a groove in the bracket, and the pinion H similarly held by lateral guides which embrace two of its
439 teeth, cannot turn and consequently the nut and pinion piece rises, and the rack acting upon the toothed sector causes the breech screw to turn.

When the rotary movement has been sufficient to completely disengage the breech screw the bearing E will abut against the support of the screw D. At this position the guides which held the teeth of the opinion are cut away, and under the action of the screw D, the rotation of which continues, the nut turns, and with it the pinion H, which has then engaged the threads of the breech screw, and causes it to come out.

A.D. 1888. March 28. No. 7646.
(Under Sectorcutting Clauses)
CANET'S PROVISIONAL SPECIFICATION.

2 Sheets—Sheet 1.

No. 569.
Dashwell
v.
Grosvenor
} p. 438 a

Fig. 1.

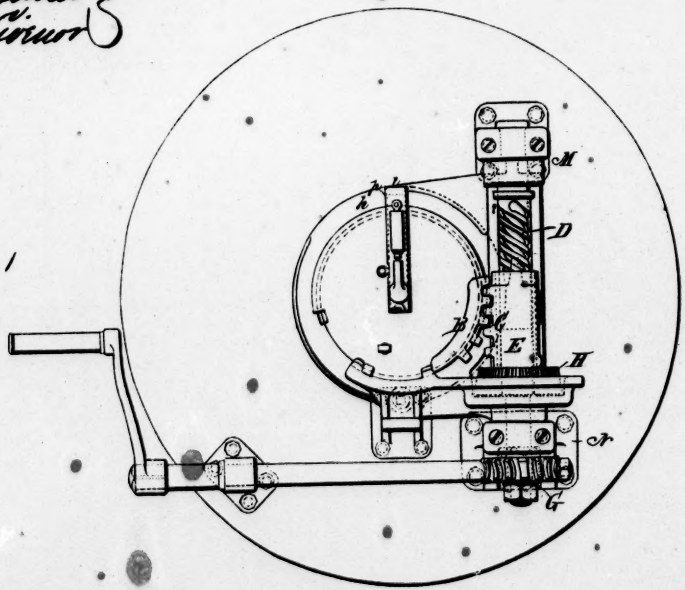

Fig. 4.

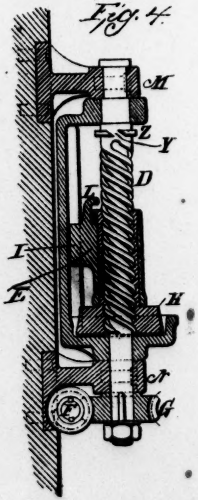

21

A.D. 1888. March 28. N° 7435
(Under International Convention)
CANEL'S PROVISIONAL SPECIFICATION

No. 569.
Bakhuis
v.
Governor.
No. 4385

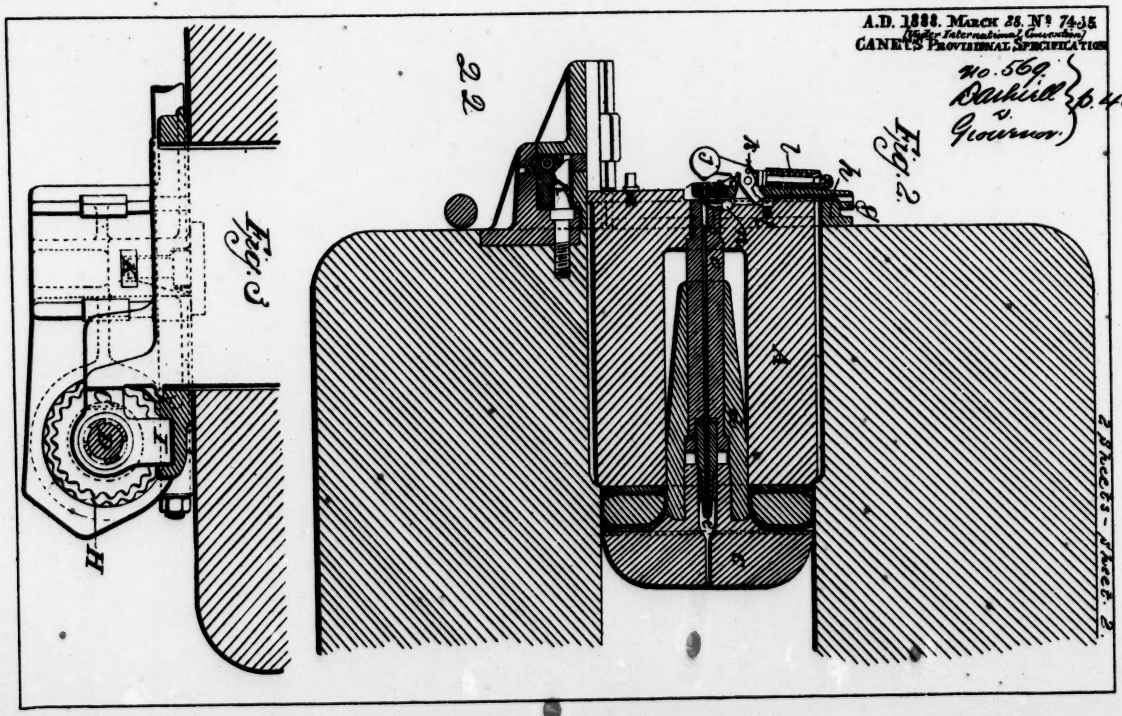

2 Sheets-Sheet 2.

At the end of the period of rotation a hook L passes through the slot Y in the collar Z, and supports the bearing until it again arrives opposite the slot, the return movement of the breech-screw having been effected.

When the breech has arrived at the end of its course, a bolt K, similar to that described in my prior patent above referred to, locks the screw to the screw-carrier, but this bolt is arranged beneath the carrier instead of at the side thereof, as hitherto.

From this moment the pinion H forming so to speak one with the carrier, the whole system under the action of the endless screw turns round the axis of the screw D and the breech screw is turned to the side.

The operations are reversed to effect the closing of the breech.

I further make two important improvements relating to the breech screw and to the firing mechanism, whereby I modify the arrangements shown in the drawings of my previous patent above referred to, in the following manner :—

The axial stem *a* of the mushroom head is fixed, instead of being movable as hitherto ; it is screwed at *b* into the breech screw.

The mushroom head is formed in two parts, the mushroom *c*, and the spindle *d*, which are screwed together.

The hollow spindle *d* is slipped over the axial stem *a*, and it can slide on it when the pressure of gas on firing the charge drives back the mushroom head.

On the end of the axial stem is mounted a sort of nozzle piece on which is screwed a short metallic tube *f*, the end of which is cut slanting, forming an obturating cup when under the pressure of the gas, ensuring a perfectly tight joint between the mushroom head and the axial stem.

The axial stem being fixed I make the firing slide in one piece, and effect the following improvements in the firing gear.

The firing slide has a tail piece *g* which rests against the outer edge of the circular frame *h*.

The shape of this frame is such that the percussion lock cannot pass into the position necessary for firing except when the breech being entirely closed, the tail of the lock has arrived opposite a notch *i* which permits the whole of the lock to descend.

The cocking and the extracting actions are effected automatically.

In carrying out this improvement I employ the following arrangement :—

The hammer *j* is provided with a roller *k* against which bears the end of a rod acted upon by a spiral spring *l*, and the hammer is formed with a tail piece *m*.

Besides at the point *n* on the breech screw is fixed a horizontal axis, on which a small two-armed lever *o* can turn. The main arm constitutes the extractor.

When, after firing, the breech mechanism is actuated, the tail piece *g* travels up the inclined plane *p* carrying the pin with it.

The tail piece *m* of the hammer then abuts against a stop *q* fixed

to the breech and this movement has the effect of cocking the hammer. At the same time a tappet *r* fixed to the lock is brought to bear against the tail of the extractor. The latter turns sharply and causes the primer tube to be expelled.

It will be understood that the materials, proportions, and dimensions, as well as the accessory arrangements may be varied without departing from the principle of my invention.

Dated this 18th day of May, 1888.

JEAN BAPTISTE GUSTAVE ADOLPHE CANET.

441 Date claimed for patent under sect. 103 of act, being date of first foreign application (in France), 28th Mar., 1888.

Date of application (in United Kingdom), 19th May, 1888; complete specification left, 24th Dec., 1888; complete specification accepted, 12th Feb., 1889.

A. D. 1888. No. 7435.

(Under international convention.)

Complete Specification.

Improvements in ordinance.

I, Jean Baptiste Gustave Adolphe Canet, of 91 Avenue Malakoff, Paris, France, civil engineer, do hereby declare the nature of this invention and in what manner the same is to be performed, to be particularly described and ascertained in and by the following statement:—

This invention relates to improvements on my patent No. 9813 dated 12th July, 1887, and consists in a new arrangement of breech mechanism and of the breech screw.

My invention is illustrated in the drawings accompanying my provisional specification.

The breech screw A is provided at its rear end with a toothed sector B, which gears with a rack C. This rack is shaped out of a bearing E in which turns a nut cast in one with the pinion H; this nut works on a screw D, supported in bearings M and N secured to the breech end of the gun.

The teeth of the pinion H are helicoidal and are cut so as to gear with the threads of the breech screw itself, and not with a special rack as in the arrangement described and shown in my prior patent above referred to.

A worm wheel G mounted on the axis of the screw D, receives a rotary motion from the endless screw F, which is actuated by a crank handle when the mechanism is to be worked by hand. This endless screw and the worm wheel will not be required when hydraulic power is employed. When the crank handle is actuated the motion transmitted to the worm wheel G will cause the screw D to revolve. The bearing E being maintained in position
442 by a guide-piece I moving in a groove in the bracket, and the pinion H similarly held by lateral guides which embrace

two of its teeth, cannot turn and consequently the nut and pinion piece rises, and the rack acting upon the toothed sector causes the breech screw to turn.

When the rotary movement has been sufficient to completely disengage the breech screw the bearing E will abut against the support of the screw D. At this position the guides which held the teeth of the pinion are cut away and under the action of the screw D, the rotation of which continues, the nut turns, and with it the pinion H, which has then engaged the threads of the breech screw, and causes it to come out.

At the end of the period of rotation a hook L passes through the slot Y in the collar Z, and supports the bearing until it again arrives opposite the slot, the return movement of the breech screw having been effected.

When the breech has arrived at the end of its course, a bolt K, similar to that described in my prior patent above referred to, locks the screw to the screw-carrier, but this bolt is arranged beneath the carrier instead of at the side thereof, as hitherto.

From this moment the pinion H forming so to speak one with the carrier, the whole system under the action of the endless screw turns round the axis of the screw D, and the breech screw is turned to the side.

The operations are reversed to effect the closing of the breech.

I further make two important improvements relating to the breech screw and to the firing mechanism, whereby I modify the arrangements shown in the drawings of my previous patent above referred to, in the following manner:—

The axial stem *a* of the mushroom head is fixed, instead of being movable as hitherto; it is screwed at *b* into the breech screw.

The mushroom head is formed in two parts, the mushroom *c*, and the spindle *d*, which are screwed together.

The hollow spindle *d* is slipped over the axial stem *a*, and it can slide on it when the pressure of gas on firing the charge drives back the mushroom head.

On the end of the axial stem is mounted a sort of nozzle piece on which is screwed a short metallic tube *f*, the end of which is
443 cut slanting, forming an obturating cup when under the pressure of the gas, ensuring a perfectly tight joint between the mushroom head and the axial stem.

The axial stem being fixed I make the firing slide in one piece, and effect the following improvements in the firing gear.

The firing slide has a tail piece *g* which rests against the outer edge of the circular frame *h*.

The shape of this frame is such that the percussion lock cannot pass into the position necessary for firing except when the breech being entirely closed, the tail of the lock has arrived opposite a notch *i* which permits the whole of the lock to descend.

The cocking and the extracting actions are effected automatically.

In carrying out this improvement I employ the following arrangement:

to the breech and this movement has the effect of cocking the hammer. At the same time a tappet *r* fixed to the lock is brought to bear against the tail of the extractor. The latter turns sharply and causes the primer tube to be expelled.

It will be understood that the materials, proportions, and dimensions, as well as the accessory arrangements may be varied without departing from the principle of my invention.

Dated this 18th day of May, 1888.

JEAN BAPTISTE GUSTAVE ADOLPHE CANET.

441 Date claimed for patent under sect. 103 of act, being date of first foreign application (in France), 28th Mar., 1888.

Date of application (in United Kingdom), 19th May, 1888; complete specification left, 24th Dec., 1888; complete specification accepted, 12th Feb., 1889.

A. D. 1888. No. 7435.

(Under international convention.)

Complete Specification.

Improvements in ordinance.

I, Jean Baptiste Gustave Adolphe Canet, of 91 Avenue Malakoff, Paris, France, civil engineer, do hereby declare the nature of this invention and in what manner the same is to be performed, to be particularly described and ascertained in and by the following statement:—

This invention relates to improvements on my patent No. 9813 dated 12th July, 1887, and consists in a new arrangement of breech mechanism and of the breech screw.

My invention is illustrated in the drawings accompanying my provisional specification.

The breech screw A is provided at its rear end with a toothed sector B, which gears with a rack C. This rack is shaped out of a bearing E in which turns a nut cast in one with the pinion H; this nut works on a screw D, supported in bearings M and N secured to the breech end of the gun.

The teeth of the pinion H are helicoidal and are cut so as to gear with the threads of the breech screw itself, and not with a special rack as in the arrangement described and shown in my prior patent above referred to.

A worm wheel G mounted on the axis of the screw D, receives a rotary motion from the endless screw F, which is actuated by a crank handle when the mechanism is to be worked by hand. This endless screw and the worm wheel will not be required when hydraulic power is employed. When the crank handle is actuated the motion transmitted to the worm wheel G will cause the screw D to revolve. The bearing E being maintained in position
442 by a guide-piece I moving in a groove in the bracket, and the pinion H similarly held by lateral guides which embrace

two of its teeth, cannot turn and consequently the nut and pinion piece rises, and the rack acting upon the toothed sector causes the breech screw to turn.

When the rotary movement has been sufficient to completely disengage the breech screw the bearing E will abut against the support of the screw D. At this position the guides which held the teeth of the pinion are cut away and under the action of the screw D, the rotation of which continues, the nut turns, and with it the pinion H, which has then engaged the threads of the breech screw, and causes it to come out.

At the end of the period of rotation a hook L passes through the slot Y in the collar Z, and supports the bearing until it again arrives opposite the slot, the return movement of the breech screw having been effected.

When the breech has arrived at the end of its course, a bolt K, similar to that described in my prior patent above referred to, locks the screw to the screw-carrier, but this bolt is arranged beneath the carrier instead of at the side thereof, as hitherto.

From this moment the pinion H forming so to speak one with the carrier, the whole system under the action of the endless screw turns round the axis of the screw D, and the breech screw is turned to the side.

The operations are reversed to effect the closing of the breech.

I further make two important improvements relating to the breech screw and to the firing mechanism, whereby I modify the arrangements shown in the drawings of my previous patent above referred to, in the following manner:—

The axial stem *a* of the mushroom head is fixed, instead of being movable as hitherto; it is screwed at *b* into the breech screw.

The mushroom head is formed in two parts, the mushroom *c*, and the spindle *d*, which are screwed together.

The hollow spindle *d* is slipped over the axial stem *a*, and it can slide on it when the pressure of gas on firing the charge drives back the mushroom head.

On the end of the axial stem is mounted a sort of nozzle piece on which is screwed a short metallic tube *f*, the end of which is
443 cut slanting, forming an obturating cup when under the pressure of the gas, ensuring a perfectly tight joint between the mushroom head and the axial stem.

The axial stem being fixed I make the firing slide in one piece, and effect the following improvements in the firing gear.

The firing slide has a tail piece *g* which rests against the outer edge of the circular frame *h*.

The shape of this frame is such that the percussion lock cannot pass into the position necessary for firing except when the breech being entirely closed, the tail of the lock has arrived opposite a notch *i* which permits the whole of the lock to descend.

The cocking and the extracting actions are effected automatically.

In carrying out this improvement I employ the following arrangement:

The hammer *j* is provided with a roller *k* against which bears the end of a rod acted upon by a spiral spring *l*; and the hammer is formed with a tail piece *m*.

Besides at the point *n* on the breech screw is fixed a horizontal axis, on which a small two-armed lever *o* can turn. The main arm constitutes the extractor.

When, after firing, the breech mechanism is actuated the tail piece *g* travels up the inclined plane *p* carrying the pin with it.

The tail piece *m* of the hammer then abuts against a stop *q* fixed to the breech, and this movement has the effect of cocking the hammer. At the same time a tappet *r* fixed to the lock is brought to bear against the tail of the extractor. The latter turns sharply and causes the primer tube to be expelled.

It will be understood that the materials, proportions, and dimensions, as well as the accessory arrangements may be varied without departing from the principle of my invention.

Having now particularly described and ascertained the nature of my said invention, and in what manner the same is to be performed, I declare that what I claim is:

1. The improved construction whereby the opening of the breech of guns can be effected completely by a rotary movement always in the same direction, the rotation of the breech screw being effected by the action of a rack mounted upon an endless screw, upon
444 a toothed sector on the breech block; the longitudinal movement of the breech screw being effected by the direct action of a pinion upon the threads of the breech screw; and the pivotting of the bracket being effected by the direct action of the operating shaft upon the endless vertical screw.

2. The construction of breech screw with a fixed axial stem and movable mushroom head, the sealing of the axial vent being obtained by means of a short metallic tube.

3. The construction of the firing lock and the automatic cocking and extracting mechanism.

4. The construction and arrangement of the accessory parts, above described.

Dated this 21st day of December, 1888.

J. B. G. A. CANET.

(Endorsed:) 3301. D, 93.

445 (3.)

R. B. D. No. 7. Wm. Herbert Smith, U. S. Commissioner. Filed May 30, '94.

U. S. Circuit Court, District of Maryland. In Equity.

GROSVENOR *et al.*
vs.
DASHIELL.

(2–175*a*.)

DEPARTMENT OF THE INTERIOR,

(Vignette.)

UNITED STATES PATENT OFFICE.

To all persons to whom these presents shall come, Greeting:

This is to certify that the annexed is a true copy from the bound volumes of the library of this office of the provisional and complete specifications in the matter of the English letters patent of Albert Sauvée, #9813—date of application, July 12, 1887; complete left, March 26, 1888; complete accepted, May 4, 1888—for improvements in breech-loading ordnance.

In testimony whereof I, W. E. Simonds, Commissioner of Patents, have caused the seal of the Patent Office to be affixed this 23d day of February, in the year of our Lord one thousand eight hundred and ninety-three, and of the Independence of the United States the one-hundred and seventeenth.

Seal Patent Office, United States of America.

W. E. SIMONDS,
Commissioner.

446 Date of application, 12th July, 1887; complete left, 26th Mar., 1888; complete accepted, 4th May, 1888.

A. D. 1887, 12th July. No. 9813.

Provisional Specification.

Improvements in breech-loading ordnance.

I, Albert Sauvée, of 22 Parliament street, Westminster, in the county of Middlesex, civil engineer, do hereby declare the nature of this invention, which has been communicated to me from abroad by Jean Baptiste Gustave Adolphe Canet, civil engineer, of 91 Avenue Malakoff, Paris, France, to be as follows:—

This invention relates to the closing of the breech.

In the annexed drawings

(Here follow diagrams marked pp. 446*a* & 446*b*.)

Fig. 1 shows a longitudinal section of the breech.
Fig. 2 a back view of the mechanism.
Fig. 3 a horizontal section.
Fig. 4 a horizontal section
Fig. 5 details of the firing mechanism.
Fig. 6 a section of the endless screw E.
Fig. 7 a section through the axis of the worm wheel.
Figs. 8, 9 and 10 the hydraulic mechanism.

The breech is closed by the usual French screw A with interrupted threads which carries at the back a lug with a groove B in which slides a bearing carried by a stud C forming part of a ring D.

This ring is mounted on a collar E which forms a nut working on an endless screw X and which carries at its lower part a pinion F.

The pinion G mounted on the lower end of the endless screw receives its motion from the pinion H by means of an intermediate toothed wheel. The axis of the pinion H carries a worm wheel I gearing with an endless screw J put in motion by a hand crank or a hydraulic apparatus.

When the hand crank is turned, the motion transmitted to the pinion G causes the endless screw X to turn.

The collar D which cannot turn because one of the teeth of the wheel F is engaged in a groove *a* in the breech, rises and carries with it the bearing.

The breech screw then takes a rotary motion.

447 When the rotation is sufficient to disengage the screw A from the breech of the gun, the top part of the collar D bears at the top against the support of the endless screw and the pinion F arriving at a certain position where an interruption in the groove *a* releases it and allows it to turn, it follows the rotary motion of the endless screw; this pinion F then gears with a rack K arranged

A.D. 1887. July 12. N° 9613.
SAUVEE'S Provisional Specification.

(2 Sheets)
Sheet 1.

No. 569
Darkwell
v.
Grosvenor
p. 446 a

23

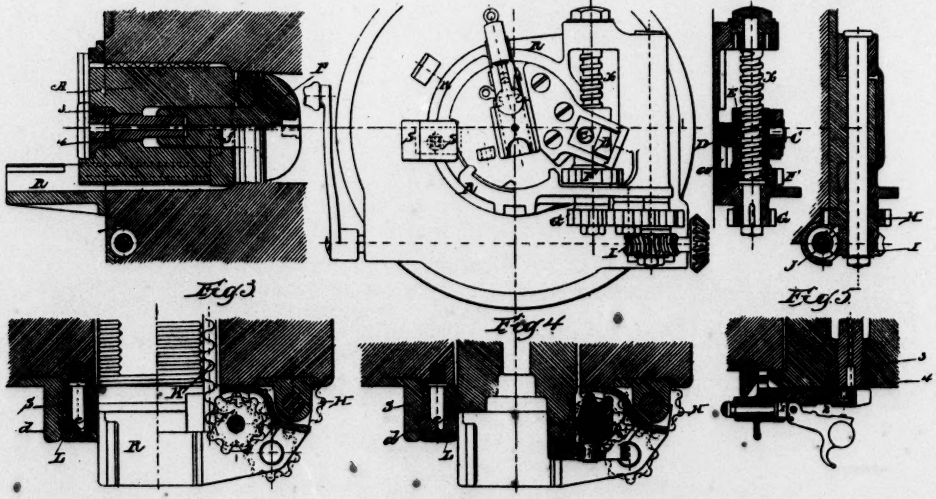

A.D. 1837. July 13. No. 3813.
SAUVEE'S Provisional Specification.

(2 Sheets)
Sheet 2.

No. 569
Dashwell
v.
Grosvenor
p. 446 b

24

Fig. 8.

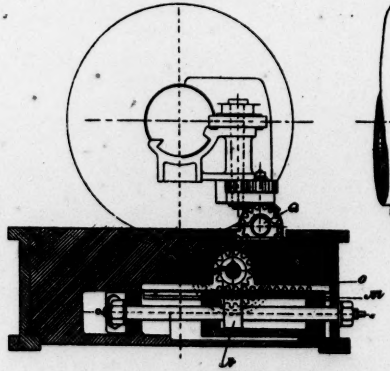

Fig. 9.

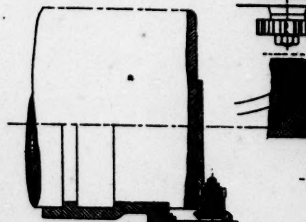

Fig. 10.

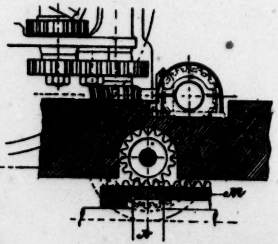

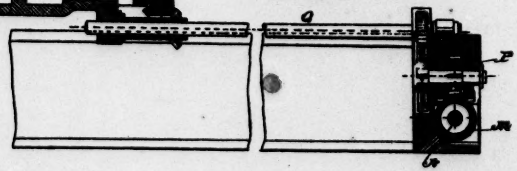

along one of the generating lines of the breech screw which it withdraws from the gun on the carrier R.

Up to this moment the carrier R is connected to the gun by the bolt L which slides in a groove of the carrier into a socket S fixed on the gun.

The bolt L remains in the socket during the whole of the time that the screw is disengaging itself from the breech of the gun and moves backward on the carrier.

At the moment that the pinion F arrives at the end of the rack, its motion is stopped and the pinion H acting on the intermediate toothed wheel has a tendency to turn the carrier. The bolt L is then withdrawn from its socket S sliding on the two inclined planes *d*, *e* and enters into a notch *f* made for this purpose in the breech screw; from this moment the carrier can turn freely and the breech screw be connected to the carrier by the bolt L turning round to disengage the breech and allow the loading of the gun.

The rotation of the breech screw, its extraction and the rotation of the carrier succeed one another whilst the hand crank is being turned in the same direction.

The closing of the breech is effected by working the handle in the opposite direction.

In order to work the breech hydraulically I arrange in the back girder or cross-beam of the slide on which the gun saddle recoils a movable press M with a fixed piston N having a double rod.

The movable cylinder carries a rack O gearing with a pinion P, which by means of a transmission shaft Q and toothed wheels act on the bevel wheel of the shaft on which is mounted the endless screw J.

This system is applicable to all breech screws worked by toothed wheels or an endless screw from a continuous movement as shown in Figs. 8, 9 and 10.

The usual percussion firing mechanism is divided into two parts; the first part 1 with the hammer is sliding in a groove in
448 the breech screw and the other part 2 with the firing pin is sliding in the groove of a collar 3 which can turn on the spindle of the mushroom head *p*. This collar 3 is held in its place by the nut 4.

Dated this 12th day of July, 1887.

A. SAUVÉE.

Date of application, 12th July, 1887; complete left, 26th Mar., 1888; complete accepted, 4th May, 1888.

A. D. 1887, 12th July. No. 9813.

Complete Specification.

Improvements in breech-loading ordnance.

I Albert Sauvée, of 22 Parliament street, Westminster, in the county of Middlesex, civil engineer, do hereby declare the nature of this invention, which has been communicated to me from abroad by Jean Baptiste Gustave Adolphe Canet, civil engineer, of 91 Avenue Malakoff, Paris, France, to be as follows:

This invention relates to the closing of the breech.

Referring to the drawings accompanying the provisional specification of this application, and which form a part of this description, Fig. 1 shows a longitudinal section of the breech.

Fig. 2 a back view of the mechanism.

Fig. 3 a horizontal section.

Fig. 4 a horizontal section.

Fig. 5 details of the firing mechanism.

Fig. 6 a section of the endless screw X.

Fig. 7 a section through the axis of the worm wheel.

Figs. 8, 9 and 10 the hydraulic mechanism.

The breech is closed by the usual French screw A with interrupted threads which carries at the back a lug with a groove B in which slides a bearing carried by a stud C forming part of a ring D.

This ring is mounted on a collar E which forms a nut working on an endless screw X and which carries at its lower part a pinion F.

The pinion G mounted on the lower end of the endless screw receives its motion from the pinion H by means of an intermediate toothed wheel. The axis of the pinion H carries a worm
449 wheel I gearing with an endless screw J, put in motion by a hand crank or a hydraulic apparatus.

When the hand crank is turned, the motion transmitted to the pinion G causes the endless screw X to turn.

The collar D which cannot turn because one of the teeth of the wheel F is engaged with a groove *a* in the breech, rises and carries with it the bearing.

The breech screw then takes a rotary motion.

When the rotation is sufficient to disengage the screw A from the breech of the gun, the top part of the collar D bears at the top against the support of the endless screw and the pinion F arriving at a certain position where an interruption in the groove *a* releases it and allows it to turn it, follows the rotary motion of the endless screw; this pinion F then gears with a rack K arranged along one of the generating lines of the breech screw which it withdraws from the gun on the carrier R.

Up to this moment the carrier R is connected to the gun by the

bolt L which slides in a groove of the carrier into a socket S fixed on the gun.

The bolt L remains in the socket during the whole of the time that the screw is disengaging itself from the breech of the gun and moves backward on the carrier.

At the moment that the pinion F arrives at the end of the rack, its motion is stopped and the pinion H acting on the intermediate toothed wheel has a tendency to turn the carrier. The bolt L is then withdrawn from its socket S sliding on the two inclined planes *d e*, and enters into a notch *f* made for this purpose in the breech screw; from this moment the carrier can turn freely and the breech screw be connected to the carrier by the bolt L turning round to disengage the breech and allow the loading of the gun.

The rotation of the breech screw, its extraction and the rotation of the carrier succeed one another whilst the hand crank is being turned in the same direction.

The closing of the breech is effected by working the handle in the opposite direction.

In order to work the breech hydraulically I arrange in the back girder or cross-beam of the slide on which the gun saddle recoils a movable press M with a fixed piston N having a double rod.

The movable cylinder carries a rack O gearing with a pinion P, which by means of a transmission shaft Q and toothed wheels acts on the bevel wheel of the shaft on which is mounted the endless screw J.

This system is applicable to all breech screws worked by toothed wheels or an endless screw from a continuous movement as shown in Figs. 8, 9 and 10.

The usual percussion firing mechanism is divided into two parts; the first part 1 with the hammer is sliding in a groove in the breech screw and the other part 2 with the firing pin is sliding in the groove of a collar 3 which can turn on the spindle of the mushroom head *p*. This collar 3 is held in its place by the nut 4.

Having now particularly described and ascertained the nature of the said invention, and in what manner the same is to be performed, I declare that what I claim is:—

1. The new arrangement consisting in completely opening the usual French breech by means of a continuous movement in one direction, the rotation of the breech screw being obtained by the action of a slide moved by an endless screw, a pinion which works the screw in the line of its axis, and which is engaged or disengaged at a given moment, the rotation of the breech on the pivot of the bracket being effected by toothed wheels, substantially as herein described.

2. The arrangement of the bolt of the bracket, substantially as herein described.

3. The new arrangement which consists in making the firing mechanism in two parts, one fixed on the back of the breech screw and the other made movable with the spindle of the mushroom, substantially as herein described.

4. The combination of a hydraulic press having a movable cylin-

der with the parts described for working the breech in all positions of the gun, substantially as herein described.

5. The various modes for the transmission of this movement to all kinds of breech pieces, worked by toothed wheels, substantially as herein described.

6. The arrangement of the accessory parts, substantially as herein described.

Dated this 24th day of March, 1888.

ALBERT SAUVÉE.

(Endorsed:) 3301. D, '93.

451 8.

R. B. D. No. 8. Wm. Herbert Smith, U. S. Commissioner. F'd May 30, '94.

U. S. Circuit Court, District of Maryland. In Equity.

GROSVENOR *et al.*
vs.
DASHIELL.

(2-175*a*.)

DEPARTMENT OF THE INTERIOR,

(Vignette.)

UNITED STATES PATENT OFFICE.

To all persons to whom these presents shall come, Greeting:

This is to certify that the annexed is a true copy from the bound volumes of the library of this office of the provisional and complete specifications and drawing in the matter of the English letters patent granted Albert Sauvée July 4, 1887, number 9453, for improvement in apparatus for working and closing the breech of guns.

Seal Patent Office, United States of America.

In testimony whereof I, N. L. Frothingham, acting Commissioner of Patents, have caused the seal of the Patent Office to be affixed this 24th day of March, in the year of our Lord one thousand eight hundred and ninety-three, and of the Independence of the United States the one hundred and seventeenth.

N. L. FROTHINGHAM,
Acting Commissioner.

A.D. 1857 July 4. No 2453
SAUVEES, Provisional Specification

No. 569
Dashwell
v.
Grosvenor.
p. 452 a

25

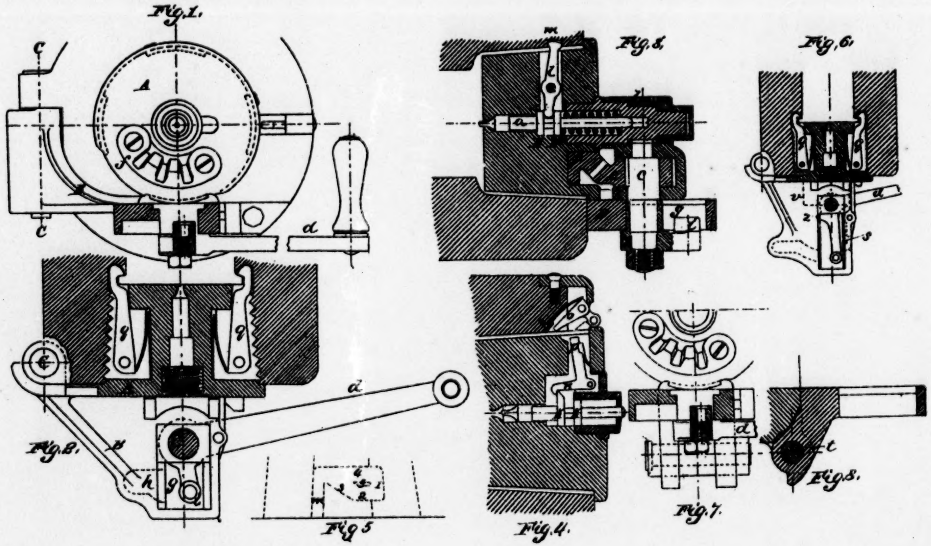

452 Date of application, 4th July, 1887; complete left, 26th Mar., 1888; complete accepted, 4th May, 1888.

A. D. 1887, 4th July. No. 9453.

Provisional Specification.

Apparatus for working and closing the breech of guns.

I, Albert Sauvée, of 22 Parliament street, Westminster, in the county of Middlesex, civil engineer, do hereby declare the nature of this invention, which has been communicated to me from abroad by Jean Baptiste Gustave Adolphe Canet, of 91 Avenue Malakoff, Paris, France, civil engineer, to be as follows:—

This invention has for its object improvements in apparatus for working the breech mechanism of guns known as the French interrupted-screw system. For this purpose I have devised an arrangement by which the various operations are effected by means of an ordinary hand lever.

The figures show the breech mechanism applied to a quick-firing gun with metallic cartridge case and percussion cap, but it can be used as well with breech mechanism of guns fitted with the ordinary obturators.

(Here follows diagram marked p. 452*a*.)

Fig. 1 shows the back of the breech.

Figs. 2 and 3 are horizontal and vertical sections through the axis.

Fig. 4 shows a section through the firing apparatus.

Fig. 5 shows a groove in the gun in which the tail end of the cocking lever works.

The closing screw A is in the form of a truncated cone and is supported as usual when out of the breech by a bracket B pivoted on the hinge C.

On the outside face of the screw and in its axis is a pin *a* secured in the piece *b* which carries a vertical pivot *c* which is made to turn by means of the working lever *d*.

On the pivot *c* is mounted a portion of a pinion *e* in gear with a toothed sector *f* fixed on the face of the breech screw.

The bracket has two grooves, the first *g* in the axis of the gun, the other *h* placed laterally.

The vertical pivot *c* fixed to the breech slides at its lower end in the groove *g*.

453 The working lever is bell-cranked and its small arm carries at the end a small roller *i* which during the motion of the lever engages into the groove *h*.

To open the breech of the gun the lever being at its extreme forward position is brought backwards. During the first part of this motion the pinion *e* is in gear with the toothed sector *f* and gives to the screw $\frac{1}{6}$ or $\frac{1}{8}$ of a turn thus releasing the engaged parts of the

interrupted screw. The motion of the lever continuing, the roller *i* enters groove *h* and finds a bearing point; the axis *c* then slides along groove *g* and brings back the breech screw till the roller strikes against the extremity of groove *h*; the lever then carries the bracket which turns round its axis and leaves the breech of the gun completely open.

The firing arrangement consists in the usual firing pin mounted inside the breech screw. This firing pin has two shoulders K between which works one end of a small cocking lever *l*; the other end works in a groove provided in the body of the gun itself. When the breech is opened after firing and the breech screw turns $\frac{1}{6}$ or $\frac{1}{8}$ of a turn this end of the lever travels along the parts 1, 2, 3, of the groove shown in Fig. 5.

During the travel through part 3 the lower end of lever *l* which is engaged at K between the two shoulders is pushed backward and the striker is cocked.

The forward shoulder lifts up a small spring catch *n* which when falling stops it and keeps the firing pin cocked up till the breech is closed again and a trigger *o* pulled by the lanyard presses against the end *p* of the catch and releases the firing pin, which then strikes the cap under the influence of the spring.

The trigger *o* can only act on the catch when it is exactly opposite to a notch on the breech screw which must therefore be completely screwed up before the gun can be fired.

In a similar way the lever *l* can only release the striker when the closing is completed; if not its end strikes against the partition 5, see Fig. 5, between the two parts of the groove *m*. These two arrangements act as a safety apparatus.

The automatic extractor is housed in the breech screw. The claws or grippers *q* are pressed against the rim of the brass case of the cartridge by means of springs.

454 When the breech screw is closed there is a certain amount of play between the grippers and the rim of the cartridge, so that the shock produced when they meet the rim will release the case. When the bracket begins to turn, the right-hand gripper releases the empty case which is then only acted on by the left-hand gripper.

When the breech screw is cylindrical as shown in Fig. 6 the dimensions of the various parts of the mechanism are modified but the arrangement is the same.

In order to assist the releasing of the case the working lever carries a cam *z* which bears on a boss *v* placed under the bracket.

To the bracket is fitted a bolt or latch *s* which only allows it to turn when the breech screw has come out sufficiently. The other end of this latch prevents any forward motion of the breech screw when the breech is closed, as long as the bracket is not in its place.

Figs. 7 and 8 show another arrangement of breech in which the bracket is lowered by rotating round a horizontal axis.

The motion of the working lever remains the same during the rotation of the breech screw and the drawing out of the breech

screw, but when the breech screw is completely drawn out the breech mechanism falls down by its own weight.

It will be readily understood that the threads of the breech screw may be placed either on a cylindrical surface or on a conical surface according to the arrangement for closing the breech described in patent No. 5565 dated 29th November 1883 for "tube and carriage for the launching of fish torpedoes by means of gunpowder or any similar explosive."

Dated this 4th day of July 1887.

A. SAUVÉE.

455 *Complete Specification.*

Apparatus for working and closing the breech of guns.

I, Albert Sauvée, of 22 Parliament street, Westminster, in the county of Middlesex, civil engineer, do hereby declare the nature of this invention, which has been communicated to me from abroad by Jean Baptiste Gustave Adolphe Canet, of 91 Avenue Malakoff, Paris, France, civil engineer, and in what manner the same is to be performed, to be particularly described and ascertained in and by the following statement:

This invention has for its object improvements in apparatus for working the breech mechanism of guns known as the French interrupted-screw system. For this purpose I have devised an arrangement by which the various operations are effected by means of an ordinary hand lever.

Referring to the drawings accompanying the provisional specification of this application, and which form a part of this description, the figures show the breech mechanism applied to a quick-firing gun with metallic cartridge case and percussion cap, but it can be used as well with breech mechanism of guns fitted with the ordinary obturators.

Fig. 1 shows the back of the breech.

Figs. 2 and 3 are horizontal and vertical sections through the axis.

Fig. 4 shows a section through the firing apparatus.

Fig. 5 shows a groove in the gun in which the tail end of the cocking lever works.

The closing screw A is in the form of a truncated cone and is supported as usual when out of the breech by a bracket B pivoted on the hinge C.

On the outside face of the screw and in its axis is a pin *a* secured in the piece *b* which carries a vertical pivot *c* which is made to turn by means of the working lever *d*.

On the pivot *c* is mounted a portion of a pinion *e* in gear with a toothed sector *f* fixed on the face of the breech screw.

The bracket has two grooves, the first *g* in the axis of the gun, the other *h* placed laterally.

The vertical pivot *c* fixed to the breech screw slides at its lower end in the groove *g*.

The working lever is bell-cranked and its small arm car-
456 ries at the end a small roller *i* which during the motion of the lever engages into the groove *h*.

To open the breech of the gun the lever being at its extreme forward position is brought backwards. During the first part of this motion the pinion *e* is in gear with the toothed sector *f* and gives to the screw $\frac{1}{6}$ or $\frac{1}{8}$ of a turn thus releasing the engaged parts of the interrupted screw. The motion of the lever continuing, the roller *i* enters groove *h* and finds a bearing point; the axis *c* then slides along groove *g* and brings back the breech screw till the roller strikes against the extremity of groove *h*; the lever then carries the bracket which turns round its axis and leaves the breech of the gun completely open.

The firing arrangement consists in the usual firing pin mounted inside the breech screw. This firing pin has two shoulders K between which works one end of a small cocking lever *l*; the other end works in a groove provided in the body of the gun itself. When the breech is opened after firing and the breech screw turns $\frac{1}{6}$ or $\frac{1}{8}$ of a turn this end of the lever travels along the parts 1, 2, 3, of the groove shown in Fig. 5.

During the travel through part 3 the lower end of lever *l* which is engaged at K between the two shoulders is pushed backward and the striker is cocked.

The forward shoulder lifts up a small spring catch *n* which when falling stops it and keeps the firing pin cocked up till the breech is closed again and a trigger *o* pulled by the lanyard presses against the end *p* of the catch and releases the firing pin, which then strikes the cap under the influence of the spring.

The trigger *o* can only act on the catch when it is exactly opposite to a notch on the breech screw which must therefore be completely screwed up before the gun can be fired.

In a similar way the lever *l* can only release the striker when the closing is completed; if not its end strikes against the partition 5 see Fig. 5 between the two parts of the groove *m*. These two arrangements act as a safety apparatus.

The automatic extractor is housed in the breech screw. The claws or grippers *q* are pressed against the rim of the brass case of the cartridge by means of springs.

When the breech screw is closed there is a certain amount of play between the grippers and the rim of the cartridge,
457 so that the shock produced when they meet the rim will release the case. When the bracket begins to turn, the right-hand gripper releases the empty case which is then only acted on by the left-hand gripper.

When the breech screw is cylindrical as shown in Fig. 6, the dimensions of the various parts of the mechanism are modified but the arrangement is the same.

In order to assist the releasing of the case the working lever carries a cam *z* which bears on a boss *v* placed under the bracket.

To the bracket is fitted a bolt or latch *s* which only allows it to turn when the breech screw has come out sufficiently. The other

end of this latch prevents any forward motion of the breech screw when the breech is closed, as long as the bracket is not in its place.

Figs. 7 and 8 show another arrangement of breech in which the bracket is lowered by rotating round a horizontal axis.

The motion of the working lever remains the same during the rotation of the breech screw and the drawing out of the breech screw, but when the breech screw is completely drawn out, the breech mechanism falls down by its own weight.

It will be readily understood that the threads of the breech screw may be placed either on a cylindrical surface or on a conical surface according to the arrangement for closing the breech, described in patent No. 5565 dated 29th November 1883 for "tube and carriage for the launching of fish torpedoes by means of gunpowder or any similiar explosive."

Having now particularly described and ascertained the nature of the said invention, and in what manner the same is to be performed, I declare that what I claim is :—

1. The improved arrangement, by which by the working of a bell-cranked lever and geared wheels, substantially as described, I obtain :—

a. The rotation of the conical or cylindrical well-known French breech screw.

b. The drawing out of the breech screw by means of a suitable groove on which the crank lever bears.

c. The removal of the breech screw from opposite the breech by the revolution of the whole system round a vertical or horizontal hinge on the bracket.

458 2. The improved mechanism which permits the cocking of the firing pin during the rotation of the screw by means of a lever working in a groove purposely provided in the gun, substantially as herein described.

3. The improved firing mechanism, extracting mechanism and safety mechanism, combined with the system of closing the breech as above, or with any other system, substantially as herein described.

Dated this 24th day of March 1888.

ALBERT SAUVÉE.

(Endorsed :) 6625. D, 93.

462 & 463 UNITED STATES PATENT OFFICE.

JOHN P. SCHENKL, of Boston, Massachusetts, assignor to J. P. Schenkl and A. S. Saroni.

Improvement in Breech-loading Fire-arms.

Specification forming part of Letters Patent No. 9943, dated August 16, 1853.

To all whom it may concern:

Be it known that I, John P. Schenkl, of Boston, in the county of Suffolk and State of Massachusetts, have made certain new and useful improvements in breech-loading guns; and I hereby declare the following to be a full, clear, and exact description of the same, reference being had to the annexed drawings, making part of the accompanying specification.

My invention is applicable to that class of fire-arms in which the breech is secured to the barrel of the gun by means of a screw upon both breech and barrel, portions of each screw being cut away to allow the breech to enter the barrel, when a portion of a turn of the breech secures the two together; and my invention consists in a method of unscrewing the breech from the barrel and withdrawing the same, of turning up the breech so as to bring its chamber into a vertical position for loading, and then returning the breech into the barrel and locking the two together, which motions are performed through the intervention of appropriate cams, catches, and springs, by the motion of a single lever, worked by the hand of the gunner.

To enable others skilled in the art to make and use my invention, I will proceed to describe its construction and operation.

(Here follow diagrams marked pp. 459, 460, & 461.)

Figure 1 is a side view of a gun with my improvement attached; Fig. 2, a side view of the same, the breech being unscrewed preparatory to withdrawal; Fig. 3, a side view of the gun with the breech withdrawn and in position for loading. Fig. 4 is a plan. Figs. 5, 6, 7, 8, and 9 are details, which will be referred to hereinafter. In Fig. 10 is seen the manner in which the breech is secured to the barrel.

A screw is cut upon the end of the former, and a corresponding female upon the interior of the barrel. These screws are then marked off into six sections, and the threads upon every alternate section in each are cut away. It is then evident that by turning the breech so that the sections y upon which the threads remain be opposite to the sections y' of the female screw, from which the threads have been cut away, that the one may be slipped into the other. If, now, the breech be made to perform a sixth of a revolution, the sections of a male screw upon which the threads remain

3 Sheets—Sheet 3.

J. P. SCHENKL.

Breech-Loading Ordnance.

No. 9,943.

Patented Aug. 16, 1853.

No. 569.
Dashiell
v.
Grosvenor
} p. 459

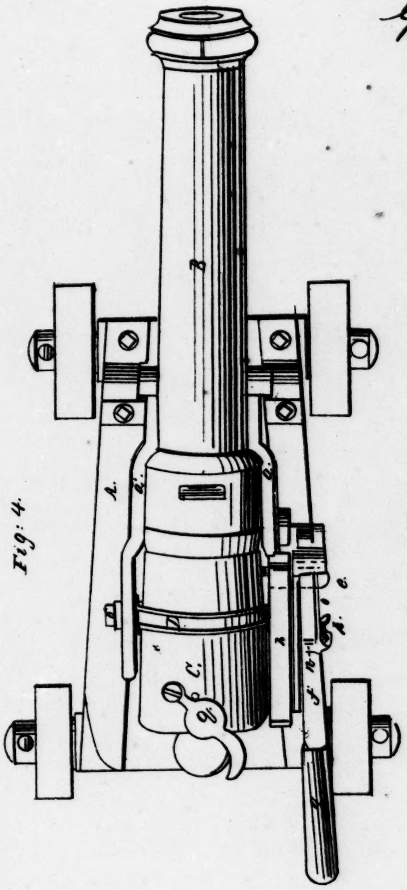

Fig: 4.

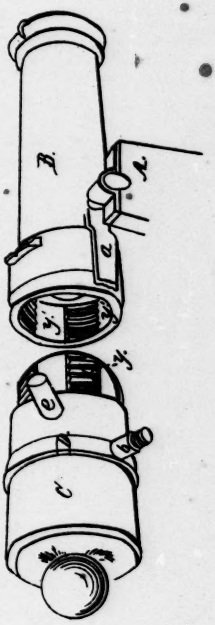

Fig 10

3 Sheets—Sheet 2.

J. P. SCHENKL.

Breech-Loading Ordnance.

No. 9,943. Patented Aug. 16, 1853.

No. 569
Dashiell
v.
Grosvenor
p. 460

Fig 2

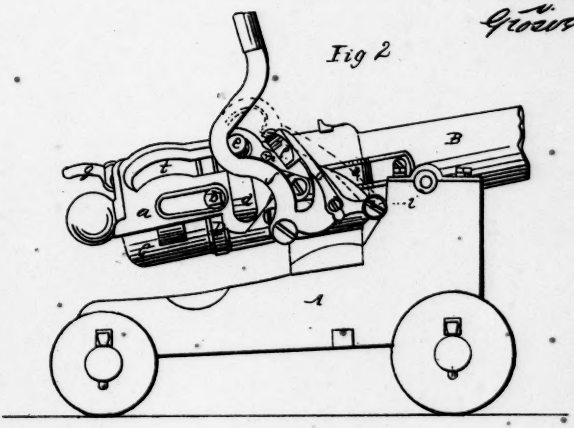

Fig 3

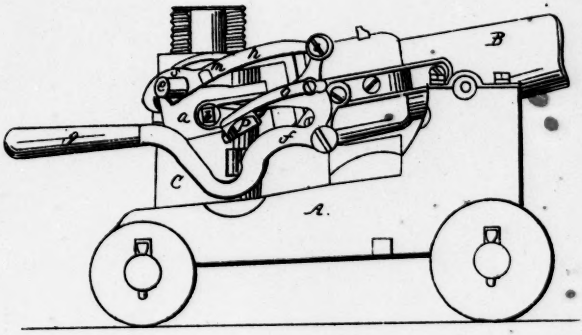

3 Sheets—Sheet 1.

J. P. SCHENKL.

Breech-Loading Ordnance.

No. 9,943. Patented Aug. 16, 1853.

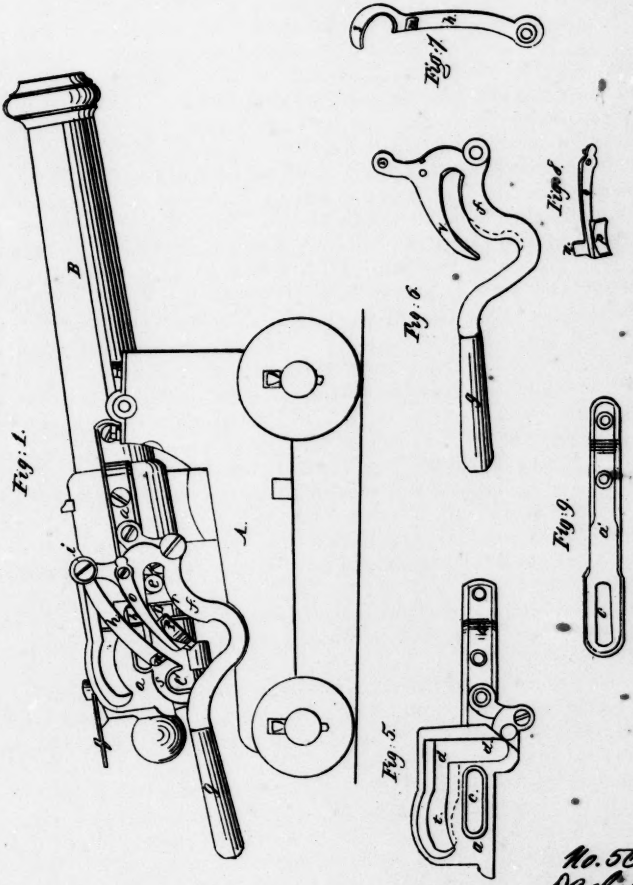

No. 569.
Dashiell } p. 461
v.
Grosvenor

will engage with the screw-sections of the female, and the two will be drawn firmly together.

A is the gun-carriage; B, the barrel of the gun; C, the movable breech.

a a' are straps secured to the barrel of the gun. *a* is seen detached in Fig. 5, and *a'* in Fig. 9.

D is a ring, which surrounds the breech, and in which the latter is permitted to revolve. Upon each side of this ring is a pin, *b*. These pins revolve and traverse in the slots *c* of the straps *a a'*. The strap *a* has also an irregular slot, *d d' t*, in which plays a pin, *e*, secured to the breech, and through which the latter is moved in a manner which will be hereinafter explained.

f is a lever of the form represented in Fig. 6. Pivoted to this lever, at the point *i*, is an operating-dog, *h*, seen detached in Fig. 7. This dog turns freely upon its pivot, and has near to one end a recess or notch, *m*, into which at certain junctures the tooth *n* of the spring *o*, Fig. 8, is allowed to fall. The tooth *n* is raised out of the notch *m* at certain intervals by the pin *e*, which presses against the projection *p* of the spring *o*, and thus the tooth *n* is borne outward sufficiently to clear the lever *h*, which is thus permitted to drop of its own weight. *q* is the cover of the powder-pan.

Operation: In Fig. 1 the gun is represented with the breech in place. When it is desired to withdraw the same for reloading, the handle *g* of the lever *f* is raised. The pin *e* slides along the surface *r* of the lever, and is thereby raised through the vertical portion *d* of the strap *a*, carrying with it the breech, which is permitted to revolve within the ring D, and is thus unscrewed from the barrel of the gun. At the close of this first motion of the lever *f* the parts are in the position represented in Fig. 2, the pin *e* in its passage having raised the spring-tooth *n* out of the notch *m* in the dog *h*, which is thus permitted to fall and grasp the pin *e* with its hook *s*, as seen in Fig. 2. The motion of the lever *f* is now reversed, when the dog *h* forces the pin *e* along the horizontal portion *d'* of the strap *a* until the pin *b* has reached the end of the slot *c*, when the continued operation of the dog *h* causes the pin *e* to revolve round the pin *b* and in the curved portion *t* of the slot. This brings
464 the parts into the position seen in Fig. 3, the breech being in a vertical position and ready for loading. The breech is now to be returned to its former position preparatory to being fired. This is also effected by the motion of the lever *f*, assisted by the hook S of the dog *h*, the lever striking the pin *e* and carrying it first through the curved portion *t* of the slot, which brings the breech again into a horizontal position, and then, as the pin passes through the horizontal portion of the slot, the breech passes into the barrel. The spring-tooth *n* upon the lever *f* remaining in the notch *m* of the dog *h*, the latter is raised out of the way of pin *e*, as seen in dotted lines in Fig. 2. The breech is now to be screwed to the barrel, and for this purpose receives a portion of a turn, which is effected in the following manner: The lever *f* is again depressed, and as the dog *h* is held up out of the way by the spring-tooth *n*, the hooked portion *v* of the lever *f* passes over the pin *e*, which is

thus depressed through the slot *d*, and the breech is again screwed up, as represented in Fig. 1, and the piece is ready for firing.

I do not claim uniting the breech to the barrel by means of male and female screws, portions of which are cut away to enable the one to enter the other, the two being secured together by a partial revolution of one of them, as this has been done before; but

What I do claim as my invention, and desire to secure by letters patent, is—

The above-described combination of parts, for the purpose of operating the movable breech, constructed and arranged substantially as described.

In testimony whereof I have hereunto set my signature this 19th day of April, 1853.

J. P. SCHENKL.

Witnesses:

SAM. COOPER.

H. B. SPINNEY.

J. W. COCHRAN.

Breech-loading Fire-arm.

No. 26,256. Patented Nov 29, 1859.

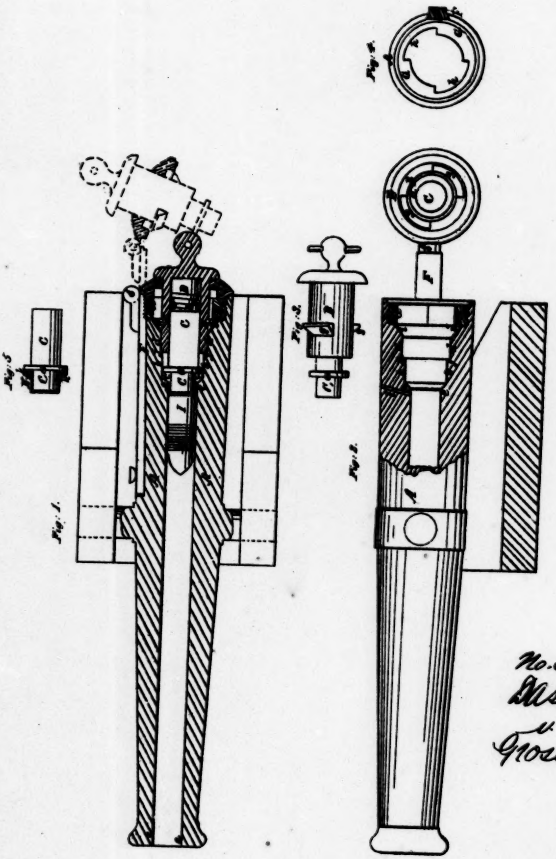

No. 569.
Dashiell
v.
Grosvenor
p. 468

Witnesses,
C. M. Hughes
Mich Hughes

Inventor,
J W Cochran

465 UNITED STATES PATENT OFFICE.

JOHN WEBSTER COCHRAN, of New York, N. Y.

Improvement in Breech-loading and Other Fire-arms.

Specification forming part of Letters Patent No. 26256, dated November 29, 1859.

To all whom it may concern:

Be it known that I, John Webster Cochran, of the city, county, and State of New York, have invented certain new and useful improvements in fire-arms; and I do hereby declare that the following is a full, clear, and exact description of the same, reference being had to the accompanying drawings, forming part of this specification, in which—

(Here follows diagram marked p. 468.)

Figures 1 and 2 are central longitudinal sections, at right angles to each other, of a breech-loading cannon with my improvements. Fig. 3 is a side view of the movable breech-piece. Fig. 4 is a rear view of the gun with the breech-piece removed. Fig. 5 exhibits a side view of what I call the "plunger" of the breech, and a central section of what I call an "accelerating-cartridge."

Similar letters of reference indicate corresponding parts in the several figures.

My invention, though it may be wholly or in part applicable to ordnance and small-arms of all kinds, either breech-loading or muzzle-loading, is more particularly designed for breech-loading ordnance. The nature of the invention consists in a certain construction of and mode of applying the breech, and mode of combining therewith a spring or elastic cushion, which yields to the force so suddenly developed by the explosion of the charge, by which the following results are produced: First, the projectile is started gently, and the great strain that is produced in the chamber of a gun with a rigid breech before and during the starting of the projectile is obviated and recoil is in a great measure prevented; second, a more perfect combustion of the powder is effected; third, provision is made for lubricating the chamber, breech, and bore of the gun; and, fourth, one or more accelerating-chambers are provided to contain charges of powder, for the purpose of giving additional impetus to the ball after it has fairly started.

To enable others to make and use my invention, I will proceed to describe its construction and operation.

A is the gun, which is bored right through, and counterbored from the rear, to receive the hollow breech-piece B and solid sliding breech-pin or plunger C. The front portion of the plunger C, which enters the rear portion of the bore *e e* of the gun, is turned sufficiently small to enable the thickness of the shell of the accelerating-

cartridge D, Fig. 5, to be received between it and the bore of the gun. The rear portion of the said plunger is made cylindrical and somewhat larger than the front portion, and fitted snugly, but easily, into a centrally and cylindrically bored chamber in the breech-piece B, and between the portion which fits the bore of the gun and the portion which fits the bore of the breech-piece there is a collar, *a*, on the said plunger, which fits into the cylindrical front portion, *b b*, of the counterbore of the gun. This collar *a* is not, however, indispensable, as the cylindrical portion *b b* of the counterbore may be made of the same size as the cylindrical bore of the breech-piece B, provided it is sufficiently larger than the bore *e e* of the gun to permit the formation of the accelerating-chamber *c c*, Fig. 1, which will be presently described.

Within the bore of the breech-piece B, and in rear of the pin C, is placed the spring D, of the conical volute kind, which is the only kind that can be made practicable for the purpose, said spring being of very great strength, and being so applied as to prevent its expansion laterally, so that it will yield only with great force, and yield slowly to the action of the force of the explosion of a charge of powder on the front end of the plunger. The front portion of the breech-piece B is fitted snugly but easily within a cylindrical portion, *d d*, of the counterbore in rear of the part *b b*, and the rear portion of the said breech-piece is fitted to turn freely in a ring or circular frame, E, which is hinged by a hinge, *j*, to a slide, F, which works in a groove in one side of the gun, said slide being intended to be operated by a rack and pinion or any other suitable contrivance, to permit the ring E to be moved back far enough to withdraw the breech-piece longitudinally from the gun before moving it aside, as shown in Fig. 2, and in red outline in Fig. 1, to permit the introduction of the projectile and the principal cartridge through the open breech of the gun. The breech-piece may be secured in its place in the gun by being secured in with a complete screw-thread; but I have represented it as being constructed with two lugs, *g g*, which are capable of passing through suitable re-
466 cesses, *h h*, Fig. 4, in the sides of a bushing, G, which is screwed into the open rear of the gun. In front of this bushing a recess, *i i*, is provided all around the counterbore of the gun, to permit the breech-piece to be turned to bring the rear faces of the lugs *g g*, which are made inclined so as to have a screw-like character, into contact with the correspondently-inclined front face of the bushing, for the purpose of forcing up the valve-like front end of the breech-piece B close up to the seat *j j*, that is formed for it between the portions *b b* and *d d* of the counterbore. The bushing G may not be indispensable, as the portion of the gun which the bushing forms may be made of solid metal; but the bushing being screwed in allows it to be adjusted to make the joint at *j j* perfectly tight and to compensate for any wear at the said joint.

The accelerating-chamber *c c*, which I have before spoken of, is formed between the exterior plunger C of the breech and the interior of the front and smaller portion, *b b*, of the counterbore of the gun, as shown in Fig. 1, where the spring D is shown in its nor-

mal condition and the plunger in its most forward position. This chamber might be charged with loose powder; but as this mode of charging might be liable to some objections, I place the charge of powder for the said chamber in the cartridge D*, (represented in Fig. 5.) The shell of this cartridge is made in the form of a cap to fit over the front end of the plunger of the breech; but the whole of the charge is contained in an annular chamber, *k k*, formed round its rear, of such shape as to fill the accelerating-chamber *c c*. Two or more accelerating-chambers may be provided in the same gun.

I will now proceed to describe the loading of the gun and the action and effects which takes place in firing.

The breech-piece being turned to bring its lugs *g g* opposite the recesses *h h*, the slide F is run back far enough to permit the frame E with the breech-piece and plunger to be swung aside, out of the way of the bore, to permit the introduction thereinto of the projectile (shot or shell) H and the principal cartridge I into the chamber of the gun. This projectile and cartridge may be of any known or suitable construction. The accelerating-cartridge D* is put on over the front end of the plunger C, while the breech-piece and plunger are out of the gun, and this being done and the projectile and principal cartridge having been put into the chamber, the breech-piece is swung back again and run into the gun and secured, and on the priming being applied to the vent *l*, which communicates with the cartridge I, all is ready for firing. When the cartridge I explodes, the force so suddenly developed is exerted partly on the projectile and partly on the plunger C, and drives back the plunger upon the spring D, which slowly yields and is compressed, thereby easing the starting of the ball and preventing the sudden and violent strain to which the breech and chamber of other guns, whether breech or muzzle loading, are subject at the instant of the explosion of the charge. The force of the explosion acting on the head of the accelerating-cartridge causes the latter cartridge to recede along with the plunder, and when they have receded so far that the head of the cartridge C and face of the plunger have passed beyond the bore *e e*, the fire enters the accelerating-chamber, and, destroying the thin fusible metal of which the front part of the said chamber *k* of the accelerating-cartridge is composed, ignites the charge within said chamber, and causes the ball to derive another impact from the explosion of said charge. Before the projectile leaves the gun the pressure of the gas is so far reduced that the spring D is allowed to react upon the plunger and drive the latter forward, and hence the force expended in driving the plunger back is not lost, but all given out upon the projectile.

The shell of the accelerating-cartridge, being made of soft metal, constitutes a very effective packing to prevent gas passing by the collar *a* or corresponding shoulder of the plunger, said shell being driven back against the said collar and shoulder, and caused to expand outwardly against the sides of the chamber *c c* both by the force of the explosion of its own charge and by that of the charge in the cartridge I.

The plunger C, besides constituting an elastic cushion, as above de-

scribed, acts as a safety-valve in case of the charge in the accelerating-chamber becoming accidentally ignited, for the force of the explosion acting upon the front of the collar *a* or corresponding shoulder drives back the plunger until the fire reaches the principal cartridge and the gun is discharged instead of being exploded.

To provide for the lubrication of all parts of the gun, I propose to introduce every time the gun is loaded, or as often as may be desirable, to the interior cavity, *m m*, of the breech-piece a quantity of water, not sufficient to interfere with the operation of the plunger and spring. When the plunger is driven back, a small quantity of this water is caused to pass between it and the sides of the breech-piece into the accelerating-chamber and into the bore *e e*, thereby not only effecting lubrication of the parts, but extinguishing any sparks that may be left by the explosion. The water thus introduced also constitutes a packing between the breech-piece and plunger to prevent any gases getting into the chamber *m m*.

The plunger C and spring D may be applied to muzzle-loading guns, and a similar accelerating-chamber, *c c*, may be provided in such guns; but such chamber, owing to the difficulty or impossibility of introducing a cartridge, must be loaded with loose powder by a suitable opening provided for the purpose.

I do not claim, broadly, the invention of applying an elastic cushion in the breech of a gun, as I am aware that such a contrivance has been employed; nor do I claim the invention of
467 accelerating-chambers so applied to fire-arms that the charges contained therein are fired after the ball has started; but

What I claim as my invention, and desire to secure by letters patent, is—

1. So constructing and applying one or more accelerating-chambers, in combination with the plunger or elastic cushion, that the charge or charges in the accelerating chamber or chambers are fired by the driving back of the plunger or cushion, and that the plunger or cushion serves as a safety-valve to the accelerating-chambers, substantially as herein described.

2. Combining the movable breech-piece B, containing the plunger or elastic cushion, with a ring or circular frame E, hinged to a slide, F, which works longitudinally to the gun, the whole operating substantially as described.

3. In combination with the breech-piece B, secured in place by a screw or its equivalent, the adjustable screwed bushing G, applied to the gun, substantially as and for the purpose herein described.

4. The combination of the plunger C, accelerating-chamber *c c*, volute spring D, movable breech-piece B, ring or frame E, and slide F, the several parts constructed and applied to the gun, and operating substantially as herein described.

J. W. COCHRAN.

Witnesses:
CHS. M. HUGHES.
MICH. HUGHES.

W. F. GOODWIN.

Breech-Loading Ordnance.

No 43,110. Patented Jnne 14, 1864.

No. 569 Dashiell v. Grosvenor } p. 471

Fig. 1.

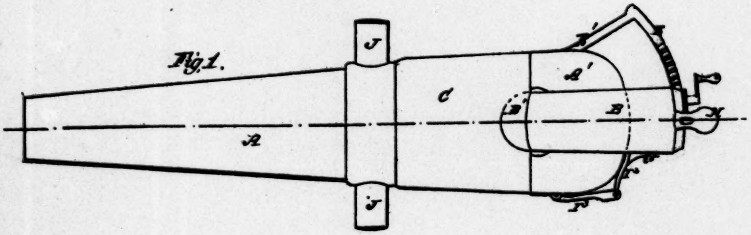

Fig. 2.

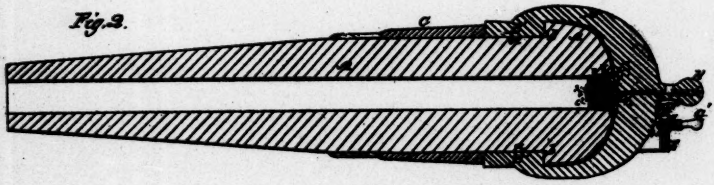

Fig. 3.

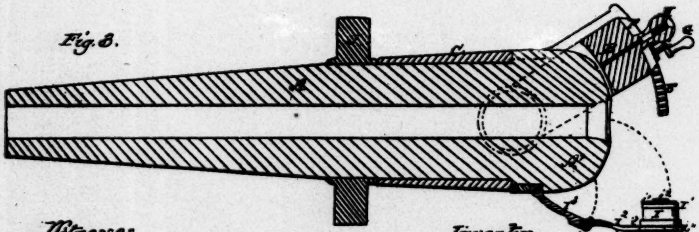

Witnesses

Charles D. Smith

R. H. Mayhew

Inventor.

Wm F. Goodwin

469

UNITED STATES PATENT OFFICE.

WILLIAM F. GOODWIN, of Powhatan, Ohio.

Improvement in Breech-loading Ordnance.

Specification forming part of Letters Patent No. 43110, dated June 14, 1864.

To all whom it may concern:

Be it known that I, William F. Goodwin, of Powhatan, in the county of Belmont and State of Ohio, have invented certain new and useful improvements in breech-loading ordnance; and I do hereby declare the following to be a full and exact description of the same, reference being had to the accompanying drawings, making part of this specification, in which—

(Here follows diagram marked p. 471.)

Figure 1 is a plan of a cannon illustrating my invention. Fig. 2 is a vertical longitudinal section of the same in the line *x x*, Fig. 1. Fig. 3 is a horizontal section, showing the parts in position for loading.

Similar letters of reference indicate corresponding parts in the several figures.

This invention relates, first, to a swinging yoke or breech-piece of novel and improved construction; second, to a gun so formed as to adapt a swinging yoke or breech-piece formed in one piece to be applied and secured without employing trunnions as a means of attachment; third, to a breech-plug of peculiar construction, and to a novel device for adapting the same to be more readily inserted or removed.

In order that others skilled in the art to which my invention appertains may be enabled to fully understand and use the same, I will proceed to describe its construction and operation.

In the accompanying drawings, A may represent a gun formed or cast at its breech with an enlargement, A′.

B represents a yoke or breech-piece adapted to be turned in a horizontal plane at the rear of the gun, in order to cover and secure the breech-plug in position when the gun is to be fired, or permit the breech-plug to be removed when the gun is to be loaded. This yoke B is constructed in one piece of solid wrought-iron, in form substantially as shown in Fig. 2. On its ends are formed circular flanged cheeks B′ B′, each of which occupies a corresponding countersink, *a*, which countersinks are formed partially in the enlargement A′ and partially in a re-enforce, C, and when the cheeks B′ are in their respective countersinks they are prevented from displacement by means of flanges *b b*, which fit in corresponding grooves in the countersinks.

From the above description it will be seen by my invention no

difficulty whatever will be involved in applying and screwing the yoke to the gun, as in doing this it is only necessary to insert the cheeks B′ B′ into the semi-countersinks in the enlargement A′ previously to the application of the re-enforce C, and then shrink on the re-enforce in customary manner.

Another advantage gained in thus attaching the yoke is that the latter may be formed in one solid piece of the smallest dimensions which strength will permit, without necessitating the employment of an additional pair of trunnions or making the arms of the yoke long enough to reach from the rear of the breech to the trunnions J, upon which the gun is mounted.

E represents a rigid segmental rack, extending inward from an arm, E′, which latter is rigidly secured to the enlargement A′.

Between the rack E and a rack, F, on the rear end of the yoke B works a loose pinion, G, which may be turned so as to change the position of the yoke B by means of a crank-handle, G′. The pinion G′ may be adapted to require but half a turn to move the yoke from one position to the other, and it is designed to so arrange the crank G′ that it will be unnecessary to bring it in close proximity with the cascabel H, in order to impart the requisite movement to the pinion G.

I represents a breech-plug, which is made in tapering form, and adapted to fit within a corresponding receptacle or chamber in the breech and be securely retained therein by the yoke B, which presses snugly against the rear end of said plug when the parts are in position for firing.

I′ represents a ring formed of vulcanized india rubber or other elastic material, which fits over a stem, i, formed upon the breech-plug I, and is secured in proper position and preserved from contact with the fire by means of a disk, i', which may be pressed with the requisite firmness against the elastic ring I′ by a screw, i^2, which fits within a corresponding screw-threaded aperture in the stem i.

Upon the rear end of the plug I is formed a flange, i^4, between which and the face of the chamber in which the plug I rests is interposed an elastic spring, i^3, which may be of sufficient strength to either loosen or entirely expel the breech-plug when the yoke B is moved out of contact with the rear end thereof. It will be seen that by this arrangement the escape of gas at the rear of the gun is effectually prevented by the backward force of the explosion, which, taking effect upon the disk i', expands the ring I′, and forms a perfectly gas-tight joint.

I^2 represents an arm securely attached at one end to the plug I, and at its other end hinged to an arm, I^3, which in turn may be hinged to the enlargement A′. These arms are designed to support the breech-plug I when withdrawn, and expedite as well as facilitate the insertion or removal of the same.

j' represents the vent, which, as shown, is partially constituted by an aperture through the screw i^2, and communicates with corresponding apertures in the yoke B and cascabel H, in the latter of which the primer is inserted. Should the perforated screw i^2 be-

come injured by contact with the fire or otherwise, it may of course be replaced.

j' j^2 represent key-holes, into which is inserted the key, which may be employed for withdrawing the plug I.

i^5 may represent a projection upon the arm I^2, which constitutes a stop to arrest the turning of the yoke B, when it reaches the proper position to securely retain the breech-plug.

If preferred, the yoke B may be used independently of or without a re-enforce, and for the enlargement A′ may be substituted separate bosses or projections, in which may be made the countersinks for the reception of the ends of the yoke, instead of having the projecting metal extend completely around the gun, as described.

Having thus described my invention, the following is what I claim as new therein and desire to secure by letters patent:

1. A swinging yoke or breech-piece constructed, substantially as described, with cheeks B′, by which it is secured to the gun without requiring the employment of trunnions, screws, or bolts.

2. In combination with the above, a cannon formed with an enlargement A′, and recesses or countersinks *a*, receiving and securing the ends of the yoke and constituting the bearings on which it is oscillated, substantially as explained.

3. The doubly-jointed swinging arms I^2 I^3, for carrying the breech-plug I, and permitting the ready insertion and withdrawal of the same, substantially in the manner specified.

4. The spring i^3, employed in the manner described, to close the joint at the rear of the breech-plug, and loosen or expel the latter when the yoke is turned back.

5. The combination of the racks E F, and loose pinion G, for operating the swinging breech-yoke B, in the manner explained.

WM. F. GOODWIN.

Witnesses:
CHARLES DUBOIS.
CHARLES D. SMITH.

479 UNITED STATES PATENT OFFICE.

WILLIAM HALE DRIGGS, of Washington, District of Columbia, assignor of one-half to Seaton Schroeder, of same place.

Breech-loading Ordnance.

Specification forming part of Letters Patent No. 360,798, dated April 5, 1887. Application filed February 25, 1887. Serial No. 228,816. (No model.)

To all whom it may concern:

Be it known that I, William Hale Driggs, a citizen of the United States, residing at Washington, in the District of Columbia, have invented certain new and useful improvements in breech-loading ordnance; and I do hereby declare the following to be a full, clear, and exact description of the invention, such as will enable others skilled in the art to which it appertains to make and use the same.

My invention has for its object certain improvements in breech-loading ordnance, and more particularly in the class of rapid-firing single-shot guns; and it consists in the construction and combination of parts, hereinafter described, and pointed out in the claims. This object I accomplish by the mechanism illustrated in the accompanying drawings, forming part of this specification, wherein the same letters of reference denote the same or corresponding parts in the several views, and in which—

(Here follow diagrams marked pp. 472, 474, 476, & 478.)

Figure 1 represents a longitudinal section of the breech end of the gun, with the breech-block and the adjoining parts in side elevation, the chamber being closed, as it would appear at the moment of firing. Fig. 2 shows the same parts in full and dotted lines, with the breech-block moved into position for opening the chamber for the reception of the cartridge. Fig. 3 is a rear elevation of the breech end of the gun, the breech-block being in position for closing the chamber. Fig. 4 is a similar view representing the same parts, but with the breech-block in position for exposing the chamber. Fig. 5 is a side elevation of the breech-block and the adjoining parts, a portion of said block being broken away to show the firing-pin in its opening and the upper ends of the wings of the mainspring resting against the front and rear shoulders on said pin. Fig. 6 is a horizontal section on the line *x x*, Fig. 1. Fig. 7 is a detail plan view of the firing-pin. Fig. 8 is a rear view of a portion of the breech-block, the vertically-movable slide, and the casing fitted over the same and over a portion of the central recess in the rear face of said breech-block, the firing-pin being shown in section. Fig. 9 shows a side elevation of said casing and screws for securing the same to the breech-block. Fig. 10 is a top plan view of the same, and Fig. 11 is a detail perspective view of the short rock-

(No Model.) 4 Sheets—Sheet 1.

W. H. DRIGGS.

BREECH LOADING ORDNANCE.

No. 360,798. Patented Apr. 5, 1887.

Fig. 1.

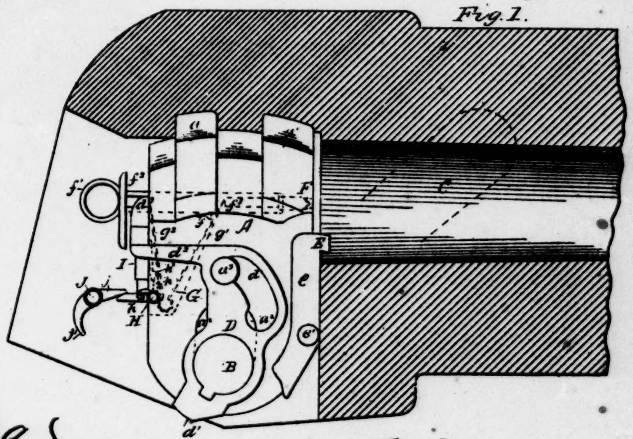

No. 569.
Dashiell p. 472
v.
Grosvenor

Fig. 2.

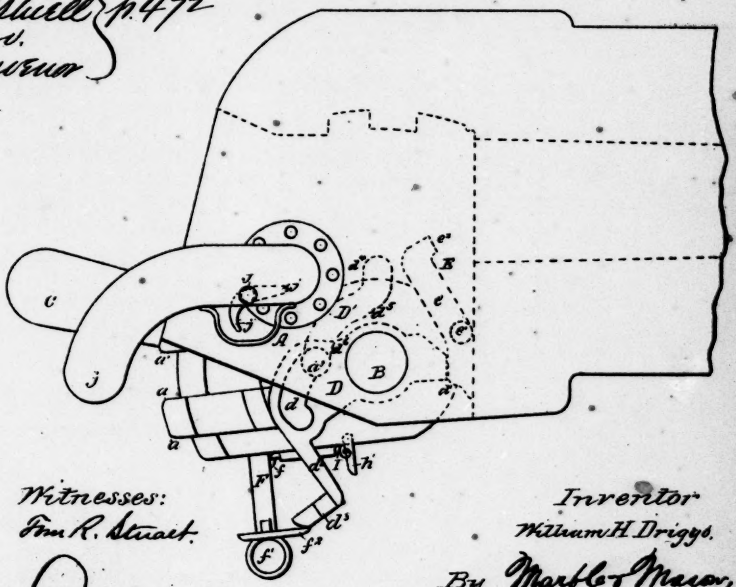

Witnesses:
Fm R. Stuart.
L. W. Morris

Inventor
William H. Driggs.
By Marble & Macon,
Attys.

(No Model.) 4 Sheets—Sheet 2.

W. H. DRIGGS.

BREECH LOADING ORDNANCE.

No. 360,798. Patented Apr. 5, 1887.

Fig. 3.

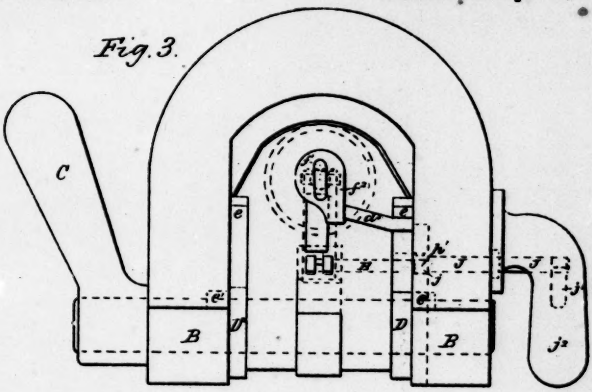

No. 569.
Dashiell v. 474
v.
Governor.

Fig. 4.

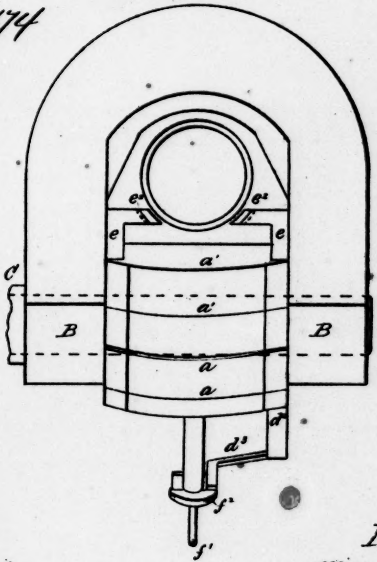

Witnesses:
Fred R. Stuart
L. W. Harris

Inventor
William H. Driggs.
By Marble & Moore,
Attys.

(No Model.) 4 Sheets—Sheet 3.

W. H. DRIGGS.

BREECH LOADING ORDNANCE.

No. 360,798. Patented Apr. 5, 1887.

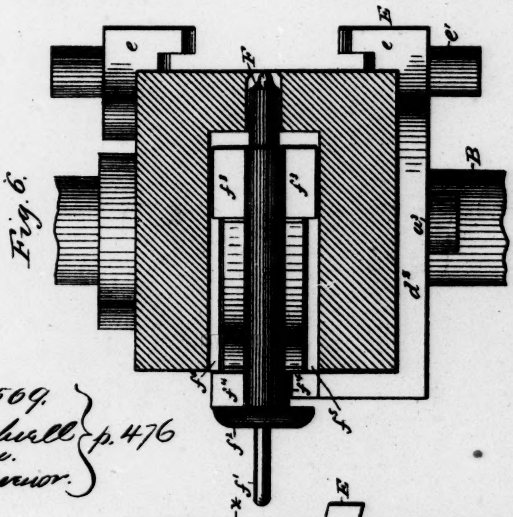

Fig. 6.

Fig. 7.

No. 569. Dashiell } p. 476
v. Governor.

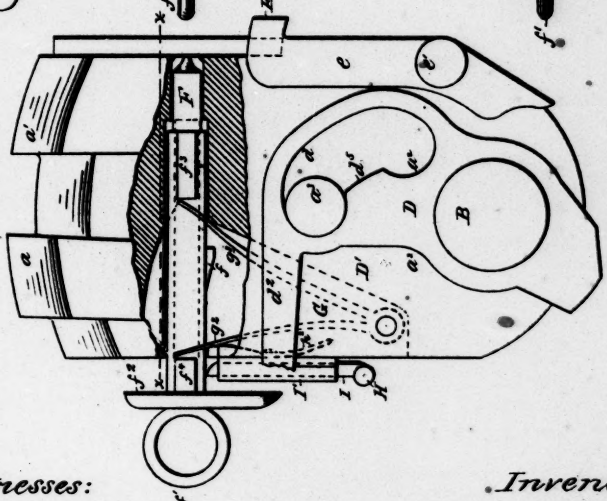

Fig. 5.

Witnesses:
Tom R. Stuart.
L. Seward Beers.

Inventor:
William Hale Driggs.
By Marble & Mason,

(No Model.) 4 Sheets—Sheet 3.

W. H. DRIGGS.

BREECH LOADING ORDNANCE.

No. 360,798. Patented Apr. 5, 1887.

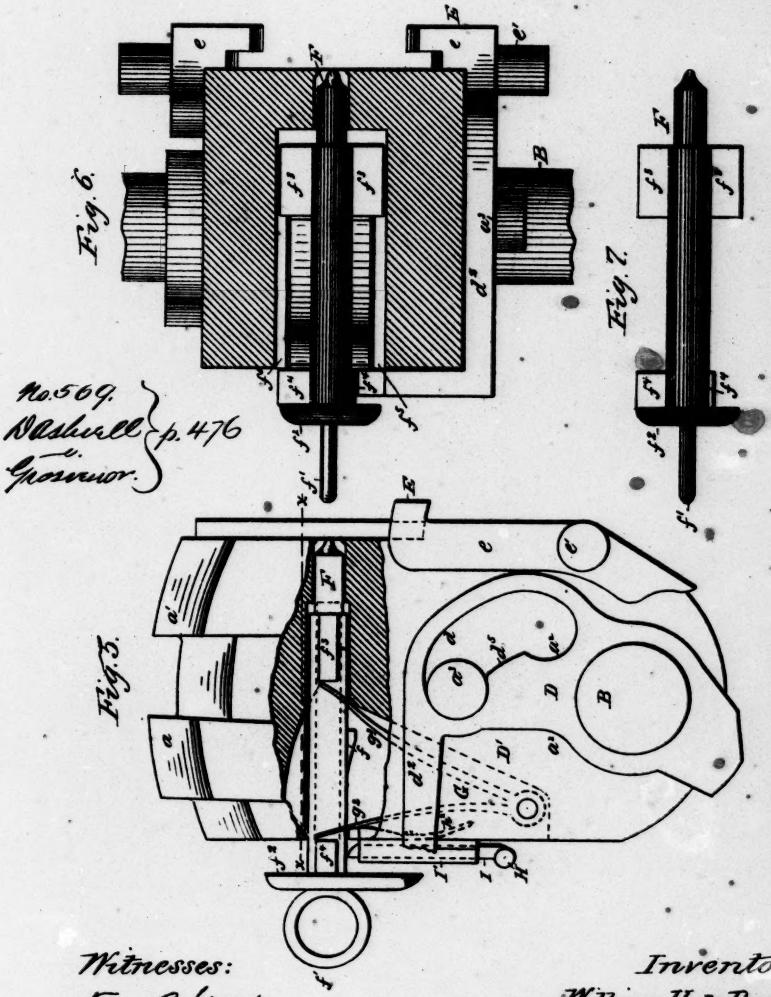

No. 569.
D Ashwell
v.
Grosvenor.
p. 476

Witnesses:
Tom R. Stuart.
L. Seward Bacon

Inventor:
William Hale Driggs.
By Marble & Mason,

(No Model.) 4 Sheets—Sheet 4.

W. H. DRIGGS.

BREECH LOADING ORDNANCE.

No. 360,798. Patented Apr. 5, 1887.

Fig. 8.

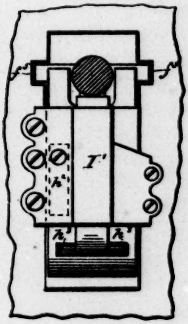

Fig. 9.

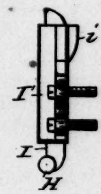

Fig. 10.

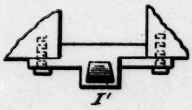

No. 569
Dashiell
v.
Grosvenor
p. 478

Fig. 11.

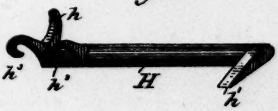

Witnesses:
Tom R. Stuart.
L. Seward Bacon

Inventor:
William Hale Driggs.
By Marble & Mason,
Attys.

shaft provided with the horizontal and vertical arms and the hook-shaped catches.

A represents the breech-block, which is provided on its upper convex surface with bands or projections *a a'*, fitting into correspondingly-shaped recesses in the upper interior surface of the gun-breech and extending downward below the center line of the chamber. These bands and their grooves firmly hold the breech-block in position and prevent backward movement of the same during firing.

B is a stout steel shaft or axis fitted in openings in the breech and extending out beyond the same on its left side, where it is provided with an operating-handle, C, for a purpose which will be hereinafter stated. This axis passes loosely through an elongated opening, a^2, in the lower portion of the breech-block, as shown in Fig. 1, so as to allow of a down and up movement of said block on a line inclined about two degrees from the vertical. A pin or stud, a^3, projects from the side of the breech-block at or near its center, and passes into an irregularly-curved or cam-shaped groove, D', formed in the inner wall or cheek of the breech. The peculiar shape of this groove is shown in dotted lines in Fig. 2, in which its walls are nearly vertical for a short distance from its upper end, as shown at d^4. From this point said walls incline slightly to the rear from the vertical walls, as shown at d^5, and then continue on in curved lines d^6 to the bottom of said groove.

D is the cam. It is rigidly fixed to the axis B and adapted to be moved therewith by the handle C. This cam is formed in its upper portion with an opening, *d*, having curved ends, of the form shown in Fig. 1, and is provided at its lower portion with a curved or convexed end, *d'*, and at its upper portion with a rearwardly-extending arm, d^2, having a right-angled extension, d^3, terminating in front of the head of the firing-pin, for retracting or cocking the same.

E represents the cartridge-extractor, which consists of two vertically-extending limbs, *e e*, loosely pivoted upon bolts *e' e'*, fixed in the inner walls of the breech-chamber, at the sides of the front part of the breech-block and forward of the axis of the operating-
480 lever, one of said limbs being arranged in front of the cam D and the other in front of the cam D^2 on the rod or axis B at the opposite side of the breech-block. The lower ends of the limbs in front of cams D and D' are slightly concaved on their rear faces, and extend slightly rearward, so as to leave space for their movement by the curved ends *d'* of the cams. The upper ends of the limbs *e* have right-angled extensions e^2, for projecting in front of and against the flange of the cartridge.

Through the breech-block A, from front to rear, is formed an opening for the firing-pin, and at the horizontally-opposite sides of said opening, and communicating therewith, are also formed the grooves f^5 f^5. The firing-pin F passes through said opening, and is provided with the bottom projection, *f*, the ring *f'*, and the head f^2, projecting over the extension d^3 on the arm d^2 of the cam. Said firing-pin is also provided with front and rear shoulders, f^3 and f^4, on each side, as shown in Figs. 5, 6, and 7, which fit and are adapted to

slide in the grooves f^5 f^5, and thus secure positive or direct guidance of said pin. Against the front shoulders the front wing, g', of the mainspring G presses when the firing-pin is retracted, the other wing, g^2, of said spring resting freely against the rear shoulders, f^4, on said firing-pin, or in elongated slots or against stops in the central recessed part of the rear face of the breech-block. The mainspring is formed of broad steel plate, broader than the diameter of the firing-pin, and is bifurcated at the upper ends of its wings for permitting them to extend up on each side of the firing-pin, the front one to operate against the front shoulders thereon and the rear one to rest against its rear shoulders and against a forwardly-extending projection, *i*, (prominently shown in Figs. 5 and 9,) of the casing I′, hereinafter described.

H is a short rock-shaft fitted in the rear part of the breech-block, and having one end projecting beyond the side thereof and the inner end extending to its center. At its projecting end it is provided with a horizontal arm, h', and at its inner end with the vertical arm *h*, which is normally held from downward movement by a leaf-spring, h^2, suitably secured to the casing I′, as shown in dotted lines in Fig. 8. This short rock-shaft, at the inner end, which projects to the center of the breech-block and in rear of the vertical arm *h*, is provided with hook-shaped catches h^2 h^2, which embrace the lateral extensions h^3 h^3 at the lower end of a vertically-movable slide, I, which is inclosed by the casing I′, which is open at its ends and secured to the rear of the breech-block. The upper end of this slide projects in front of the projection *f* on the firing-pin when the latter is drawn back.

J is a rock-shaft passing transversely through the right wall of the gun-breech, and having its inner end terminating in a recess in said wall and in rear of the breech-block. At its inner end it is provided with a rigidly-attached trip or finger, *j*, which projects slightly over the arm h' of the short rock-shaft H, and at its outer end it has a rigidly-secured finger-piece or trigger, j', projecting downward in front of the hand-rest j^2.

The operation of the parts thus described is as follows: Fig. 1 represents the breech as closed, or as it would appear after the discharge of the gun. To open the chamber and extract the cartridge-shell, the handle C is turned, and by it the axis B and the attached cam D are also turned, the latter being moved downwardly and rearwardly. This movement is accomplished by the pin or stud a^3 on the breech-block projecting through the opening *d* of the cam and into the cam-groove D′ in the inner wall of the breech, said cam-groove, owing to the described contour of its walls d^4, d^5, and d^6, first moving the stud and block vertically downward the extent of its vertical walls d^4, the bands *a* a' on the upper surface of said block being thus forced from the grooves in the breech. With further movement of the handle C and cam D the pin or stud a^3 is moved down the inclined walls d^5 of the cam-groove, and thence along the curved walls d^6, forming its lower portion, the latter portion of the movement of said pin or stud being in the arc of a circle whose center is the center of the rod or axis B. When the parts are in this

position, with the pin or stud a^3 in the lower end of the cam-groove D′ and in the then upper end of the opening d in the cam D, the breech-block is then in its lowest position, which is about horizontal, and the chamber is open and ready for a new cartridge. During this rearward movement of the breech-block for opening the chamber, the lower convexed end, d', of the cam D and also the cam on the other side of the block come in contact with the concaved rear faces of the lower ends of the limbs $e\ e$ of the cartridge-extractor E, thus forcing the upper ends of the limbs and their right-angled extensions e^2 rearwardly, and thereby ejecting the empty cartridge case or shell. The first part of the movement of the upper parts of the limbs $e\ e$ of the extractor is slow and powerful, and afterward rapid, so that the cartridge case or shell shall be thrown quickly out of the chamber. In the movement of the breech-block and cam to the rear, or into the position shown in Fig. 2, the arm d^2 of the cam comes in contact with the head f^2 of the firing-pin F and pushes the same to the rear until the projection f thereon comes beyond the upper end of the vertically-movable slide I, by which it is held until released by the trigger j' and the intermediate devices. With the parts named in the positions just stated, the cartridge is placed in the chamber, and, by turning the handle back to its original position, the breech-block is also moved back and closes said chamber. During this movement the pin or stud a^3 remains in the then upper curved portion of the opening d of the cam D until the inclined wall d^5 of the cam-groove D′ in the breech are reached, when it is raised out of that position by
481 said inclined walls and forced up into the then elevated curved portion of the opening d. In this position the breech-block is raised bodily up until its bands fit into the grooves or recesses in the breech of the gun, and the cam, being drawn forward, brings the extension d^3 of its arm d^2 close up to the rear surface of the breech-block. The horizontal arm h' of the rock-shaft H is then under and against the trip or finger j', which projects from the inner end of the rock-shaft J, which is operated by the trigger j' on its outer end and beneath the hand-rest j^2. The parts being in this position, the gun is ready for firing. The trigger j' is then removed to the rear and turns the rock-shaft J and its finger j downward. The latter also forces downward the horizontal arm h' of the rock-shaft H, lowers the slide I, and releases the firing-pin, which is then thrown forward against the primer by the action of the V-shaped mainspring G, the front wing, g', of said mainspring pressing against the front shoulders, f^3, on the side of the firing-pin, and the rear wing, g^2, resting against the rear shoulders, f^4, thereof. The firing-pin, after its release from the tension of the spring, continues forward by virtue of its weight and momentum, and, after striking the primer, is drawn back a short distance by the reactive force of the rear wing of the spring, which has been slightly compressed by the rear shoulders of the firing-pin in the forward movement of the latter, thus bringing the point of the firing-pin inside of the face of the breech-block and away from the primer, so that no obstacle re-

mains to the downward movement of said breech-block when opening the breech for a new charge.

Prominent among the advantages of my invention is the arrangement of the center of the pin or stud a^3 slightly forward of a vertical plane passing through the center of the axis B when the breech-block is in its up or closed position, whereby the breech-block is enabled to resist backward and downward pressure upon its face from the exploded charge. Also, back-pressure is further resisted by the bands a a' of the breech-block fitting in the grooves in the upper wall of the gun-breach, since to open the block at all it must first be lowered out of the grooves. Also, any downward pressure is resisted by the pin or stud a^3, as any pressure thereon only acts to push the block forward and lock it tighter than before. Also, as the right-angled extension d^3 on the cam-arm d^2 is not close against the back of the block until the latter is securely locked in position, should the firing-pin be accidentally released before said block is closed, the head f^2 on the firing-pin will come in contact with said extension d^3 on the cam-arm d^2 and prevent the point of the firing-pin from striking the primer, thus avoiding premature discharge of the gun.

My breech-loading gun, with the parts constructed, arranged, and operating as described, is not only capable of being rapidly operated or fired, but is simple, strong, and not liable to get out or order.

It is obvious that minor changes can be made in the construction and arrangement of the parts without departing from the nature or principle of my invention—as, for instance, the cam and its adjuncts, as shown in Fig 1 of the drawings, may be duplicated on the opposite side of the breech-block, if necessary or desired. Also, I may find it desirable to use a spring-catch on the handle of the breech-block to prevent the breech from being accidentally opened, and also for the purpose of indicating by its clicking sound (at night or in the hurry of battle) that the closure of the chamber is complete.

Having thus fully described my invention, I claim as new the following:

1. In a gun in which the breech-block first moves downward in opening and then swings backward and downward, the combination, with the gun-breech provided with grooves in its upper wall, of the pivoted breech-block A, provided on its upper surface with bands or projections a a', adapted to fit in said grooves and hold said breech-block firmly in place, and means for moving the breech-block into and out of said grooves, substantially as described.

2. The combination of the gun-breech, the breech-block A, having the stud or pin a^3, the cam D, having the opening d, with curved ends, in which said stud or pin is supported, and the axis B, which carries said cam, passing through said breech-block and having its center to the rear of the vertical plane passing through the center of said stud or pin a^3 when the breech-block is closed, whereby back-pressure upon the face of the block is resisted, substantially as described.

3. In a gun in which the breech-block first moves downward in opening and then swings backward and downward, the combina-

tion, with the gun-breech having the cam-groove D′ in its inner wall, of the breech-block A, having the stud or pin a^3 and the elongated opening a^2, and mechanism for moving said breech-block out of and into operative position, consisting of the shaft or axis B, passing through said elongated opening, the cam D, rigidly attached to the axis and having the opening d, with curved ends, to receive the stud or pin a^3, and the handle C, attached to said axis, for operating the same, the cam, and the breech-block, substantially as described.

4. The combination of the breech having the interior cam-groove, D′, provided with nearly vertical walls d^4 at its upper end, slightly-inclined and rearwardly-extending walls d^5 below said vertical walls, and curved walls d^6 for the rest of its length, the breech-block A, having the stud or pin a^3 and the elongated opening a^2, the shaft or axis B, passing through said opening, the cam D, having
482 the opening d, with curved ends, to receive the pin a^3, and the handle C, attached to said axis, for operating the same and the cam and breech-block, substantially as described.

5. In a gun in which the breech-block in opening first moves downward and then swings backward and downward, the combination of the gun-breech, the breech-block, the cartridge-extractor E, consisting of the vertical limbs e e, having the right angled extensions d^3 at their upper ends, the lower ends of said limbs e projecting slightly rearward and being concaved, the pivotal bolts e' e', fixed in the inner walls of the breech-chamber forward of the pivot of the operating lever, the axis B, having a cam on each side of the breech-block for operating the extractor, said cams having curved ends, and means for operating said axis and cams, substantially as described.

6. In a gun in which the breech-block in opening first moves downward and then swings backward and downward, the combination of the breech, the breech-block having the pin or stud, the shaft or axis having the handle, the cam attached thereto, and having the opening with curved ends to engage the pin on the breech-block, and the rearwardly-extending arm provided with the right-angled extension, and the firing-pin having a head against which said extension of the cam-arm abuts for retracting the firing-pin, substantially as described.

7. The combination of the breech-block A, the mainspring G, the firing-pin F, having shoulders for the front and rear wings of said spring and a projection on its under side, and mechanism for retracting said firing-pin, with the short rock-shaft H, the vertically-movable slide I, secured to said rock-shaft, and devices for moving said shaft, lowering the slide, and releasing the firing-pin, substantially as described.

8. The combination of the breech-block, the firing-pin movable therein, devices for retracing the latter, and the vertical slide for holding the same when retracted, with the spring-controlled short rock-shaft provided with the horizontal and vertical arms and a trip or finger for depressing the horizontal arm on said rock-shaft, and

means for releasing the slide from the firing-pin, substantially as described.

9. The combination of the breech-block, the firing-pin, devices for retracting the latter, and the vertical slide for holding the same when retracted, with the spring-controlled short rock-shaft, to which said slide is secured, provided with horizontal and vertical arms, the rock-shaft arranged in a line to the rear of said short rock-shaft, and provided with a horizontal finger at its inner end and with a trigger at its outer end, and the hand-rest, substantially as described.

10. The combination of the breech, the breech-block, the firing-pin, the cam provided with the rearwardly-extending arm having an extension for retracting said pin, and means for operating the cam, with the vertical slide for holding said pin when retracted, the spring-controlled short rock-shaft, to which said slide is secured, provided with horizontal and vertical arms, and means for depressing the horizontal arm of said rock-shaft, and thus releasing the slide from the firing-pin, substantially as described.

11. The combination of the breech, the breech-block, the firing-pin, the cam provided with a rearwardly-extending arm having an extension for retracting said pin, and means for operating the cam, with the vertical slide for holding said pin when retracted, the spring-controlled short rock-shaft, to which said slide is secured, provided with the horizontal and vertical arms, the rock-shaft arranged in a line to the rear of the short one, and provided with a horizontal finger at its inner end and with a trigger at its outer end, and the hand-rest, substantially as described.

12. The combination of the breech-block, formed with the firing-pin opening and the grooves communicating therewith, the firing-pin having front and rear shoulders projecting into said grooves, a suitably-supported V-shaped mainspring having its forward wing resting against said front shoulders and its rear wing against said rear shoulders, and also having bearing against a fixed part of the breech-block, and devices for retracting and releasing said firing-pin, substantially as described.

13. The combination, with the breech-block having a firing-pin opening and the grooves communicating therewith, of the firing-pin having suitable shoulders, a V-shaped mainspring having its wings bifurcated at their upper ends and extending on both sides of said firing-pin, and resting against the rear sides of said shoulders, a suitable stop or projection at the rear of said spring, fixed with respect to the breech-block, and mechanism for retracting and releasing said firing-pin, substantially as described.

In testimony whereof I affix my signature in presence of two witnesses.

WM. HALE DRIGGS.

Witnesses:
L. W. HARRIS.
E. L. WHITE.

(No Model.) 6 Sheets—Sheet 1.

T. NORDENFELT.

BREECH MECHANISM FOR GUNS.

No. 384,537. Patented June 12, 1888.

Fig. 1.

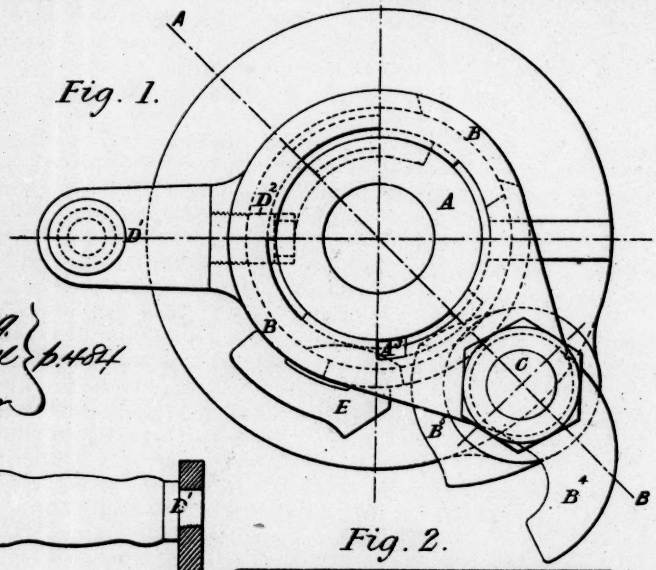

No. 569. Dashiell v. Grosvenor } p. 484

Fig. 2.

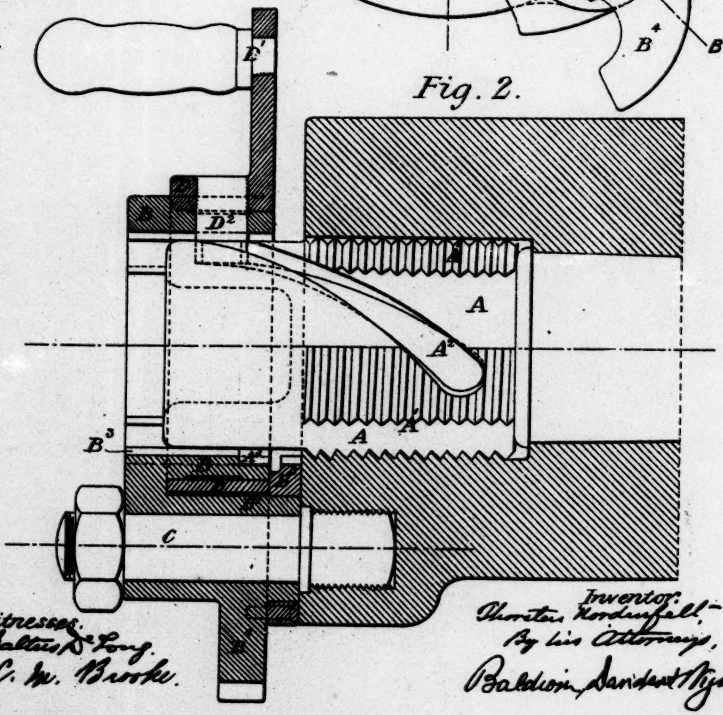

Witnesses.
Balters D. Long.
C. M. Brooke.

Inventor:
Thorsten Nordenfelt,
By his Attorneys,
Baldwin, Davidson & Wight.

(No Model.) 6 Sheets—Sheet 2.

T. NORDENFELT.

BREECH MECHANISM FOR GUNS.

No. 384,537. Patented June 12, 1888.

Fig. 3.

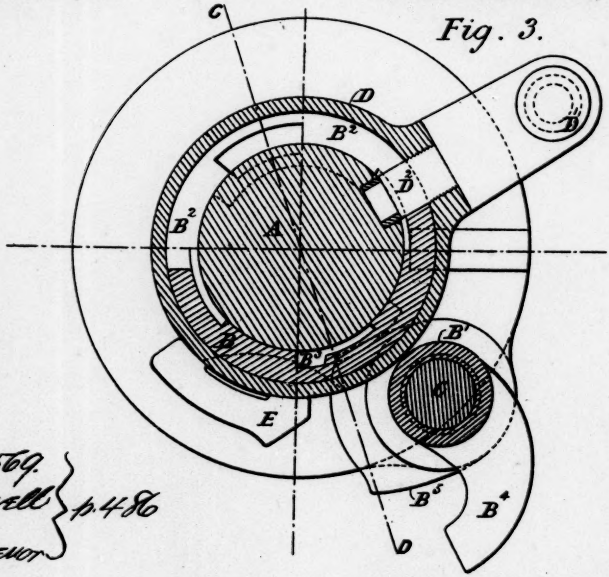

No 569.
Dashiell
v.
Grosvenor } p. 486

Fig. 4.

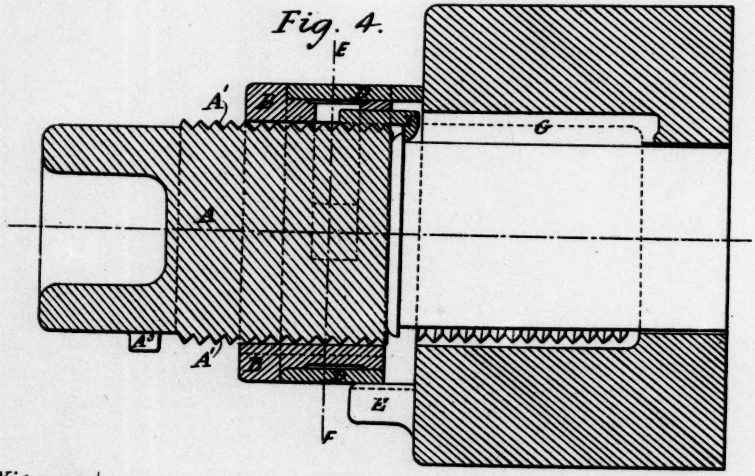

Witnesses.
Baltus & Long.
C. W. Brooks.

Inventor.
Thorsten Nordenfelt.
By his Attorneys.
Baldwin, Davidson & Wright.

(No Model.) 6 Sheets—Sheet 3.

T. NORDENFELT.

BREECH MECHANISM FOR GUNS.

No. 384,537. Patented June 12, 1888.

Fig. 5.

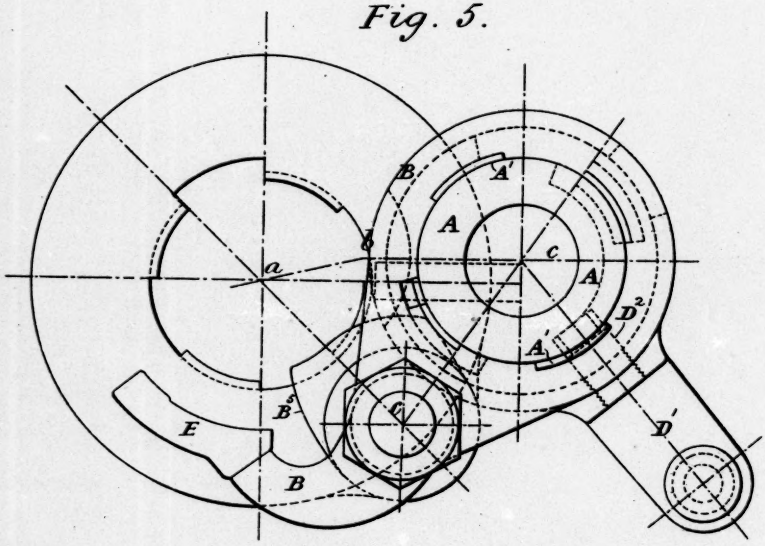

No. 469.
Dashiell
v.
Grozier
p. 488

Fig. 6.

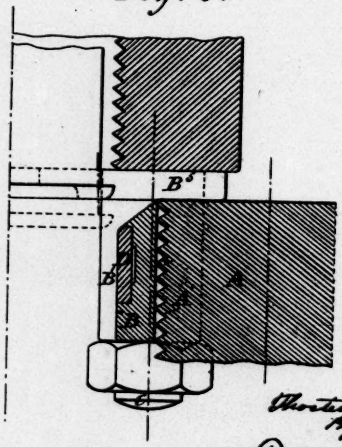

Witnesses.
Baltus & Long.
C. M. Brooke.

Inventor.
Thorsten Nordenfelt.
By his attorneys—
Baldwin, Davidson & Wright.

(No Model.) 6 Sheets—Sheet 4.

T. NORDENFELT.

BREECH MECHANISM FOR GUNS.

No. 384,537. Patented June 12, 1888.

No. 569
Oldshield
v.
Grozelier. } p 490

Fig. 7.

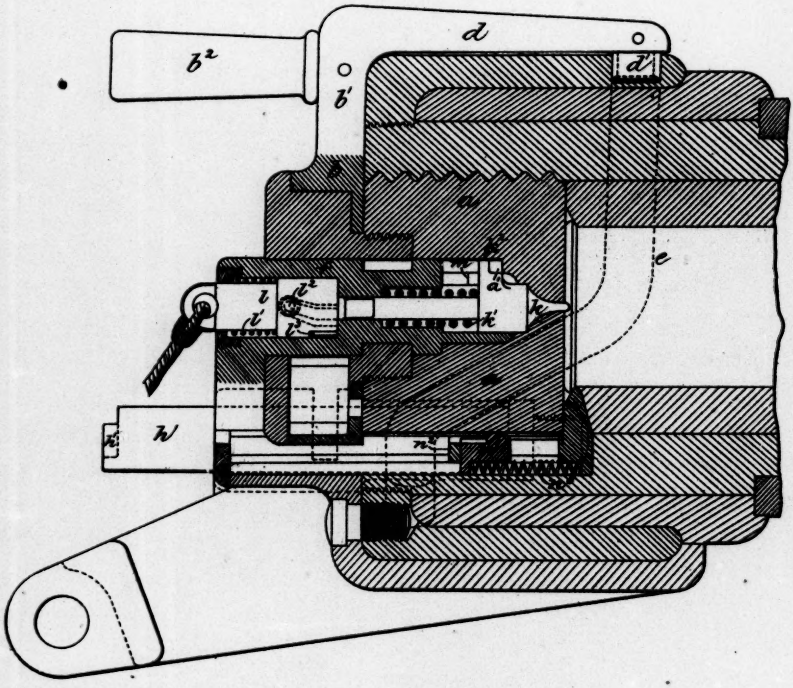

Witnesses.
Baltus & Long.
C. M. Brooke.

Inventor.
Thorsten Nordenfelt.
By his Attorneys.
Baldwin, Overdell & Wright.

(No Model.) 6 Sheets—Sheet 5.

T. NORDENFELT.

BREECH MECHANISM FOR GUNS.

No. 384,537. Patented June 12, 1888.

Fig. 8.

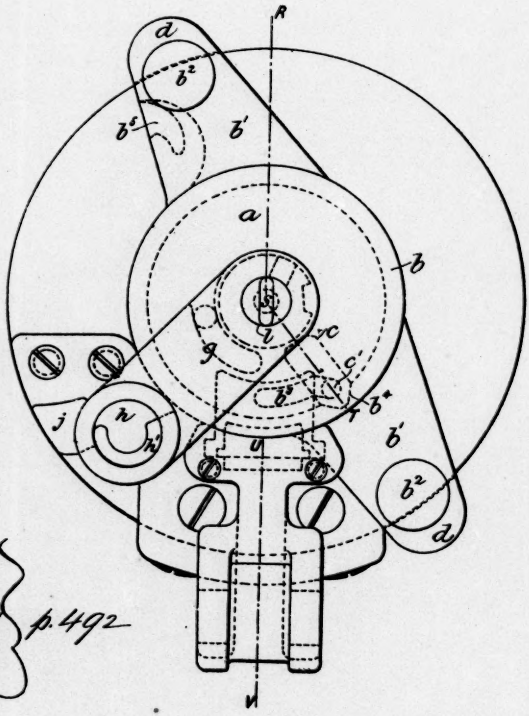

No. 569
Dashiell
v.
Grosvenor. } p. 492

Witnesses.
Baltus D. Long.
C. M. Brooke.

Inventor.
Thorsten Nordenfelt.
By his Attorneys.
Baldwin, Darby & Wight.

(No Model.) 6 Sheets—Sheet 6.

T. NORDENFELT.

BREECH MECHANISM FOR GUNS.

No. 384,537. Patented June 12, 1888.

Fig. 9.

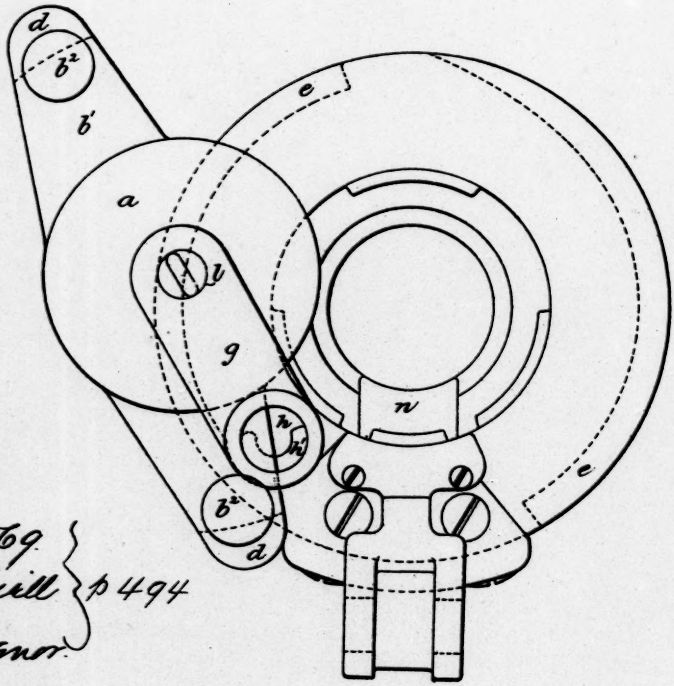

No. 569
Haskell
v.
Grosvenor
494

Witnesses.
Baltus De Long.
C. M. Brooke.

Inventor:
Thorsten Nordenfelt:
By his Attorneys.
Baldwin, Davidson & Wright.

495 UNITED STATES PATENT OFFICE.

THORSTEN NORDENFELT, of Westminster, England, assignor to the Nordenfelt Guns and Ammunition Company (Limited), of same place.

Breech Mechanism for Guns.

Specification forming part of Letters Patent No. 384,537, dated June 12, 1888. Application filed April 2, 1888. Serial No. 269,315. (No model.)

To all whom it may concern:

Be it known that I, Thorsten Nordenfelt, a subject of the King of Sweden, residing at 53 Parliament street, in the city of Westminster, England, civil engineer, have invented certain new and useful improvements in breech mechanisms for guns, of which the following is a specification.

My improvements relate to that class of breech mechanism in which the breech of a gun is closed by a block having segments of a screw-thread on its sides to lock into corresponding segments within the interior of the breech, so that to open the breech the screw-block has first to have a partial turn given to it, and then to be drawn backward.

According to my invention I, by means of one turning movement of a lever-handle which forms part of the movable breech-piece, give to such screw-block first a turning movement to disengage the screw-threads, then a backward movement to draw it back clear of the breech, and then carry it to one side to leave a clear opening into the breech end of the bore. The way in which I prefer to effect this is shown at Figs. 1, 2, 3, 4, 5, and 6 of the drawings hereunto annexed. A modified construction is shown at Figs. 7, 8, and 9.

(Here follow diagrams marked pp. 484, 486, 488, 490, 492, & 494.)

Figure 1 is a back view of the gun with the breech closed. Fig. 2 is a longitudinal section on the line A B, Fig. 1. Fig. 3 is a cross-section on the line E F after the second part of the opening movement. Fig. 4 is a longitudinal section on the line C D. Fig. 5 is a back view of the gun with the breech open, and Fig. 6 is a section on the line *a b c*. Fig. 7 is a longitudinal section of the modified construction. The section is taken on the line R S T U V, Fig. 8. Fig. 8 is a back view with the breech closed and locked, and Fig. 9 is a back view with the breech open ready to receive a fresh cartridge.

In Figs. 1, 2, 3, 4, 5, and 6, A is a screw breech-piece; A′, the segments of screw-thread on its sides to lock into corresponding screw-segments in the breech end of the gun. The breech-piece A extends backward beyond the rear end of the gun and enters loosely into a carrier-ring, B. This ring has a short arm extending from it, and a boss, B′, at the end of the arm can be turned about a pin,

C, which projects backward from the rear end of the breech of the gun.

D is a ring embracing and free to turn around the front end of the carrier-ring.

D′ is a lever-handle extending from the ring D, by which the ring can be turned.

D^2 is a pin projecting inward from the ring and passing through a slot, B^2, in the carrier-ring into a helicoidal groove, A^2, in the screw breech-piece A.

A^3 is a lug projecting from the screw breech-piece. It enters a slot cut out from the front end of the carrier-ring, and serves as a stop to prevent the breech-piece being turned too far. It can also be drawn backward along a longitudinal slot, B^3, on the inside of the carrier-ring when the screw breech-piece has been turned into a position to unlock it from the screw-segments in the gun. The interior of the carrier-ring is cut away in segments corresponding to the screw-segments of the breech-piece, so that when the breech-piece has been unlocked it may be drawn backward into it.

B^4 is an arm extending from the boss B′ of the arm which carries the carrier-ring. When the boss is turned around the pin C, it comes against a fixed projection, E, on the breech end of the gun, and the extent to which it can be turned is thereby limited.

B^5 is a stop-plate fixed to the front end of the boss, B, and which, when the breech-piece has been drawn back and an empty cartridge-case with it, comes in front of the flange of the cartridge as soon as the carrier is turned to one side, and prevents the empty cartridge-case from being pushed back into the gun. The extractor is formed of a slide, F, having a hook at its front end to hook over the rim at the rear end of the cartridge-case and capable of being moved along a slot, G, in the gun, which is a deepening of one of the grooves cut away between the segments of screw-threads in the gun. On the inner face of the slide are teeth to engage with the screw-threads on the screw breech-piece.

The action of the mechanism is as follows: To open the breech, the ring D has a partial turn given to it by its lever-handle D′.

The pin D^2, which is then at one end of the helicoidal groove,
496 A^2, tends either to turn the screw-breech A or to draw it back; but as the screw-threads upon the screw breech-piece are interlocking with the screw-threads in the gun it cannot be drawn back, and therefore it is turned until the screw-segments upon its side are disengaged from the corresponding screw-segments in the gun. The lug A^3 then comes to the end of the slot, cut away from the front end of the carrier-ring, and comes opposite to the end of the longitudinal slot B^3 in the ring. Therefore, as the outer ring, D, continues to be turned, and as the screw-breech is now prevented from turning, but free to be drawn back, it is drawn back into the carrier-ring. When the lug A^3 by the backward movement of the breech-piece has passed out from the rear end of the carrier-ring, the screw breech-piece is still prevented from turning by reason of the screw-segments upon it lying in corresponding grooves formed longitudinally on the inside of the carrier-ring. When the pin arrives

at the end of the helicoidal groove in the screw breech-piece, and the screw breech-piece consequently cannot be drawn back any farther, its front end has been drawn back from the bore of the gun and the extractor, which comes back with it, has also been drawn back clear of the gun; and as the turning movement of the handle D′ is continued, the carrier-ring, being now no longer restrained from being turned around the pin C, is turned around this pin and carries the breech-piece to one side, leaving the rear end of the gun open. The arm B^4 then comes against the fixed stop E, which prevents all further movement of the carrier-ring. The extractor on the commencement of the opening of the breech is first drawn back slowly a short distance by the action of the screw-threads on the breech-piece, and consequently has great power to start back the cartridge-case. When the breech-piece is drawn backward, (the teeth on the extractor being still interlocked with the screw-segment on the breech-piece,) the extractor is drawn back with it and carried back into a groove in the carrier-ring, as shown at Fig. 4. Immediately after it has been drawn back into this position and the carrier-ring is turned to one side the stop-plate B^5, fixed on the boss, comes in front of the flange of the extracted cartridge-case. The cartridge-case is then removed by hand and a fresh one inserted in its place, the stop-plate B^5 preventing this cartridge from being inserted too far and arresting it in proper position for the front end of the breech-piece to come into position in rear of it and the hook of the extractor to come in front of the rim on its base when the breech is being again closed. The edge of the carrier-ring which first comes against the rear end of the cartridge-case at the time when the breech is being closed may be somewhat beveled off, so that should the cartridge have rebounded somewhat from the stop-plate B^5, or not have been pushed home to it, this beveled edge may push the cartridge forward up to the stop-plate and allow the breech-screw to be brought into position behind it. The closing of the breech is effected by turning the handle D′ in the opposite direction to that required for opening it.

I will now describe the modified construction shown at Figs. 7, 8, and 9. In this modification, in place of the groove A^2 on the exterior of the screw breech-piece there is a groove on the exterior of the gun to effect the same object. In other respects, also, the construction is modified.

In Figs. 7, 8, and 9, *a* is the screw breech-piece. *b* is a ring capable of turning around its rear end.

b′ are radial arms extending from it, and provided with handles b^2, by which the ring can be turned.

c is a radial bolt, by which the screw and ring are at times locked together. It lies in a radial recess in the part *a*. Its outer end is V-shaped and enters a corresponding notch, b^4, in the ring *b*. When the bolt is restrained from moving inward, the screw and ring are locked together; but when the bolt is moved inward the screw is unlocked from the ring, so that the ring can turn around the screw without the screw being turned.

d d are arms extending forward from the radial arms *b'* along two opposite sides of the breech end of the gun.

d' are rollers at their ends, which enter grooves *e e*, formed in the sides of the gun. The central part of this groove is, as shown by dotted lines in Fig. 1, made inclined to the bore.

f is a pin or axis upon which the breech-piece *a* turns. It is fixed to an arm, *g*, which can turn upon and also slide back along a fixed stud, *h*, which projects from the rear end of the gun. The rear extremity, *h'*, of the stud *h* is made to the form of a segment of a ring which is concentric with the stud.

b^5 is a groove in the front face of one of the radial arms, which passes onto and embraces this segment end after the screw breech-piece has been unlocked and drawn back. So soon as the groove b^5 engages with the annular segment *h'*, the ring *b* turns around the stub *h* until the screw *a* is supported by the stop *j*, which stands out from the rear end of the breech of the gun. The parts are then in the position shown in Fig. 3.

In opening the breech the screw *a* and ring *b* are first locked together by the radial bolt *c*, as the inner end of the bolt then abuts against the axis *f*. Consequently when the ring is turned both the ring and the screw turn together until the inner end of the bolt *c* comes opposite to and is made to enter a recess in the axis *f*, and is thereby disengaged from the ring, leaving the ring free to continue turning without turning the screw. The endwise movement is given to the bolt by a pin, *c'*, upon it, which enters the inclined end of a slot, b^3, in the ring. The incline of the slot is therefore always tending to press the bolt inward. As the ring continues its
497 turning movement, the rollers *d'* at the extremity of the arms *d* now enter the parts of the groove *e*, which are inclined to the central line of the bore, and the screw is drawn back until the rollers come into the end portions of the grooves, which are not inclined. The radial arm *b'* then engages with the stud *h*, and a pin, *i*, on the ring having now been brought to the end of a slot in the arm *g*, the ring *b*, with its arms *b'* and arm *g*, all turn around the stud *h* as a fulcrum, and the breech-screw is carried to one side of the rear end of the breech and left resting upon the support *j*. When the lever is turned back in the opposite direction, the movements are reversed and the breech is closed. The lock mechanism is contained within the pin *f*, on which the breech-screw *a* turns. The arrangements for setting back the hammer or striker to its "cocked" position are as follows:

k is the hammer or striker thrown forward by the spring *k'*.

l is the trigger in a line with and in rear of it. This trigger is also pressed forward by a spring, *l'*. When pressed forward by the spring, it has also a partial rotation given to it by a pin, l^2, fixed to the axis *f*, entering an inclined groove formed around its circumference. In its front end is a recess, l^3, into which the rear end of the stem of the striker can be made to enter when it is brought into a line with it. When a turning movement is given to the breech-screw to unlock it, an incline, *a'*, on the breech-screw, acting upon a lug, k^2, projecting from the hammer, forces the hammer back, and

then gives to it a partial turn. A lug projecting from the hammer is thereby brought in rear of a stop, *m*, carried by the axis *f* and the hammer is held back. As the hammer is being pressed back, as above mentioned, it presses back the trigger also, and as the trigger is moved back it also has a partial turn given to it in the manner above mentioned, and at the end of its backward movement the slot l^3 in its front end is brought into such a position that the rear end of the stem of the hammer can enter into it, and when the hammer has a partial turn given to it at the end of its backward movement the trigger-block, being pressed forward by its spring, turns with it and passes onto the rear end of the stem. To release the hammer, the trigger-block has to be pulled backward by a cord. When drawn back, it turns the hammer in the opposite direction to that above mentioned, and so sets its free to be thrown forward by its spring.

n is the extractor. It slides in a longitudinal groove in the rear end of the gun. It carries a tooth, *n'*, with which one of the screw-threads of the breech-screw engages when the breech-screw is turned. When the screw is turned to open the breech, a slight backward movement is thereby given to the extractor, and the empty cartridge-case is started back from the rear end of the bore of the gun. When the breech-screw is drawn back, the extractor carries the cartridge-case backward along with it. When at the end of the backward movement of the breech-screw, the breech-screw is turned to one side, the threads of the screw become disengaged from the tooth *n'* of the extractor.

When a new cartridge is placed into the gun, its flange carries the extractor forward along with it. When the breech-screw has been moved forward to close the breech and has a partial turn given to it to lock it, the cartridge is pressed home and carries the extractor along with it. One of the screw-threads of the breech-screw also engages with the tooth *n'* of the extractor and presses it forward. In order that it may at this time be free to move forward, the tooth is carried by a small slide, n^2, which is free to move to and fro along the extractor-stem, but is pressed backward by a spring, n^3. When the screw has been turned to its locked position, the screw-thread becomes disengaged from the tooth *n'*, and the spring n^3 presses the slide n^2 back against part of the extractor-stem, so that when the breech-screw is again turned to open the breech and the screw again engages with the tooth *n'* the extractor is at once drawn back by it.

What I claim is—

1. Breech mechanism for guns having a screw breech-piece with divided segments of screw-threads upon it, corresponding segments in the gun for these segments to lock into, a ring capable of being turned around the rear end of such breech-piece, a lever-handle extending from the ring by which it can be turned, a pin or pins carried by the ring to enter inclined grooves, so disposed that when the ring is turned by its lever-handle it first gives a partial turn to the breech-piece to unlock it, and then draws the breech-piece back clear of the rear end of the gun, and a pin projecting from the rear end of the gun, around which the ring is then turned by the continued

movement of its lever-handle, and the breech-piece thereby carried to one side and out of line with the bore of the gun.

2. The combination of a gun having divided segments of screw-threads within its breech end, a breech-piece having corresponding segments to lock into them, and also having an inclined groove passing partly around it, a carrier-ring into which the rear end of the breech-piece extends, a short arm extending from the ring and capable of being turned around a pin projecting rearward from the breech end of the gun, a ring with lever-handle extending from it capable of being turned around the carrier-ring, and a pin projecting inward from the ring and entering the inclined groove in the breech-piece, the whole so disposed that on the ring being turned in one direction the breech-piece has first a partial turn given to it, is then drawn back, and then by the continued movement of its lever-handle carried to one side of the gun.

498 3. The combination of a gun having divided screw-segments within its breech, a breech-piece with corresponding screw-segments, a carrier-ring into which the rear end of the breech-piece extends, a short arm extending from the ring, a pin projecting rearward from the breech end of the gun, around which the arm can be turned, an extractor sliding in a longitudinal groove in the gun and having teeth upon it to engage with the screw-threads on the breech-piece, and a longitudinal groove in the carrier-ring, into which the extractor is drawn when the breech-piece is drawn back from the gun.

THORSTEN NORDENFELT.

Witnesses:
W. DUTNELL.
F. A. NOEL.

507 UNITED STATES PATENT OFFICE.

ROBERT BLOOKE DASHIELL, of Washington, District of Columbia.

Breech-loading Ordnance.

Specification forming part of Letters Patent No. 468,331, dated February 9, 1892. Application filed November 4, 1890. Serial No. 370,319. (No model.)

To all whom it may concern:

Be it known that I, Robert Brooke Dashiell, ensign, United States Navy, a citizen of the United States, residing at Washington, in the District of Columbia, have invented certain new and useful improvements in breech-loading ordnance; and I do hereby declare the following to be a full, clear, and exact description of the invention, such as will enable others skilled in the art to which it appertains to make and use the same.

My invention relates, generally, to breech-loading ordnance, and particularly to that type thereof in which is used a breech block or plug; which is formed with exterior, interrupted, or mutilated screw-threads; which fits into a correspondingly screw-threaded opening or seat in the breech of a gun; which is withdrawn therefrom in a rearward and horizontal direction, and which is operated in connection with a swinging carrier or tray which is pivoted to one side of the breech of the gun and which acts as a guide in inserting the breech-plug into and removing it from its opening or seat and as a support for the same when it is withdrawn from the gun; and my invention also especially relates to that type of ordnance in which three movements are made for opening the breech, the first being the partial turning of the breech-plug for unlocking the same, the second the withdrawing of said plug backward and upon said tray, and the third the swinging aside of the tray with said plug thereon; and my invention consists in the peculiarities of construction and arrangement or combination of parts hereinafter fully disclosed in the description, drawings, and claims.

The objects of my invention are, first, to provide improvements in the breech mechanism of such guns, whereby they can be worked, loaded, and fired more rapidly than usual, the several movements of the breech-plug being effected in succession by the continuous swinging of a single hand-lever, by the movements of which in two opposite directions the breech of the gun can be completely opened and closed; second, to provide an improved firing attachment, which, during the closing of the breech, is automatically cocked or made ready for the next discharge, whereby the gun can be fired with safety the instant the breech is closed, and, third, to so construct said firing attachment and combine the same with the breech-plug that the explosion of the charge previous to the locking of said plug in place will be impossible. These objects are accomplished by the peculiarly constructed and arranged mechanisms illustrated

in the accompanying drawings, forming part of this specification, in which the same reference-numerals indicate the same parts, and in which—

(Here follow diagrams marked pp. 500, 502, 504, & 506.)

Figure 1 represents a rear view of the breech of a breech-loading gun constructed in accordance with my invention, the breech being closed; Fig. 2, a broken top plan view of the same, partly in section; Fig. 3, a rear view of the same, the breech-plug being withdrawn or released from its seat and resting upon the tray; Fig. 4, a top plan view of the same; Fig. 5, a detail bottom plan view of the breech-plug; Fig. 6, a side view of the gun-breech, showing the tray and the plug thereon moved to the right to their full extent, or about ninety-degrees; Fig. 7, a left side view of the gun-breech, showing the operating mechanism closed; Fig. 8, a right side view of the same; Fig. 9, a vertical section on the line *x x* on Fig. 3; Fig. 10, a section on the line *y z* on Fig. 1; Fig. 11, a section on the line *y x* on Fig. 1; Fig. 12, a view the same as that in Fig. 10, except that the latter shows the gun fired, while the former shows it ready for firing, or with the firing-pin cocked; and Fig. 13 a detail perspective view of the horizontally and vertically clogged rack-bar.

In the drawings, the numeral 1 indicates the body of the gun; 2, the breech block or plug, which is formed with exterior mutilated screw-threads and fits into a correspondingly screw-threaded interior opening or seat formed in the breech of the gun, and 3 the carrier or tray for supporting said breech-plug after it has been removed from its seat in the breech. This tray is provided with the collar 4, which rises from its front edge and is formed on one side with the vertical extension 5, having the socketed lugs or bearings 6 at its upper and lower ends, which project forwardly and fit loosely within the recesses 7, formed in the rear surface of the breech, as more plainly illustrated in Fig. 8. Through these lugs or bearings and the intermediate socketed part 8 of the breech is passed
508 the vertical bolt or pin 9, upon which the tray is pivoted or hinged. This collar not only strengthens said tray, but has the other peculiarities of construction hereinafter described. Near the front edge of the tray and upon its under side it is provided with the pivoted and spring-pressed double-toothed latch 10, which is automatically disengaged from and engaged with the catch-pin 11 by the action of the breech-plug 2, which occurs during the completion of its outward and the commencement of its inward movement from and into its seat in the breech, the purpose of said latch and catch-pin being to hold said trry to and release it from the breech; also the rear tooth 12 of said latch, which projects up through a hole in said tray, assists in holding the breech-plug fast upon the latter after they have been released from the breech, and also upon the upper side of said tray are formed the ribs or guides 13, which are adapted to enter corresponding grooves formed in said breech-plug after the latter has been turned to its unlocked position and moved out upon said tray.

(No Model.) 4 Sheets—Sheet 1.

R. B. DASHIELL.

BREECH LOADING ORDNANCE.

No. 468,331. Patented Feb. 9, 1892.

No. 569
Dashiell
v.
Grosvenor
$500

Fig. 1.

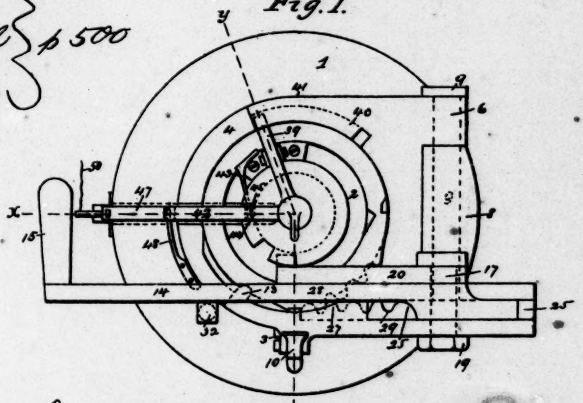

Fig. 2.

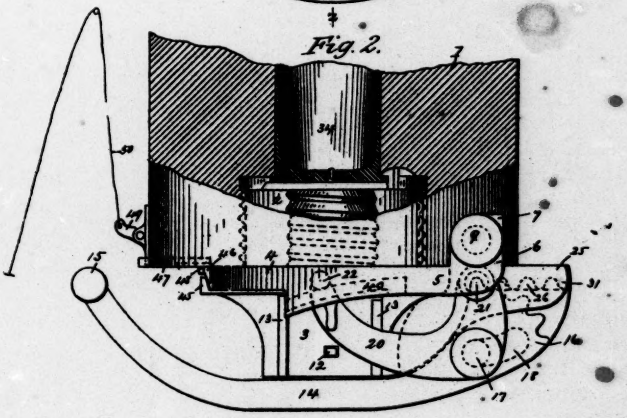

Witnesses:
T. R. Stuart.
J. M. Fowler Jr.

Inventor:
R. B. Dashiell.

By Marble, Mason & Canfield,
Attorneys.

(No Model.) 4 Sheets—Sheet 2.

R. B. DASHIELL.

BREECH LOADING ORDNANCE.

No. 468,331. Patented Feb. 9, 1892.

No 569
Dashiell } p 502
v.
Grosvenor

Fig. 3.

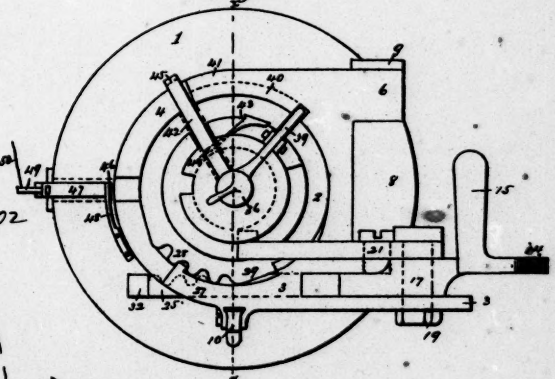

Fig. 4.

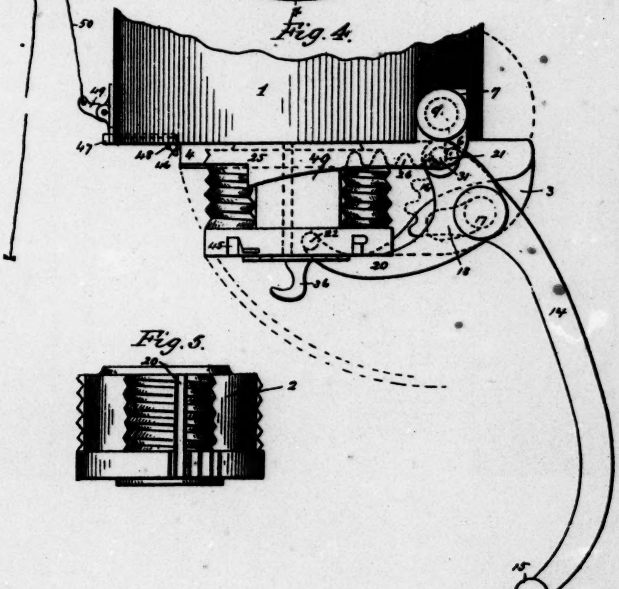

Fig. 5.

Witnesses:
F. K. Stuart.
J. M. Crawford

Inventor:
R. B. Dashiell.
By Marble, Mateer & Campfield,
Attorneys.

(No Model.) 4 Sheets—Sheet 3.

R. B. DASHIELL.

BREECH LOADING ORDNANCE.

No. 468,331. Patented Feb. 9, 1892.

No. 569 Dashiell p. 504 Guarantee

Fig. 6.

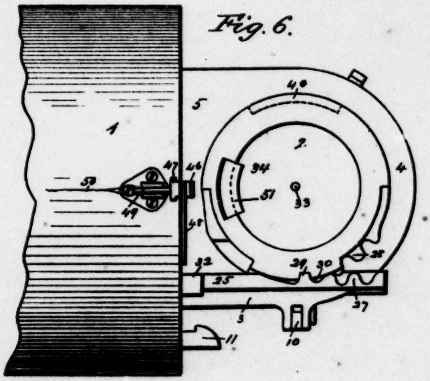

Fig. 7.

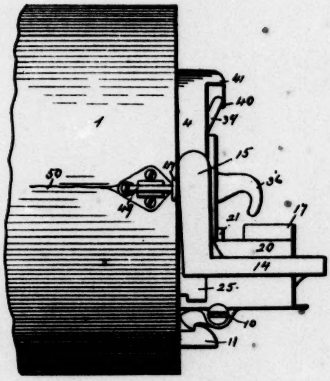

Fig. 8.

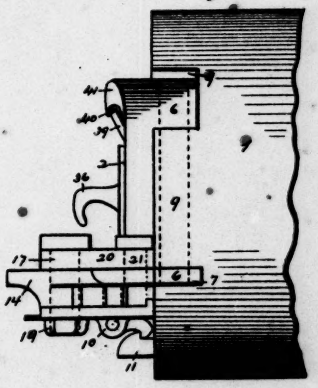

Witnesses:
T. R. Stuart.
J. M. Clarke Jr.

Inventor:
R. B. Dashiell.

By Marble, Mann & Canfield,
Attorneys.

(No Model.) 4 Sheets—Sheet 4.

R. B. DASHIELL.

BREECH LOADING ORDNANCE.

No. 468,331. Patented Feb. 9, 1892.

Fig. 9.

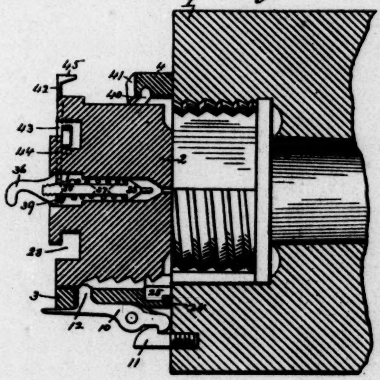

Fig. 10.

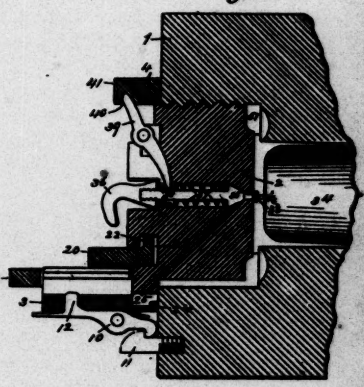

No 569. Darwill v. Governor } p. 506

Fig. 13.

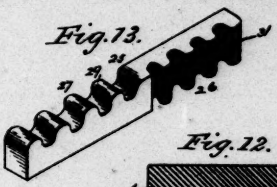

Fig. 11.

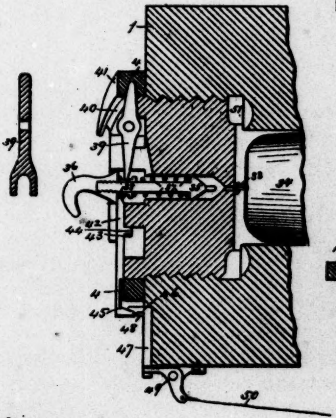

Fig. 12.

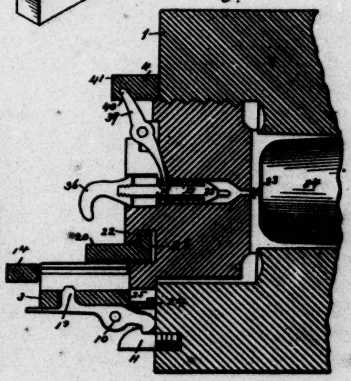

Witnesses:
T. R. Stuart.
J. M. Fowler Jr.

Inventor:
R. B. Dashiell.
By Marble, Mason & Canfield,
Attorneys.

The mechanism which I have invented and employ for withdrawing the breech-plug from and returning the same into its seat in the breech is the following: The hand-lever 14 is horizontally arranged, supported upon the tray 3, and provided at one end with the handle 15 and at the other end with the circular cogged segment 16; also, it is pivoted upon the bolt or pin 17, which passes down through the curved slot 18 formed in said tray and forms the fulcrum upon which said lever is turned. This pin is kept from rising by the nut 19 upon its lower end, while said curved slot permits it and said lever to be moved in either direction desired; also, said pin passes through a hole in the elbow of the bell-crank lever 20, the end of the short or outer arm of which is pivoted upon the tray by the screw-pin 21, while the end of its long or inner arm is formed with the vertical toe or stud 22, which is fitted into the circular undercut groove 23, formed in the periphery of the breech-plug near its rear end, as shown most plainly in Figs. 10 and 12. Along the front part of the tray is formed the channel or guideway 24, in which the cogged rack-bar 25 is slid back and forth, and which is formed along its right portion with the series of horizontal cogs 26 and along its left portion with the series of vertical cogs 27. The former cogs mesh or gear with the cogged segment 16 on the end of the hand-lever 14, while the latter gear with the series of cogs 28 on the periphery of the rear end of the breech-plug 2. For limiting the travel of the rack-bar 25 across the face of the breech and presenting the plug at the proper point for delivery upon the tray the stop-pin 32 is secured to the rear end of said breech in alignment with the left end of said rack-bar; also, this stop-pin converts the right end of said rack-bar into a fulcrum for the cogged segment 16 of the hand-lever to revolve upon, and thus by means of the bolt or pin 17 to move the long arm of the bell-crank lever rearwardly for withdrawing the breech-plug and placing the same upon the tray. The first cog 29 at the right end of the vertical series of cogs 27 on said rack-bar is arranged in alignment with the longitudinal groove 30, formed in the lower screw-threaded section of said breech-plug, as shown in Fig. 5, when the latter has been turned to its unlocked position, so that it can pass over said cog and be moved out of its seat and upon the tray; also, this cog remains engaged in said groove as long as the plug rests upon the tray, and thus it prevents endwise movement of the rack-bar until the plug has been moved from the ribs or guides 13 on the tray and placed in its seat or until it is in proper position to be turned by the rack-bar and locked. The first cog 31 at the right end of the horizontal series of cogs 26 on the rack-bar forms the fulcrum upon which the hand-lever turns when the bolt or pin 17 moves the bell-crank lever 20 forwardly for forcing the breech-plug into its seat.

In addition to what is evident in the operation of the mechanism thus far described it may be further stated that when it is desired to open the breech of the gun and the breech-plug 2 is locked in its seat or in the position represented in Fig. 1 the hand-lever 14 is turned around to the rear and right, this movement being effected upon the bolt or pin 17 as a center, as said pin is held in the bell-

crank lever 20 and passes down through the curved slot 18 in the tray 3. As the end of the short or outer arm of this bell-crank lever is pivoted upon the screw-pin 21, which is fastened in said tray, and as the long or inner arm of said lever is formed with the vertical toe or stud 22, which projects upwardly and into the undercut groove 23 in the breech-plug, it is obvious that by turning said hand-lever and its cogged segment 16 to the right the latter will engage the horizontal cogs 26 of the rack-bar 25 and slide the same to the left, that the vertical cogs 27 of said rack-bar will simultaneously engage the cogs 28 of the breech-plug 2 and turn the same one-sixth of a revolution from left to right, and that when this revolution is completed further movement of said rack-bar to the left will be prevented by the contact of its left end with the stop-pin 32. The revolution of the hand-lever on the bolt or pin 17 as a center ceases at this point and is transferred to the first horizontal cog 31 on the right end of the rack-bar as a center or fulcrum. As the center of this cog is so arranged as to be in a vertical line with the axis of the screw-pin 21 when the left end of said rack-bar is held against the stop-pin 32, a continued pull upon said hand-lever around to the right will cause it to swing on said axis as a center, and by means of the bolt or pin 17, which passes through the bell-crank lever 20, the latter will also swing rearwardly on said screw-pin as a center and withdraw the breech-plug to the rear and
509 out upon the tray. The bolt 17 during this motion passes along the curved slot 18 to its right end. At the completion of the motion which withdraws the breech-plug its rear and lower end will strike against and depress the vertical rear tooth 12 of the latch 10, and thus release the tray from the breech of the gun. When the parts named are in these positions, the breech-plug and tray are in proper condition for being swung on the hinge bolt or pin 9 to the rear and right for opening the breech of the gun.

After the tray and breech-plug have been moved to their greatest extent to the right, or into the position shown in Fig. 6, and it is desired to close the breech of the gun, the hand-lever will be first turned to the left, or to the position shown in Fig. 4, so that said tray and breech-plug will be returned to the breech and said tray automatically fastened thereto by the catch-pin 11 and the double-toothed and spring-pressed latch 10, the rear tooth 12 of the latter acting to simultaneously unfasten said plug from the tray. Then in order to effect the return of the breech-plug to its seat, a continued turning of said hand-lever 14 to the left will cause it to revolve again on the vertical line passing through the center of the first horizontal cog 31 on the right end of the rack-bar 25, because, as before described, said rack-bar is held in its proper place in the tray by reason of the engagement of the first or right vertical cog 29 on said rack-bar with the longitudinal groove 30 in the lower part of the breech-plug. Then further turning of the hand-lever on said center will cause the bell-crank lever 20 to swing forward on the screw-pin 21, and thus cause the breech-plug to be thrust into its seat, and also during this movement the bolt 17 will have been moved to the left end of the curved slot 18, and the breech-

plug, being off the ribs or guides 13 and in its seat in the breech, will have its cogged portion in mesh with the vertical cogs 27 on the rack-bar. Then and finally the hand-lever is moved farther to the left, turning on the bolt 17 as a center, when the breech-plug will be turned one-sixth of a revolution to the right and locked in its seat in the breech by the mutilated screw-threads thereon and therein, the positions of the parts at this time being represented in Figs. 1, 2, 7, and 8.

As the improvements thus described are intended and designed for employment in connection with rapid-firing breech-loading ordnance, in which is preferably used fixed ammunition having the percussion-cap 33 in the base of the cartridge 34, I have constructed and combined therewith an improved firing attachment, of which the following is a description: The breech-plug is centrally bored to receive the firing-pin 35, which is provided at its rear end with the shouldered hook 36 and around which is placed the spiral spring 37 and the grooved sleeve 38, with which latter engages the lower forked end of the cocking-lever 39, which is pivoted to the rear face of the breech-plug and which, when the latter is in its seat in the gun, has its upper end engaged in the curved or cam groove 40, which is formed in the projection 41 on the upper portion of the collar 4 and extends for one-sixth of the circumference of the latter. The lower end of this cocking-lever will be moved forward or backward in accordance with the position of its upper end in said cam-groove. The firing-pin 35 is held in its cocked position by the inner point of the horizontally-arranged sear 42 and by the spring 43 pressing against the stud 44 on the front side of said sear. The other or outer end of this sear is formed with the toe 45 for engaging the toe 46 of the trigger 47, against the rear side of which bears the spring 48. To the left side of the body of the gun is attached the small bell-crank lever 49, the end of its inner arm being connected to the outer end of the trigger 47, while to the end of its other arm is connected the lanyard 50, which I prefer to have lead forward to pass around a pulley located on the gun near its trunnions, and to thence return within convenient reach of the gun-servant, so that it may be out of the way of the operator of the breech-plug-actuating mechanism. One or more ordinary or suitable extractors 51 are secured to the front end of the plug for effecting the withdrawal of empty cartridge shells or cases from the gun.

The operation of my improved firing attachment is as follows: After firing, or when the parts are in the position shown in Fig. 10, and when the breech of the gun is to be opened, as previously described, the rotation of the breech-plug to the right by the left trend of the mutilated screw-threads of said plug in its seat will cause the upper end of the cocking-lever 39 to move along in the inclined circular cam-groove 40, which is formed, as stated, in the projection 41 of the collar 4, as shown in dotted and full lines in the drawings. This movement of the upper end of said cocking-lever will cause its lower forked end to move the grooved sleeve 38 and the firing-pin 35 to the rear until the vertical surface of the rear shoulder of the latter becomes seated or cocked upon the inner point of

the horizontally-arranged sear 42. During this unlocking movement the inclination or taper of the rear shoulder of said firing-pin will cause the sear 42 to move outwardly until its inner point reaches the vertical surface of said shoulder, when the spring 43 will throw said sear inwardly or in front of said shoulder and hold said firing-pin cocked. All of these parts and their described adjuncts will remain in these positions until the breech-plug has been placed in the breech and it has commenced to be turned for locking it in its seat. Then as said plug is rotated the upper end of the cocking-lever will move back in the cam-groove, slide the grooved sleeve forward on the firing pin, and compress the spiral spring to its full extent. In the meantime the sear-toe 45 will come into engagement with the trigger-toe 46, when the gun will be ready for firing. All of this is done quickly and automatically, and it only remains to pull the lanyard 50 for withdrawing the point of the sear 42 from the front of the shouldered hook 36 to effect the firing of the gun. Also, as is evident, my improved firing attachment possesses unusual safety, as it is impossible to fire the gun until the trigger 47 and the sear 42 become engaged or until the spiral spring 37 has been compressed, neither of which can take place until the breech-plug has been locked in its seat.

Having thus fully described the construction and arrangement or combination of the several parts of my invention, its advantages, and operation, what I claim as new is—

1. In ordnance in which the seat in the breech and the breech-plug are formed with correspondingly-mutilated screw-threads and in which said breech-plug is first withdrawn rearwardly and then swung horizontally, the combination, with a breech-seat and a breech-plug thus constructed, the latter being provided with a series of cogs on its periphery at its rear end, of a pivoted tray, a movable rack-bar connected thereto and formed with a vertical and a horizontal series of cogs, the former series engaging with the series of cogs on said breech-plug, and a hand-lever formed with cogs which directly engage with and operate said cogged rack-bar, substantially as and for the purpose described.

2. In ordnance in which the seat in the breech and the breech-plug are formed with correspondingly-mutilated screw-threads and in which said breech-plug is first withdrawn rearwardly and then swung horizontally, the combination, with a breech-seat and a breech-plug thus constructed, the latter being provided with a series of cogs at its rear end and on the lower side of its periphery, of a pivoted tray, a movable rack-bar connected thereto and arranged on a plane below said plug and formed with a vertical and a horizontal series of cogs, the former series engaging with the series of cogs on said breech-plug, and a hand-lever formed at one end with a cogged segment which directly meshes with the horizontal series of cogs on said rack-bar and moves the same longitudinally, substantially as and for the purpose described.

3. In ordnance in which the seat in the breech and the breech-plug are formed with correspondingly-mutilated screw-threads and in which said breech-plug is first withdrawn rearwardly and then

swung horizontally, the combination, with a breech-seat and a breech-plug thus constructed, the latter being provided with a series of cogs on its periphery at its rear end and with a longitudinal groove in the lower section of its screw-thread, of a pivoted tray, a movable rack-bar thereon which is arranged on a plane below said plug and formed with a vertical and a horizontal series of cogs, the former series engaging with the series of cogs on said breech-plug, and a hand-lever formed at one end with a cogged segment which directly meshes with the horizontal series of cogs on said rack-bar and moves the same longitudinally, substantially as and for the purpose described.

4. In breech-loading ordnance of the character described, the combination, with the breech of a gun formed with recesses in one side of its rear surface and with an intermediate socketed portion, of a tray formed with a collar having upper and lower socketed lugs or bearings which are seated within said recesses and a vertical bolt or pin upon which said tray is pivoted, substantially as described.

5. In breech-loading ordnance of the character described, the combination, with the breech of a gun formed with recesses in one side of its rear surface and with an intermediate socketed portion, of a tray formed with a collar having upper and lower socketed lugs or bearings which are seated within said recesses, a vertical bolt or pin upon which said tray is pivoted, means for locking said tray to and unlocking it from said breech, a breech-plug, and means for sliding the same upon and from said tray, substantially as described.

6. In breech-loading ordnance of the character described, the combination, with the breech of a gun, a breech-plug provided with a series of cogs on the periphery of its rear end, a pivoted tray, and a cogged rack-bar thereon, the latter being connected with the series of cogs on said plug, of a hand-lever formed with cogs for operating said rack-bar, and a bell-crank lever connected to said hand-lever and a plug for moving the latter onto and from said tray, substantially as described.

7. In breech-loading ordnance of the character described, the combination, with the breech of a gun, a breech-plug provided with a series of cogs on the periphery of its rear end and formed with a circular under-cut groove, a pivoted tray formed with a guideway along its front edge, and a movable rack-bar fitted in said guideway and formed with a vertical and a horizontal series of cogs, the former series engaging with the series of cogs on said breech-plug, of a hand-lever formed at one end with a cogged segment for operating said rack-bar, and a bell-crank lever connected to said hand-lever, pivoted at one end to said tray and provided at its other end with a vertical toe or stud which projects up into said under-cut groove in the breech-plug, substantially as and for the purpose described.

8. In breech-loading ordnance of the character described, the combination, with the breech of a gun, a breech-plug provided with a series of cogs on the periphery of its rear end and formed with a cir-

cular under-cut groove, a pivoted tray formed with a curved slot and also with a guideway along its front edge, and a movable rack-bar fitted in said guideway and formed with a vertical and a hori-
511 & 512 zontal series of cogs, the former series engaging with the series of cogs on said breech-plug, of a hand-lever formed at one end with a cogged segment for operating said rack-bar, a pivot-pin passing through said curved slot and connecting said tray and hand-lever, and a bell-crank lever which is connected to said pivot-pin and hand-lever, pivoted at one end to said tray and provided at its other end with a vertical toe or stud which projects up into the under-cut groove formed in said breech-plug, substantially as described.

9. In breech-loading ordnance of the character described, the combination, with the centrally-bored breech-plug and a firing-pin arranged therein and provided with a shoulder near its rear end and with a spiral spring and a grooved sleeve, both being arranged in front of said shoulder, of a pivoted cocking-lever engaging said grooved sleeve, means for moving the lower end of said lever forward or backward, a horizontal sear having its inner end or point arranged to be engaged with or disengaged from said shoulder, and means for operating said sear, substantially as described.

10. In breech-loading ordnance of the character described, the combination, with the centrally-bored breech-plug and a firing-pin arranged therein and provided with a shoulder near its rear end and with a spiral spring and a grooved sleeve, both being arranged in front of said shoulder, of a pivoted cocking-lever having a forked lower end engaging said grooved sleeve, a revoluble surface formed with a cam-groove for engaging the upper end of said lever and moving the lower end thereof forward or backward, a horizontal sear having its inner end or point arranged to be engaged with or disengaged from said shoulder, and means for operating said sear, substantially as described.

11. In breech-loading ordnance of the character described, the combination, with the centrally-bored breech-plug and a firing-pin arranged therein and provided with a shoulder near its rear end and with a spiral spring and a grooved sleeve, both being arranged in front of said shoulder, of a pivoted cocking-lever having a forked lower end engaging said grooved sleeve, a pivoted tray provided with a collar having a projection upon its upper portion which is formed with a cam-groove for engaging the upper end of said lever and moving the lower end thereof forward or backward, a horizontal sear having its inner end or point arranged to be engaged with or disengaged from said shoulder, and means for operating said sear, substantially as described.

12. In breech-loading ordnance of the character described, the combination, with the centrally-bored breech-plug and a firing-pin arranged therein and provided with a shoulder near its rear end and with a spiral spring and a grooved sleeve, both being arranged in front of said shoulder, of a pivoted cocking-lever having a forked lower end engaging said grooved sleeve, a pivoted tray provided with a collar having a projection upon its upper portion which is

formed with a cam-groove for engaging the upper end of said lever and moving the lower end thereof forward or backward, a horizontal sear having its inner end or point arranged to be engaged with and disengaged from said shoulder and its outer end formed with a toe, a trigger formed with a toe which is adapted to be engaged with and disengaged from said sear-toe, and means for operating said sear and trigger, substantially as described.

13. In breech-loading ordnance of the character described, the combination, with the centrally-bored breech-plug and a firing-pin arranged therein and provided with a shoulder near its rear end and with a spiral spring and a grooved sleeve, both being arranged in front of said shoulder, of a pivoted cocking-lever having a forked lower end engaging said grooved sleeve, a pivoted tray provided with a collar having a projection upon its upper portion which is formed with a cam-groove for engaging the upper end of said lever and moving the lower end thereof forward or backwaad, a horizontal sear having its inner end or point arranged to be engaged with and disengaged from said shoulder and its outer end formed with a toe, a trigger formed with a toe which is adapted to be engaged with and disengaged from said sear-toe, springs in engagement with said sear and trigger, a bell-crank lever attached to the side of the body of the gun and having one end connected to the outer end of said trigger, and a lanyard connected to its other end and leading first forwardly and then rearwardly, substantially as described.

In testimony whereof I affix my signature in presence of two witnesses.

ROBERT BROOKE DASHIELL.

Witnesses:
M. B. RIDOUT.
E. R. DASHIELL.

513 *Opinion.*

Filed July 10, 1894.

In the Circuit Court of the United States for the District of Maryland.

JAMES B. M. GROSVENOR, SAMUEL SEABURY, and Others
vs.
ROBERT B. DASHIELL. } In Equity.

Infringement of patent.

MORRIS, *district judge:*

The complainants are the owners of U. S. patent No. 425,584, dated April 15, 1890, upon application filed July 19, 1889, granted to Samuel Seabury, a lieutenant in the United States Navy, for an improvement in breech-loading cannon.

The defendant is an ensign in the United States Navy, and is the

patentee of a similar device by letters patent No. 468,331, dated February 9, 1892, upon application filed November 4, 1890.

In Seabury's specification he states: "This improvement relates to breech-loading cannon in which a screw breech block, which is withdrawn in a rearwardly direction, is employed with a swinging carrier or receiver hinging to one side of the breech of the gun, and into which the breech block is withdrawn, and which serves as a guide for directing the breech block into and from its seat in the breech, and as a support for the breech block while out of the gun. In such a gun there are three movements necessary to open the breech, namely: First, the turning of the breech block to unlock it; second, the withdrawal of the breech block backward into the receiver, and, third, the swinging aside of the receiver with the breech block in it. * * * The object of this improvement is to provide for the more rapid working, loading, and firing of such breech-loading cannon by effecting all these movements in succession by a continuous movement of a single lever."

Seabury then proceeds, by reference to nine drawings, to fully describe the device patented by him.

514 The first claim, which is the claim charged to have been infringed by the defendant, reads:

"1. The combination, with a breech-loading cannon and a breech block for the same, which is withdrawn in a rearwardly direction, of a breech-block carrier hinged to the breech, and a breech-block retractor hinged to the breech, separate from the said carrier, to move independently of such carrier to draw the breech block thereinto and push it therefrom, but capable of moving with said carrier while the breech block is therein, substantially as herein set forth."

This claim is a broad one and quite possibly, taken in its largest sense, it might not be sustainable, but it is to be read in connection with the specifications of the patent which accurately describe the device and state the result to be accomplished, namely, to effect all the necessary movements by the continuous action of a single lever operated by hand.

Read in connection with the specification, the claim points out with clearness the combination which the patentee claims as his invention, and he is entitled to a fair and reasonable construction of his claim, since there has not been put in evidence any publication, or United States patent, or device in prior use which limits its construction.

It is to be noticed that the claim does not include the mechanism by which the breech block is rotated in order to release it from the screw-threads, but is only for the combination of the cannon, the breech block, the retractor, and the carrier; the retractor and the carrier to be hinged to the cannon, and the retractor being capable of moving independently of the carrier but also capable of moving with the carrier when the block is resting on the carrier.

The patent principally relied upon to defeat the novelty of Seabury's claim or limit its construction is the English patent to Thorsden Nordenfelt, No. 7195, of February 16, 1888. A full-size model

made after the drawings and description contained in this patent has been produced by the defendant, and, if the model is to be taken as correctly exhibiting the device, it is not an operative machine.

It appears to have inherent difficulties in the adjustment of the retractor and the carrier which, even if defects in the construction of the present model were remedied, would seem to stand in the way of its being useful as a piece of ordnance to be rapidly fired under excitement.

It does embody an attempt to solve the problem of how, by a continuous swing of a hand lever, the breech block can be quickly
515 withdrawn and turned aside, and after the cartridge has been inserted can, by reversing the lever, be returned to its place; but it does not solve that problem, and, moreover, it lacks one essential of Seabury's claim, namely, the retractor is not separate from the carrier and does not move independently of the carrier.

The difficulty of operating the model seems to arise from the dependence of the retractor and carrier on each other, and because the retractor is not separate from the carrier, and from the extremely nice adjustment required in the mechanism designed to move one without interfering with or obstructing the other, the two not being independent and separate.

It would be useless to attempt, without models or drawings, to discuss the different patents which have been put in evidence as defeating or limiting Seabury's first claim. The result of my examination of them is that they do not avail to deprive Seabury of the presumption which his patent gives him that he is the first inventor of the device described by him containing the combination covered by his first claim.

The claim corresponds with the specification and is intelligible and is for the elements of the combination which was the real invention, and when read in connection with the specifications discloses the operative means which Seabury had combined for producing the result intended.

Seabury's patent was granted to him April 15, 1890, and in May he took a working model, somewhat simplified in its mechanism, to the Bureau of Ordnance of the Navy Department at Washington and exhibited it to the chief of that bureau, and was requested to forward proper drawings from which a four-inch gun could be made for trial, if it should be thought desirable by that department to test it. There was also published, May 24, 1890, in "The Scientific American," a very full description of Seabury's invention, with a number of illustrations exhibiting it in several modified forms.

The defendant had, prior to 1890, given his attention to devices for improving the breech mechanism of rapid-firing cannon, and in June, 1890, he was attached to the Bureau of Ordnance as an assistant. In September, 1890, he was assigned to duty at the proving grounds at Indian Head, in Maryland.

Some improved breech mechanism was immediately desired for guns about to be manufactured for new ships, and the defend-
516 ant was urged by his chief to give his special attention to this subject. He informed himself of all he could find had

been accomplished by others, and procured a copy of Seabury's patent as soon as it was published in the Patent Office Official Gazette. He was encouraged by the chief of the bureau to exert himself to produce a mechanism which should be simpler than Seabury's, and in August or September he had been able to complete a model which met with the approbation of his chief who ordered it to be tested. The defendant filed his application for a patent for the device exhibited in this model on November 4, 1890, and a patent was granted to him February 9, 1892.

After the filing of defendant's application for a patent, his device having been tested and approved, a large number of guns were made by the Ordnance Bureau of the navy containing his device. These guns were made under an arrangement with defendant that for the use of his device he should receive a royalty of $125 for each gun.

The defendant's device is alleged to be an infringement of the first claim of Seabury's patent.

It may be said to be substantially admitted by the defendant's expert witnesses that if Seabury's first claim is not construed narrowly, then the defendant's device must be held to be an infringement, because it does accomplish the withdrawal and turning aside of the breech block by means of the combination of a retractor and a carrier both hinged to the cannon and moving independently of each other, and also capable of moving together when turning the breech block aside.

The mechanism is substantially the same as that used by Seabury, although varied in form to render it simpler and more compact. The method of hinging the retractor to the cannon is different in form from Seabury's, but I take it to be the same in operation and effect. In the defendant's mechanism the lever, while operating the rotating rack, turns upon a pin which passes through the retractor, through the lever, and through a projection from the carrier, and the same pin holds the retractor in place. This pin, at the first glance, has the appearance of being the fulcrum on which the retractor hinges, but, as I understand the mechanism, it is not really so, for the retractor does not begin to draw out the breech plug until after the rotating is finished, and then the retractor does not turn on the pin, but is hinged against the breech of the cannon and turns on that fulcrum, the pin only serving to attach the lever to the retractor and not being at all the hinge upon which
517 the retractor turns. I think, therefore, it is fairly to be concluded that in the defendant's mechanism the retractor is hinged to the breech of the cannon.

It may well be that the defendant's device is an improvement upon Seabury's which required invention to contrive, and that as an improvement it was patentable; but since it uses the combination of elements contained in Seabury's first claim it must be held to be an invention which is subordinate to Seabury's patent, and, therefore, if used without his consent, an infringement.

Among other defenses, it is contended that this proceeding is in effect an attempt to enjoin the United States, as it is for the United

States and in its shops that these guns and breech-loading devices are being made. The testimony shows, however, that the manufacture is by authority and direction of the defendant and under a contract with him by which he is to be paid $125 for each gun. So far as he is concerned, he is not acting in this connection as an officer of the navy, but as a patentee. He assumes that his own patent gives him the right and he is authorizing and protecting the agents of the Government in making and using a device which is an infringement of the Seabury patent. The Government cannot itself lawfully use a patented invention without permission of the patentee, and any one who procures such an act to be done or adopts or accepts its benefits when done is guilty of an infringement.

3 Robinson on Patents, sec. 897; sec. 910.
James *vs.* Campbell, 104 U. S., 357.

It is also urged that complainants are not entitled to relief because of their charges in the bill imputing bad faith to certain officers of the Ordnance Bureau, and, having failed to sustain these charges by proof, they are not to be allowed to claim relief upon the ground of an infringement unattended with fraudulent acts.

I cannot agree with this contention.

The complainants having established the validity of the Seabury patent and the fact of infringement by the defendant, they are entitled in a court of equity to be protected by injunction against the continuance of the infringement. It is the right to this relief which gives the complainants their standing in court, and they have it without regard to whether the infringement has been a mistake or in bad faith.

518 *Decree.*

Filed July 19, 1894.

At a stated term of the circuit court of the United States of America for the district of Maryland, in the fourth circuit, held at the court-house, in the city of Baltimore, on the nineteenth day of July, 1894.

Present: Hon. Thomas J. Morris, district judge.

JAMES B. M. GROSVENOR, LAVINIA WILSON, EDWARD H. LITCHFIELD, and SAMUEL SEABURY
against
ROBERT B. DASHIELL.

This cause having come on to be heard upon the bill of complaint herein, the answer thereto of the defendant, Robert B. Dashiell; the replication of the complainants to such answer, and the proofs, oral, documentary, and written, taken and filed, and said cause having been argued by counsel for the respective parties:

Now, therefore, in consideration thereof, it is this 19th day of July, 1894, ordered, adjudged, and decreed, and the court doth hereby order, adjudge, and decree, as follows, viz:

That the letters patent No. 425,584, granted and issued on the 15th day of April, 1890, to Samuel Seabury, being the letters patent referred to in the bill of complaint herein, are good and valid in law.

That the said Samuel Seabury was the first and original inventor and discoverer of the improvement in breech-loading cannon, as described and claimed in the said letters patent and the specification annexed thereto, and the complainants, by mesne assignments, are the exclusive owners of said patent.

That the said Robert B. Dashiell, defendant herein, has infringed upon the said letters patent and upon the exclusive rights of the complainants under the same—that is to say, by making and using and by causing and procuring and authorizing others to make and use one or more breech-loading cannon embodying the invention described in said letters patent, and particularly referred to and claimed in the first claim thereof, as charged in the said bill of complaint; and it is further—

519 Ordered, adjudged, and decreed that the complainants do recover of the defendant the profits, gains, and advantages which the said defendant has received or made or which have arisen or accrued to him since the 15th day of April, 1890, from the said infringement, and also the damages sustained by the complainant arising out of the said infringement of said letters patent by the said defendant since said date; and it is further—

Ordered, adjudged, and decreed that the said complainants do recover of the defendant their costs and charges and disbursements in this suit, to be taxed; and it is further—

Ordered, adjudged, and decreed that it be referred to Robert Lyon Rogers, Esq., one of the masters of this court, residing in the city of Baltimore, to ascertain and take and state and report to the court an account of the number of breech-loading cannon made or used or caused, procured, or authorized by the defendant to be made or used by others embodying the invention described in said letters patent and particularly referred to in the first claim thereof, and also the gains, profits, and advantages which the said defendant has received or which have arisen or accrued to him since the 15th day of April, 1890, from infringing the said exclusive rights of the said complainants by the manufacture, use, or sale of the said improvements, or authorizing others to manufacture and use the said improvements patented in said letters patent, and also the damages sustained by the complainants arising out of said infringement; and it is further—

Ordered, adjudged, and decreed that the complainants, on such accounting, have the right to cause an examination of said defendant, *ore tenus* or otherwise, and also the production of the books, vouchers, and documents of said defendant, and that the said defendant attend for such purpose before said master from time to time, as said master shall direct; and it is also further—

Ordered, adjudged, and decreed that a perpetual injunction be issued in this suit against the said defendant restraining him, his agents, clerks, servants, and all claiming or holding under or through him, from making, using, or selling, or in any manner disposing of

or authorizing others to make, use, and sell breech-loading cannon embracing the invention or improvements described in the said letters patent and particularly referred to in the first claim thereof, pursuant to the prayer of the said bill of complaint.

THOS. J. MORRIS, *Judge.*

520 *Perpetual Injunction.*

Issued July 27, 1894.

THE UNITED STATES OF AMERICA, *District of Maryland,* } *To wit:*

[SEAL.] The President of the United States of America to Robert B. Dashiell, Greeting:

Whereas James B. M. Grosvenor, Lavinia Wilson, Edward H. Litchfield, and Samuel Seabury have filed their bill of complaint in the circuit court of the United States for the district of Maryland for an injunction to restrain you, your clerks, servants, employees, agents, attorneys, and all other persons acting or assuming to act under your authority, from making and using or causing or procuring or permitting to be made and used breech-loading cannon embodying the invention described and claimed in and secured by letters patent of the United States numbered 425,584, granted and issued to Samuel Seabury on the 15th day of April, 1890;

And whereas on the 19th day of July, 1894, it was by this court ordered, adjudged, and decreed that a perpetual injunction issue as prayed in said bill of complaint:

You, your agents, clerks, servants, and all claiming or holding under or through you are therefore strictly enjoined and restrained perpetually from making, using, or selling or in any manner disposing of or authorizing others to make, use, and sell breech-loading cannon embodying the invention or improvements described in the said letters patent No. 425,584 and particularly referred to in the first claim thereof, pursuant to the prayer of the said bill of complaint, under the pains and penalties that may fall thereon. Hereof fail not at your peril.

Witness the Honorable Melville W. Fuller, Chief Justice of our Supreme Court, the 27th day of July, 1894.

Issued the twenty-seventh day of July, 1894.

JAMES W. CHEW,
Clerk of our said Circuit Court.

Marshal's Return on Back of Writ.

"This is to certify that the within injunction was served on the within-named Robert B. Dashiell on board the cruiser New
521 York, anchored in New York bay, on the third day of August, 1894, by showing this original and leaving with him a true copy thereof.

HENRY J. HAYDEN,
U. S. Marshal, E. D. of N. Y.

Dated August 4th, 1894."

Petition for Appeal, Assignment of Errors, Order of Court Allowing the Appeal, and Order of the Attorney General.

Filed August 17, 1894.

In the Circuit Court of the United States for the District of Maryland.

JAMES B. M. GROSVENOR, SAMUEL SEABURY, *et al.*, Complainants,
vs.
ROBERT B. DASHIELL. } In Equity. No. —.

Petition for the allowance of an appeal.

To the honorable the circuit judge of the United States circuit court for the district of Maryland:

Now comes Robert B. Dashiell, the defendant above named, by S. F. Phillips, special assistant United States attorney, acting under an order in this behalf from the Attorney General of the United States, dated the sixteenth day of August, A. D. 1894, and annexed hereto, and petitions for the allowance of an appeal to the United States circuit court of appeals for the fourth circuit from the decree granting an injunction entered herein on the 19th day of July, A. D. 1894, and assigns the following errors of fact and law appearing therein:

1. Error in decreeing that letters patent No. 425,584 granted and issued to Samuel Seabury are good and valid in law.

2. Error in decreeing that said Samuel Seabury was the first and original discoverer of the improvement in breech-loading cannon, as described and claimed in said letters patent No. 425,584 and the specifications annexed thereto.

3. Error in decreeing that Robert B. Dashiell, the defendant, has infringed upon the said letters patent No. 425,584.

4. Error in decreeing that a perpetual injunction be issued
522 in this suit against the said Robert B. Dashiell, his agents, clerks, servants, and all persons claiming or holding under or through him.

5. Error in not dismissing the bill of complaint herein for the want of jurisdiction.

6. The complainants having set forth at large in their said bill of complaint charges of positive fraud alleged to have been committed by the defendant, none of which charges are supported by the proofs, it is on that account error not to have dismissed the bill of complaint.

7. Error in finding that the British letters patent No. 7195 of 1887, issued to Thorsten Nordenfeldt and filed in this cause, do not describe an operative device.

8. Error in finding that said device described in Nordenfeldt British letters patent No. 7195 of 1887 "lacks one essential of Seabury's

claim, namely, the retractor is not separate from the carrier and does not move independently of the carrier."

For all of which manifest errors the said defendant prays the decree above described may be reversed and the bill of complaint herein dismissed with costs.

ROBERT B. DASHIELL,
By S. F. PHILLIPS,
Special Assistant U. S. Attorney.

The defendant, Robert B. Dashiell, having filed his petition praying an appeal from the decree entered in this cause on the 19th day of July, 1894, and having filed his assignment of errors, it is ordered that an appeal to the United States circuit court of appeals for the fourth circuit be allowed, the petition for appeal and the assignments of error by said defendant being filed by S. F. Phillips, special assistant United States attorney, acting under an order from the Attorney General of the United States.

No bond required.

N. GOFF,
United States Circuit Judge, Fourth Circuit.

August 17th, 1894.

A. G. DEPARTMENT OF JUSTICE, W. B. D.
WASHINGTON, D. C., *August* 16, 1894.

S. F. Phillips, Esq., Washington, D. C.

SIR: In the case of James B. Grosvenor *et al.* against Robert B. Dashiell, in which you appear for the defendant at the in-
523 stance and to defend the interests of the United States, please take an appeal to the circuit court of appeals.

Respectfully yours, RICHARD OLNEY,
Attorney General.

UNITED STATES OF AMERICA, *ss:*

The President of the United States to James B. M. Grosvenor, Lavinia Wilson, Edward H. Litchfield, and Samuel Seabury, Greeting:

You are hereby cited and admonished to be and appear at a United States circuit court of appeals for the fourth circuit, to be holden at Richmond, on the second day of October next, pursuant to an appeal from a decree of the circuit court of the United States for the district of Maryland in your favor passed in a cause in said court wherein Robert B. Dashiell is defendant and you are complainants, to show cause, if any there be, why the decree rendered against the said Robert B. Dashiell in said cause mentioned should not be corrected and why speedy justice should not be done to the parties in that behalf.

Witness the Honorable Nathan Goff, judge of the said circuit

court of the United States, this fourth day of September, in the year of our Lord one thousand eight hundred and ninety-four.

[The Seal of the Circuit Court, Maryland.]

N. GOFF,
U. S. Circuit Judge, Fourth Circuit.

Test: JAS. W. CHEW,
Cl'k U. S. Circuit Court, District of Maryland.

Service of the within citation acknowledged this 13th day of September, A. D. 1894.

WILSON & WALLIS,
Sol'rs for Within-named Complainants, Appellees.

524 *Petition and Order of Court Thereon Directing the Clerk to Transmit to Circuit Court of Appeals Original Exhibit.*

Filed September 11, 1894.

In the United States Circuit Court for the District of Maryland.

JAMES M. B. GROSVENOR *et al.*, Complainants,
vs.
ROBERT B. DASHIELL.

Petition.

Now comes the defendant by S. F. Phillips, special assistant United States attorney, and represents that in preparing the transcript of the record in this cause for use on the appeal it will be necessary to reproduce by blue prints or otherwise a number of the drawings introduced as exhibits herein, and prays the court for leave to temporarily withdraw from the files for such purpose such of the exhibits as may prove to be necessary upon giving to the clerk his receipt therefor.

And your petition- further prays for an order directing the clerk to transmit with the record on appeal the original of Complainants' Exhibit marked W. H. S. No. 2.

S. F. PHILLIPS,
Ap'l Ass't U. S. Attorney.

Order.

Upon consideration of the foregoing petition it is ordered that the counsel for defendant have leave to withdraw temporarily from the files such original exhibits in this cause as he may deem necessary for the purpose of having the same duplicated, the clerk to take his receipt therefore.

And it is further ordered that the clerk of this court shall transmit to the circuit court of appeals the original of Complainants' Exhibit W. H. S. No. 2.

THOS. J. MORRIS, *Judge.*

Sept. 11, 1894.

525 *Petition and Order Thereon for Transmission of Certain Papers to U. S. Circuit Court of Appeals.*

Filed September 26, 1894.

In the United States Circuit Court for the District of Maryland.

JAMES M. B. GROSVENOR *et al.*, Complainants,
vs.
ROBERT B. DASHIELL.

Petition.

Now comes the defendant, by Samuel F. Phillips, special ass't U. S. attorney, and moves the court for an order directing the clerk of this court to transmit with the record on appeal original exhibits filed herein as follows:

1. Complainants' Exhibits "A," "B," "C," & "D." (R., p. 20.)
2. Complainants' Exhibits "B^1" to "B^9," inclusive. (R., p. 100.)

Also the original drawing marked "Centre Pivot Mount for 6″ R. F. Gun," it being agreed by counsel, respectively, that such order may be entered.

S. F. PHILLIPS,
Sp'l Ass't Att'y U. S.

Order.

Upon consideration of the foregoing petition, it is, this 26th day of September, 1894, ordered that the clerk of this court transmit the original drawings therein referred to and exhibits with the transcript of the record on appeal.

THOS. J. MORRIS, *Judge.*

Petition and Order Thereon Extending Time to File the Transcript of Record.

Filed September 27, 1894.

In the United States Circuit Court for the District of Maryland.

JAMES M. B. GROSVENOR *et al.*, Complainants,
vs.
ROBERT B. DASHIELL.

526 Now come Samuel F. Phillips, special assistant U. S. attorney, of counsel in this case, and representing to the court that by reason of the large number of exhibits containing drawings, &c., which it will be necessary to reproduce, it will be almost if not quite impossible to complete the transcript of the record for filing by the return day (October second), moves the court to extend the time for filing the same twenty days.

S. F. PHILLIPS,
Special Ass't U. S. Att'y.

Order.

Upon consideration of the foregoing motion, it is, this 27th day of September, A. D. 1894, ordered that the time for filing the transcript of record herein in the clerk's office of the circuit court of appeals for the fourth circuit be, and the same is hereby, extended and enlarged to the 22d day of October, A. D. 1894.

THOS. J. MORRIS, *Judge.*

Stipulation as to Record.

Filed September 28, 1894.

In the United States Circuit Court for the District of Maryland.

JAMES M. B. GROSVENOR *et al.*, Complainants,
vs.
ROBERT B. DASHIELL. } No. —. In Equity.

Stipulation.

It is hereby stipulated that in making up the transcript of the record on appeal to the circuit court of appeals copies of the drawings marked Complainants' Exhibits "A," "B," "C," and "D," and B^1, B^2, B^3, B^4, B^5, B^6, B^7, B^8, and B^9, referred to in complainants' pleadings and proofs, at page 20 and page 100, respectively, need not be included therein, but that the original drawings, with the consent of the circuit judge, may be sent up with said transcript to the circuit court of appeals and may there be referred to on the argument, if deemed material by either party.

WM. G. WILSON,
Attorney for Appellees.
S. F. PHILLIPS,
Special Ass't U. S. Attorney, for Appellant.

527 *Order to Transmit Record.*

Thereupon it is ordered by the court here that a transcript of the record and proceedings in the cause aforesaid, together with all things thereunto relating, be transmitted to the said United States circuit court of appeals for the fourth circuit, and the same is transmitted accordingly.

Teste: JAS. W. CHEW, *Clerk.*

UNITED STATES OF AMERICA,
District of Maryland, } *To wit:*

I, James W. Chew, clerk of the circuit court of the United States for the district of Maryland, do certify that the foregoing is a true transcript of the record and proceedings of the said circuit court, together with all things thereunto relating, in the therein-entitled cause.

The Seal of the Circuit Court, Maryland.

In testimony whereof I hereunto set my hand and affix the seal of the said circuit court on this 29th day of September, A. D. 1894.

JAS. W. CHEW,
Clerk of said Circuit Court.

528 *Proceedings in United States Circuit Court of Appeals for the Fourth Circuit in the said Cause.*

October 20, 1894.—Record from the circuit court of the United States for the district of Maryland filed and cause docketed.

Same day order filed extending the time in which to file the record.

October 27, 1894.—Briefs of appellant filed by Special Assistant Attorney General Phillips filed.

November 5, 1894.—Briefs of appellees filed.

November 7, 1894.—Briefs of appellant by Stayton filed.

November 8, 1894.—Cause came on for argument before JJ. Goff, Simonton, and Brawley, and was argued and submitted.

February term, 1895, to wit, February 5, 1895, the court announced and filed the following opinion:

Opinion.

529 United States Circuit Court of Appeals, Fourth Circuit.

ROBERT B. DASHIELL, Appellant,
vs.
JAMES B. M. GROSVENOR and Others, Appellees.

No. 110. In Equity. Appeal from the Circuit Court of the United States for the District of Maryland.

(Argued November 9, 1894. Decided Feb. 5, 1895.)

Heard by Goff and Simonton, circuit judges, and Brawley, district judge.

S. P. Phillips, of Phillips & McKenney, special assistant United States attorney, and William H. Slayton, for appellant; William A. Jenner and William G. Wilson, for appellees.

Statement.

The court stated the case as follows: This is an appeal from a decree rendered in the circuit court of the United States for the district of Maryland, in the chancery cause of James B. M. Grosvenor and others against Robert B. Dashiell, by which it was adjudged that letters patent No. 425,584, granted to Samuel Seabury, dated April 15, 1890, for improvement in breech-loading cannon,
530 are valid, and that the same have been infringed by Robert B. Dashiell; also that said Seabury and his assigns recover from said defendant certain profits and damages, and that a perpetual injunction be issued.

It is claimed in the bill, which was filed on the 25 July, 1892, that Seabury was the inventor and patentee, and that he assigned certain interests in the letters patent to his co-complainants, who with him then owned the entire right and title to the invention; that the defendant, well knowing the premises, has wrongfully, unlawfully and injuriously, with intent to derive profits therefrom and to deprive complainants of the royalties to which they were entitled, conspired, combined and confederated with William M. Folger and other persons, and infringed upon the rights of the owners of said patent, by making and using, and causing and authorizing others to make and use a large number of breech-loading cannon, embodying the inventions described and claimed in and secured by said letters patent, without any authority from said owners so to do, whereby defendant has realized large profits to the loss and injury of the patentee and his assignees; that at the time of the infringement charged the defendant was an officer of the United States Navy, holding the rank of ensign, and was connected with the Bureau of Ordnance of the Navy Department, of which Commodore William M. Folger was then and still is in charge, having control and supervision of the manufacture thereat—under the direction of said bureau—of cannon for the use of the navy of the United States, particularly at the United States navy yard, at Washington, in the District of Columbia; that shortly after said letters patent were issued to Seabury, he exhibited a model of the invention together with drawings relating to the same, to said Commodore Folger, at his office in the Navy Department at Washington, his purpose being to procure a trial of the device mentioned, and in case it proved successful its adoption by the Navy Department, and that the said Folger requested him to furnish his said bureau with working drawings by which the department would be able to construct a breech-loading cannon, embodying such invention, which Seabury proceeded to do, and delivered the same to Folger; that afterwards the defendant, making use of the information and drawings so provided, which it is charged were given
531 him by Folger for that express purpose, undertook to construct and devise a design substantially the same as that so invented by Seabury, changing the form of certain parts so as to evade the charge of infringement; that defendant, in pursuance of this purpose, did contrive a design and make drawings of the same, which he furnished to Folger, who thereupon, with the consent, cooperation and aid of defendant, proceeded to construct and make trial of a breech-loading cannon in conformity with the design of defendant, embodying substantially the Seabury invention, with immaterial changes in the detail thereof, purposely designed to evade the charge of infringement, and intended to defraud Seabury and his assigns of their rights under the said letters patent; that a test of the same proving successful by reason of the great merit of the Seabury invention embodied therein, a large number of breech-loading cannon were constructed at said Washington navy yard, according to such design, under the procurement of defendant, and with his consent as the pretended inventor of the design, as well as

in pursuance of the conspiracy, combination and confederacy of said Folger, with the defendant; that a large number of such cannon are now in process of construction at said navy yard under such consent and authority and in pursuance of such conspiracy and confederacy; that such infringement was conducted by defendant and Folger in secret manner, and was intentionally kept from the knowledge of complainants until it reached such dimensions that concealment was no longer possible; that such acts worked a great fraud on Seabury and his assigns, as they were intended to do; and that defendant will continue to make and use, and cause others to make and use breech-loading cannon under the invention secured by said letters patent, and thereby cause irreparable injury to plaintiffs unless restrained by writ of injunction.

The prayer of the bill is that defendant may be compelled to account for and pay to plaintiffs the income and profits so unlawfully obtained, together with damages and costs, and that he be perpetually injoined and restrained, as also his clerks, servants, employés, agents, attorneys and all persons acting under his authority, from making and using, or causing to be made and used breech-loading cannon embodying the Seabury invention, and for such further relief as may in the premises be just and proper.

532

The defendant answered denying all the charges of fraud, and particularly the allegations as to the conspiracy and confederation with the chief of the Bureau of Ordnance of the Navy Department. He also denied that Seabury was the true, original and first inventor of the improvement set forth in his letters patent. The answer admits that the defendant is a naval officer, connected with the Bureau of Ordnance, and that Commodore Folger is the chief of said bureau; that the defendant has been under the orders of such chief while he was engaged in the manufacture of the cannon alluded to in the bill; that in December, 1889, the defendant told Folger that he was designing a rapid-fire gun, and that he completed his plans and drawings for a model of the same in April, 1890; that in September, 1890, he was placed in charge of the "proving grounds," at Indian Head, in Maryland, where he has since been, but that he has had nothing to do with the manufacture or sale of the cannon alluded to, except to test them as to structural weakness, facility of operation, rapidity and precision of fire, and their efficiency and safety; that in August, 1890, he exhibited a model of his invention to Commodore Folger, who asked him to prepare working drawings for a four-inch rapid-fire gun, which he did, sending them to the bureau in September, 1890; that breech-loading cannon have been constructed at the navy yard at Washington, embodying an invention patented to him on the 9th day of February, 1892, but that they were manufactured under the orders, supervision and authority of Commodore Folger and the officers of said navy yard. Other matters are set forth in the answer, but will not be referred to, as from our view of the case, they are immaterial.

A great number of witnesses were examined, relative to the patents in controversy, to the state of the art to which they belong, and to

the manufacturing of breech-loading cannon at the Washington navy yard, the contract relating to the use of defendant's invention, and the royalty to be paid him by the Navy Department for the right to use the same.

The case came on to be heard, and on the 19th day of July, 1894, a decree was entered in the court below, adjudging the Sea-
533 bury patent to be valid in law; that the defendant had infringed upon the same; that complainants recover of him the profits made by him on account of such infringement; that an account be stated showing the number of breech-loading cannon made and caused by defendant to be made, embodying the invention described in the Seabury patent, and the gains and profits defendant had received from his infringement of the same, together with the damages complainants have sustained thereby; and that a perpetual injunction be issued against the defendant restraining him, his agents, clerks, servants and all persons claiming or holding under him, from making, using or selling, or in any manner disposing of, or authorizing others to make, use and sell breech-loading cannon embracing the invention or improvements described in the Seabury patent. From this decree an appeal was prayed for and allowed, the petition for the appeal and the assignments of error being filed and prosecuted by counsel acting under an order of appointment and instructions from the Attorney General of the United States, as well as by counsel for defendant below.

GOFF, *Circuit Judge:*

We think that the pleadings and proofs of this cause clearly demonstrate that this is, in substance, if not in form, a proceeding the object of which is to prevent the making of breech-loading cannon, of a certain character and by a particular device, at the navy yard of the United States, in the city of Washington, District of Columbia, by those officially in charge thereof representing the Government of the United States; and also, it is clearly shown that the injunction granted by the court below will in effect prohibit the officers so in charge of said navy yard, from manufacturing such cannon for use on the vessels of war of the United States, as provided for under the provisions of existing legislation, the reason for such prohibition being that, in so making breech-loading cannon, said officers are infringing on the rights granted to Samuel Seabury by letters patent No. 425,584, dated April 15, 1890.

Should a suit instituted under such circumstances and with such intention be sustained? Do not public policy and the rights of the Government in its sovereign capacity require that parties
534 feeling themselves aggrieved on account of matters relating to such transactions as we have alluded to—to such circumstances as are set forth by the evidence taken and filed in this case, should be compelled to seek relief and compensation, if so entitled, by proceeding in another manner and before another tribunal, and that the courts should not use their writs of injunction so as to retard and embarrass the Government in the prosecution of work, the product of which is absolutely essential to the public welfare and

the national defence? We think that the consent of the owner of a patented device, while it is desirable and should be obtained, if it conveniently and reasonably can, is not positively necessary, in order to enable the United States to use the invention described in the letters patent, particularly in cases where it relates to the mode of construction of implements of warfare required by the Government and indispensable to the armament of its vessels of war. Such right to take and use the property of the citizen for Government purposes is indisputable, an inborn element of sovereign power essential to the independence and perpetuity of the nation.

The Constitution of the United States provides that Congress shall have the power to raise and support armies, and to provide and maintain a navy. By virtue thereof the Congress has appropriated and caused to be expended large sums of money for such purposes, and for the manufacture of arms, the construction of ships of war, and the establishment of navy yards, including the one at Washington where the breech-loading cannon mentioned in complainants' bill, have been and are now being manufactured. Under recent acts of Congress, millions of dollars have been expended through the Navy Department, in the purchase and manufacture of the armor plate and armament required for the ships of war lately constructed and now in process of building, and in the procurement and installation of the improved machinery for use in the breech-mechanism shop at said Washington navy yard, for the purpose of constructing cannon of the character referred to in the bill. It is evident from the legislation by Congress on this subject, and the action of the officials of the Government thereunder, that it was and is the intention of the United States to cause to be manufactured for national purposes, breech-loading cannon of the most approved and scien-
535 tific design, utilizing such plans and inventions as would best secure the result desired, and making in those cases where the right to use a patented device had not been secured, just compensation to the owner thereof, in the manner usual under such circumstances. After careful investigation, involving the examination of many designs, drawings and innovations, with the aid of models and experiments, the chief of the Bureau of Ordnance, formulated his plans, selected and adopted the devices and inventions he deemed best, and commenced the making of the breech-loading cannon, as he was authorized and directed by the Congress to do, employing in connection with such work the defendant in this case. If the invention claimed by complainants is being used and infringed by those so representing the United States, then the owners of the same can recover just compensation for such use and infringement, from the Government, by suit in the Court of Claims, or by means of an appropriation for that purpose made by Congress, on application made to that body.

The fifth amendment to the Constitution of the United States contains the provision that private property shall not be taken for public use without just compensation, and this we must consider as an implied assertion that on making such compensation it may

be so taken. It will be noted that this is not a restriction of the power to take private property for public use, but that it is a requirement that when such property is so taken just compensation shall be made therefor to the owner. That incident of sovereignty—the right to take—belonging to every independent government is not disturbed, nor is the manner in which such right is to be exercised, or the mode by which the proper compensation is to be ascertained and paid set forth. And because Congress has provided by statutes a procedure for the condemnation of private property required for public purposes, in certain instances and not in others, we are not therefore to infer that the power to take does not exist as to the other matters, nor should we construe such legislation as a limitation of that power relative to other cases of like character not embraced in such enactments. In other words the non-user of a power is not to be used to disprove its existence.

536 The title the individual citizen has to his property is good as against all other citizens, but it must yield to the necessity of the Government, and submit to the social requirements and rights of the general public—and this right of the Government to protect itself and defend its own, is not to be controlled by any other power, nor is it to depend on the consent of any person, company or corporation. The only restriction, as we have already remarked, is the constitutional requirement that just compensation shall be made to the owner for property so taken. The proper mode of proceeding in order to secure compensation for private property taken for public use without the consent of the owner, and in the absence of legal action for condemnation, has received judicial consideration, the Supreme Court of the United States having at different times plainly indicated the same, particularly in cases where the Government has used an invention without the permission of the owner of the letters patent protecting the same. Kohl *v.* United States, 91 U. S., 367, 374; James *v.* Campbell, 104 U. S., 356; United States *v.* Great Falls Mfg. Company, 112 U. S., 645, 656; Hollister *v.* Benedict Company, 113 U. S., 59; United States *v.* Palmer, 128 U. S., 262. Also the following cases in the Court of Claims: Schillinger's case, 24 C. C., 278, 298; Gill's case, 25 C. C., 415; Berdan's case, 26 C. C., 48.

We do not think that contending patentees, striving between themselves and those interested with them, as to the validity of their respective letters patent, should be permitted to close the arsenals, ordinance shops and navy yards of the United States, by injunctions issuing out of their litigation, thereby frustrating the designs of the Government, rendering inoperative the legislation of Congress germane thereto, and causing great loss of the public funds appropriated by Congress in execution of the same. It is true that the United States is not made a party to this action, but it is also true that it is disclosed by the pleadings and evidence, that the cannon the further making of which it is the object of this suit to enjoin, are now being manufactured at the navy yard of the United States, at Washington, by the employés of that establishment, under the direction of the chief of Ordnance of the Navy

Department; and it is apparent that such an observance of the injunction granted by the court below, as should be shown by
537 those to whom it is directed, and as must necessarily be required by the courts while it is of force and effect, will close said navy yard so far at least as the manufacture of breech-loading cannon is concerned, and thereby prevent the enforcement of certain laws of the United States, the consummation of which is of national importance.

Independent of the questions we have been considering, there is another reason why, on the case as made in the record before us, the plaintiffs below are not entitled to a decree in their favor. Their bill of complaint as drawn, rests upon the allegations of fraud contained therein, and it must stand or fall, as the testimony establishes or fails to sustain such charges. The positive assertion of fraud permeates the entire bill—it is the warp and woof of its structure—depending on the combination, conspiracy and confederation of the defendant and William M. Folger, as chief of the Bureau of Ordnance, to use the invention of Seabury and deprive the patentee and his assignees of the benefits and royalties claimed to be secured to them by the letters patent referred to. A court of equity will not grant a decree on another ground where the bill charges actual fraud as the ground of relief, and the fraud is not proven. We find that there is an utter failure to sustain the allegations of fraudulent conspiracy and confederation charged in the bill. It is shown that Commodore Folger, in his endeavor to secure the most useful and scientific plans and devices by which to construct the breech-loading cannon directed by the Congress to be made, the manufacture of which was committed to him—did advise with the plaintiff Seabury and did request of him his plans and drawings, and also that he did the same with the defendant, as well as with others; and also it is shown that Folger believed that the plans of the defendant were best adapted to the object desired to be secured by the Government, and that he agreed to pay a certain sum for the use of the same, under the impression that the defendant was the inventor and patentee of the design so selected. But there was no intention to deprive the true owner of his right to demand and recover just compensation for the said taking and using, and it would not have availed had any such intent existed, for the legal owner could have recovered even though another had by mistake or fraud been paid.

538 The charges of fraud have been made either under an entire misconception of the facts, or with a recklessness that at least is not commendable, and should not be encouraged by an endeavor on the part of this court to relieve the complainants of the embarrassment caused thereby, by holding that they are entitled to a decree founded on some general ground of equity jurisdiction, not specially pleaded, but supposed to be included in the prayer for general relief. While equity will always relieve those who suffer from acts of fraud, it has also always required that those who seek its jurisdiction on that account shall after having carefully scrutinized the cause of complaint, most clearly formulate the allega-

tions of the same, and then that they shall fully prove that which they have so alleged. We do not deem it essential to discuss this matter, elementary as it is in character, but we refer to the following cases, in which the subject is fully considered: Montesquien *vs.* Sandys, 18 Ves., 302; Price *vs.* Berrington, 7 Eng. L. & Eq., 260, in which case Lord Truro says: "When the bill sets up a case of actual fraud, and makes that the ground of the prayer for relief, the plaintiff is not entitled to a decree by establishing some one or more of the facts quite independent of fraud, but which might of themselves create a case under a totally distinct head of equity, from that which would be applicable to the case of fraud originally stated." Wilde *v.* Gibson, 1 Cl. & Fin. N. S., 620; Glasscott *v.* Lang, 2 Phill., 310; Curson *v.* Belworthy, 22 Eng. L. & Eq., 1; Tillinghast *v.* Champlin, 4 Rhode Island, 173, 67 Amer. Dec., 510, in which case the court uses the following language: "In almost all these cases it will be found that the objection to relief was not that the bill did not contain allegations sufficient to afford a basis for the inferior or secondary relief upon which the plaintiff wished to fall back, but that having mingled with those allegations imputations of personal corruption or actual fraud, he had pointed his bill only to relief upon this higher ground, and must therefore succeed upon that ground or not at all." Fisher *v.* Boody, 1 Curt., 206, Fed. Cases, 4814; Eyre *v.* Potter, 15 How., 42, in which the Supreme Court of the United States cite with approval, the case of Price *v.* Berrington, *supra*.

The decree complained of will be reversed and the case will be remanded with instructions to dismiss the bill.

539 On the same day, to wit, February 5, 1895, the court made and entered the following decree, to wit:

Decree.

United States Circuit Court of Appeals, Fourth Circuit.

ROBERT B. DASHIELL, Appellant,
vs.
JAMES B. M. GROSVENOR and Others, Appellees. } No. 110.

Appeal from the circuit court of the United States for the district of Maryland.

This cause came on to be heard on the transcript of the record from the circuit court of the United States for the district of Maryland, and was argued by counsel.

On consideration whereof it is now here ordered, adjudged, and decreed by this court that the decree of the said circuit court in this cause be, and the same is hereby, reversed with costs; and this cause is remanded to the circuit court of the United States for the district of Maryland, at Baltimore, with instructions to dismiss the bill, in

conformity with the opinion and decree of this court. It is
540 further ordered that the mandate of this court issue after the expiration of twenty days from the date hereof.

February 5, 1895.

N. GOFF.

UNITED STATES OF AMERICA:

In the United States Circuit Court of Appeals for the Fourth Circuit.

I, Henry T. Meloney, clerk of the United States circuit court of appeals for the fourth circuit, do certify that the aforegoing is a true copy of the entire record in the therein-entitled cause in the said circuit court of appeals.

Seal United States Circuit Court of Appeals, Fourth Circuit.

In testimony whereof I hereto set my hand and affix the seal of the United States circuit court of appeals for the fourth circuit, at Richmond, on this 14th day of February, A. D. 1895.

HENRY T. MELONEY,
Clerk U. S. Circuit Court of Appeals, 4th Circuit.

541 UNITED STATES OF AMERICA, *ss:*

The President of the United States of America to the honorable the judges of the United States circuit court of appeals for the fourth circuit, Greeting:

[Seal of the Supreme Court of the United States.]

Being informed that there is now pending before you a suit in which Robert B. Dashiell is appellant and James B. M. Grosvenor, Lavinia Wilson, Edward H. Litchfield, and Samuel Seabury are appellees, which suit was removed into the said circuit court of appeals by virtue of an appeal from the circuit court of the United States for the district of Maryland, and we, being willing for certain reasons that the said cause and the record and proceedings therein should be certified by the said circuit court of appeals and removed into the Supreme Court of the United States, do
542 hereby command you that you send without delay to the said Supreme Court as aforesaid the record and proceedings in said cause, so that the said Supreme Court may act thereon as of right and according to law ought to be done.

Witness the Honorable Melville W. Fuller, Chief Justice of the United States, the third day of April, in the year of our Lord one thousand eight hundred and ninety-five.

JAMES H. McKENNEY,
Clerk of the Supreme Court of the United States.

543 [Endorsed:] 15842. Supreme Court of the United States. No. 958. October term, 1894. Robert B. Dashiell, appellant, *vs.* James B. M. Grosvenor *et al.* Writ of certiorari. Return thereon & agreement of counsel. Office Supreme Court U. S. Filed Apr. 15, 1895. James H. McKenney, clerk.

544 In the United States Circuit Court of Appeals for the Fourth Circuit, February Term, A. D. 1895.

ROBERT B. DASHIELL, Appellant,
vs.
JAMES B. M. GROSVENOR, LAVINIA WILSON, EDWARD H. LITCHFIELD, and SAMUEL SEABURY, Appellees.

Return to Writ of Certiorari.

I, Henry T. Meloney, clerk of the United States circuit court of appeals for the fourth circuit, in obedience to the foregoing writ of certiorari issued out of the Supreme Court of the United States and addressed to the honorable judges of the United States circuit court of appeals for the fourth circuit commanding them to transmit to the said Supreme Court the record and proceedings in the cause wherein Robert B. Dashiell is appellant and James B. M. Grosvenor, Lavinia Wilson, Edward H. Litchfield, and Samuel Seabury are appellees, do attach to the said writ a copy of a certain stipulation between the attorneys of record for the several parties in said cause, dated the 9th day of April, A. D. 1895, the original of which
545 has been heretofore filed in this court, and do make the same my return to said writ.

In testimony whereof I have hereunto set my hand and affixed the seal of the United States circuit court of appeals for the fourth circuit, at the city of Richmond, in the State of Virginia, this 13th of April, A. D. 1895.

[Seal United States Circuit Court of Appeals, Fourth Circuit.]

HENRY T. MELONEY,
Clerk U. S. Circuit Court of Appeals, Fourth Circuit.

546 In the United States Circuit Court of Appeals for the Fourth Circuit, February Term, A. D. 1895.

ROBERT B. DASHIELL, Appellant,
vs.
JAMES B. M. GROSVENOR, LAVINIA WILSON, EDWARD H. LITCHFIELD, and SAMUEL SEABURY, Appellees.

Stipulation.

It is hereby stipulated by and between the attorneys of record for the respective parties in the above-entitled cause that the certified transcript of the record of said cause filed in the clerk's office of the Supreme Court of the United States on the 25th day of March, A. D. 1895, with the petition for a writ of certiorari herein, may be received

considered as the transcript of the record on the return to the t of certiorari granted on the 1st day of April, 1895.

S. F. PHILIPS,
Special Assistant U. S. Attorney, in Behalf of Appellant.
WM. P. WILSON,
Attorney for Appellees, Petitioners.

April 9th, 1895, Washington, D. C.

I do certify that the foregoing is a true copy of the original stipulation on file in the said entitled cause in my office.

[Seal United States Circuit Court of Appeals, Fourth Circuit.]

HENRY T. MELONEY,
Clerk U. S. Circuit Court of Appeals, 4th Circuit.

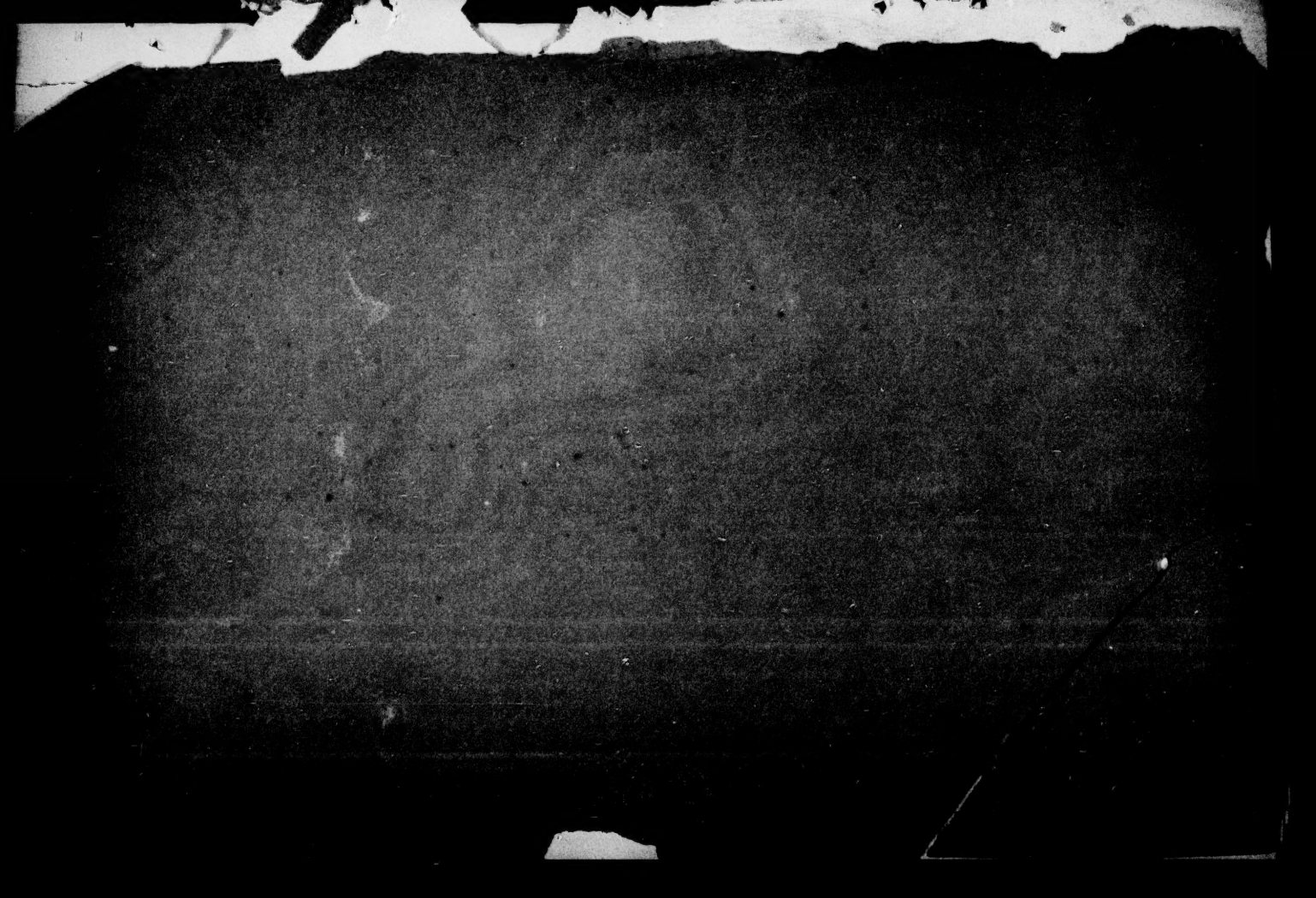

SUPREME COURT OF THE UNITED STATES.

ROBERT B. DASHIELL,
Appellant,
vs.
JAMES B. M. GROSVENOR *et al.*,
Appellees.
} In Equity.

APPELLANT'S BRIEF UPON THE MECHANICAL QUESTIONS.

Complainants originally set up allegations of infringement of Seabury's first and fourth claims; but in their brief in the Circuit Court counsel opposed say (p. 24):

> "No claim is made in this suit against the Dashiel gun, excepting under claim 1 of the Seabury patent."

It is therefore necessary to consider only Seabury's first claim, which is as follows:

> "The combination, with a breech-loading cannon and a breech-block for the same, which is withdrawn in a rearward direction, of a breech-block carrier hinged to the breech, and a breech-block retractor hinged to the breech separate from said carrier to move independently of said carrier, to draw the breech-block thereinto and push it therefrom, but capable of moving with said carrier while the breech-block is therein, substantially as herein set forth."

State of the Art.

Mr. Seabury in his specification says:

> "In such a gun there are three movements necessary to open the breech, namely: first, the turning of the breech-block to unlock it; second, the withdrawal of the breech-block backward into the receiver; and, third, the swinging aside of the receiver with the breech-block in it. These three movements have hitherto been *separately* performed *by hand*, the breech-block having been first turned to unlock it by hand and then pulled by hand back into the receiver, and the receiver having been then swung aside by hand with the breech-block in it to open the breech."

This is an entirely erroneous and misleading resumé of the state of the art.

The three principal systems of heavy ordnance, indeed the only systems which have been fully and satisfactorily reduced to practice, are (1) the muzzle-loading, (2) the wedge breech-loading, and (3) the slotted screw breech-loading systems. The English have fully developed the first, adhering to it until about the year 1880. Krupp and Hotchkiss are manufacturers and adherents of the second, a system in which the breech of the gun is closed by a tapering block or wedge sliding in a mortice in the rear end of the gun. The French have introduced the third system, beginning its development and use as early as 1860, and adhering to it to the exclusion of nearly every other type, so that the principle of the slotted screw, although now common throughout the ordnance world, is commonly known as the *French* system of breech closure. For twenty years, from 1860 to 1880, while England clung to her muzzle-loaders, France was using the slotted screw breech-loader. It is, therefore, not surprising to find in France and among French inventors the principal steps marking

the development of this system of operating the breech fermeture, although eminent engineers in other countries have also contributed to this result.

A breech plug on the slotted, interrupted, or mutilated screw system requires, first, to be revolved on its longitudinal axis to unlock it from the gun-body; secondly, to be retracted or withdrawn rearwardly in line with that axis to pull it out of the gun, and, thirdly, to be swung away from the rear opening or "screw-box" of the gun on a suitable tray or carrier in order to open the breech for loading. The reversal of these motions closes the breech for firing.

In the earlier days the guns were of the class now known as low-powered ordnance—guns in which the strains were not especially severe. The breech with the existing gas check (the Broadwell Ring) could be operated easily by hand. As greater strains came to be brought on, and higher efficiency to be demanded of the gun, a new gas check, the De Bange, and most recently the brass cartridge case, came into use. And even these new gas checks, owing to the present high pressures, often stuck hard in the gun after firing, and were difficult of extraction. A *breech mechanism* thus became a necessity. Then the improved means of handling ammunition caused a demand for increased rapidity of movement in operating the breech mechanism. The ultimate, and ideal, objective was naturally the simplest and fewest movements required to open or close the breech, in fact, the accomplishment of the three above mentioned motions by a *single* movement—in one direction to open, in the opposite direction to close the breech. And, as a matter of fact, for many years, both officers and inventors have been looking for some mechanism which would more satisfactorily enable the gunner, by a single motion of the hand, to cause the breech block to perform the three movements above enumerated.

There are a number of inventions disclosing mechanical contrivances for operating the screw breech plug and tending to simplify the movements required. Among the earliest patents for mechanisms of this kind are:

(1.) United States patent to Shenkle & Saroni, No. 9943, dated August 16, 1853. The specifications state (Defendant's Proofs, p. 330) that the invention consists in a method of performing all three of the motions of a slotted or mutilated screw breech plug, rotation, withdrawal and swinging aside, "by the motion of a *single* lever worked by the hand of the gunner." These specifications also show that the breech plug was to be operated by *mechanical* means between it and the operator's hand.

(2.) United States patent to J. W. Cochran, No. 26,256, dated November 29, 1859, which shows an intention to simplify the movements required of the slotted screw breech plug in opening and closing the breech, and the use of *mechanical* means between the plug and the hand of the operator for effecting two of these movements (Defendant's Proofs, p. 333).

(3.) United States patent to Wm. F. Goodwin, No. 43,310, dated June 14, 1864, which shows an intention to simplify the said movements still further, and to use *mechanical* powers in operating the breech plug.

The above-named patents indicate clearly that even in the United States and prior to 1864 there were efforts made and fully disclosed in patent specifications tending (1) to a simplification of the three movements required to operate a slotted screw breech plug and (2) to the use of mechanical means for accomplishing such movements. But in a country almost wholly given to the use of muzzle-loading

guns until 1880 it could not be expected that these inventions would be much utilized.

Coming down to more recent times there are:

(4.) British patent to Joseph Farcot, No. 3402, of March 5, 1887 (Defendant's Proofs, pp. 209, 225 and 281). This shows a slotted screw breech plug, the three movements being performed by the revolution in *one* direction of a crank arm or lever. Mechanical means are utilized to actuate the breech plug in all three of its movements for opening as well as for closing, and none of them are performed by hand except through the crank handle. Analyzing the construction of the mechanism, we find that the three movements are performed by the rotation or revolution of a vertical axis, shaft or pintle in one direction for opening, in the opposite direction for closing the breech. Power is applied to this axis or shaft by means of any appropriate mechanical power. The shaft is a hinge pin working in lugs on the breech of the gun. It forms the hinge upon which the tray turns in swinging away from or back to the breech; it is also the "driving shaft" for the rotating and retracting gear of the breech plug. Its appearance marks a great step in advance in the development of the breech mechanism and the accomplishment of the "three motions in one."

(5.) British patent to J. B. G. A. Canet, No. 7435, March 28, 1888, shows the same principles of a combined hinge pin for the tray or carrier and "driving shaft" for the rotating and retracting gear of the breech plug. It also shows (almost exactly as found in the Seabury device) the application of a simple toothed rack meshing with teeth on the breech plug for the purpose of rotating the latter in locking or unlocking from the gun. In this case (see Defendant's

Proof, p. 314), the three movements of rotating, withdrawing and swinging aside are all performed by one "continuous movement of the operating devices."

Thus the problem of the *utmost* simplification of the three movements of the breech plug for the ordinary type gun has been accomplished and is reduced to the rotation in one direction of a vertical driving shaft, working in lugs in the breech of the gun carrying its retractor and rotator, and furnished with power to drive it. Clearly Mr. Seabury's conceptions of the state of the art were erroneous.

(6.) British patents to H. R. Whinfield and James Horne, No. 15,188, and to John Fielding, No. 14,604, 1888 (Defendant's Proofs, p. 297), show clearly the development of *mechanical* power to operate a slotted screw breech plug. Concerning the latter of these mechanisms, it is shown by the specifications and by the testimony that the effect of one continuous motion is "to, first, rotate and unlock the block; and, secondly, to withdraw it from the gun; and, thirdly, to swing the carrier and block positively to one side."

(7.) British patent to Canet, No. 7434, of 1888, shows another mechanism by which the three movements of the breech plug are accomplished by one continuous motion of a crank or lever arm (Defendant's Proofs, p. 225); also,

(8.) United States patent to T. Nordenfeldt, No. 384,537, dated June 12, 1888, shows the same principle of operation. (Defendant's Proofs, p. 347.) In this case the specifications specifically say that the operator is able by—

> "One turning movement of a lever handle * * * to give to such screw block, first, the turning movement to disengage the screw threads, then a backward movement to withdraw it back clear of the breech, and then carry it to one side to leave a clear opening in the breech end of the bore."

(9.) British patent to Albert Sauvee, No. 9813, of 1887 (p. 320), shows mechanical gearing for operating a slotted screw breech plug by a continuous motion in a given direction. (Defendant's Proofs, pp. 208 and 228.) As the specifications and testimony show, this device is one in

> "Which the three operations of rotating the block to unlock it, withdrawing it from the gun to the carrier, and swinging the carrier and block horizontally, are performed in the proper sequence."

And by one continuous motion.

(10.) British patent to Sauvee, No. 9453, July 4, 1887. In this patent is disclosed a breech mechanism for operating a slotted screw breech plug, giving, as the patent (Defendant's Proofs, p. 325) specifically shows and claims, all the three necessary motions of rotation, retraction, and swinging aside, by the continuous movement of a simple hand lever. (Defendant's Proofs. pp.207 and 225.) The general arrangement shows a lever attached to the breech plug near its middle and connecting with the tray or carrier by means of a fulcrum or stud, so that power applied to the other end of the lever will cause the breech plug to move forward or backward in the tray, into or out of the gun; besides this, the necessary gear wheels are fitted to provide rotation of the plug at the proper time. When the breech plug is fully out upon the tray the latter is swung to one side by the continued motion of the same lever. Suitable extractors and a firing apparatus are provided, and the patent shows a complete rapid-firing cannon.

(11.) Still another system in which the three motions required of the breech plug are accomplished by the continuous movement of a single lever is found in the British patent to T. Nordenfeldt, No. 7195, of May 17, 1887. (Defend-

ant's Proofs, pp. 306 and 226.) This system depends for its operation on the revolution of a vertical driving shaft turning in lugs on the breech of the gun and also acting as the hinge of the tray or carrier. Unlike the Farcot and Canet mechanisms, above mentioned as having this same feature of a driving shaft, the Nordenfeldt mechanism uses a lever arm hinged to the breech of the gun to move the breech plug back and forth on the carrier out of or into the gun, the other designs named using a cogged wheel for this purpose. The lever in question, like the Farcot and Canet cogged wheels, is entirely separate from the carrier and moves independently of said carrier, except when the breech plug is fully supported by said carrier, at which time it moves with the latter. The breech plug is rotated by a rack sliding on the face of the breech of the gun connecting with an arm or projection on the driving shaft. This design is specially applicable to rapid firing cannon.

* * * * * * *

Such was the state of the art in the early part of the year 1888. The entire tendency was toward simplifying the motions necessary for handling the breech plug and the employment of mechanical means over the early manual methods for operating the breech plug under the increasing strains put upon it by the demands for higher efficiency continually made upon ordnance. The mechanical means for operating the breech plug had finally developed into (1) a cogged rack or a cogged pinion for rotating the plug; (2) a cogged pinion or its mechanical equivalent, a lever arm, for retracting the plug, and (3) a swinging tray or carrier to swing the plug away from the breech of the gun. The use of combined hinge pin and driving shaft for operating the mechanism, turning in one direction to open and in the other to close the breech, seems to be the favorite principle under which the mechanical part is designed.

The three movements formerly performed separately and by hand are so simplified that the continuous movement of a single lever (Farcot, Nordenfeldt, 7195, Sauvee, 9453) in a horizontal plane or the continuous revolution of a crank in a given direction (Canet, 7435), had become the means through which power was applied to accomplish all three movements of the breech plug in locking, retracting and swinging aside. In a few words, the breech plug was operated by mechanical means through the employment of a continuous movement of a lever in the hands of the gunner. This was the state of the art in 1888. With this state in view, later developments are interesting. They are:

(12.) A. U. S. Patent, No. 425,584, of April 15, 1890, granted to Samuel Seabury (the patent in suit) which discloses a mechanism by which the three movements of the breech plug are to be obtained by a continuous motion of a single lever. The mechanism in question belongs to the class employing a vertical driving shaft which is the hinge pin of the tray or carrier. The breech plug is moved in and out of the gun, from or on the tray, by a lever arm connected to said plug and hinged at the other end to the breech of the gun, as described in the specifications of the patent itself.

Collecting such breech mechanisms as bear most resemblance to one another through the principle of operation underlying them all, it will be seen that the British patents of Farcot, No. 3402; Canet, 7435; Nordenfeldt, 7195, and the Seabury U. S. 425,584, naturally fall in the same class as designs depending on the revolution of a vertical driving shaft hinged to the breech of the gun and provided with power to turn it. In all four, revolution of this driving shaft in one direction accomplishes the three movements for opening, while revolution of the said shaft in the opposite

direction accomplishes the three reverse movements for closing the breech. All four employ a breech-loading gun, using a slotted, interrupted or mutilated screw breech plug, cylindrical in form, which is withdrawn in a rearward direction on a tray or carrier hinged to one side of the breech to receive and guide said plug in its movements when not actually in the gun, and to swing it out of the way to one side clear for loading. Thus it is shown by the patents quoted, all of which antedate Seabury's patent in suit—

(1.) That as early as 1853 an effort was successfully made to simplify the three movements of the breech plug so that a lever in the hands of the gunner could perform them all. That with this end in view various successful mechanisms have been contrived and patented, all tending to still further simplify the three movements until the world-renowned Sauvee or Canet gun has been produced (Sauvee patent, 9453, 1887), in which the breech is opened and all necessary movements of the breech plug are given by a continuous movement of a single simple lever.

(2.) That as early as 1853, and thence through all the years to the date of Seabury's patent in suit, mechanical means had been designed and patented and operated for performing the necessary movements of the breech plug, and the three movements had *not* "been hitherto separately performed by hand."

The testimony of Mr. Bartlett, defendant's expert witness (Defendant's Proofs, p. 206), is clear upon this point. He says:

> "My examination into the state of the art convinces me that the patentee (Seabury) was *mistaken* in stating that these three movements had been separately performed by hand, as I find quite a number of breech-loading guns in which the movement is performed by a continuous movement of a lever."

Mr. Dodge, another expert witness for the defendant, is also emphatic upon this point. He says (Defendant's Proofs, p. 225):

> "Seabury was not a pioneer in the art in any sense of the word. * * * The result which he sought to attain, namely, the three-fold movement of the breech block by a single movement of an operating lever had been attained by various inventors at an earlier day. Indeed, the mechanism which Seabury adopted possesses very little novelty even as to its minor details. The Seabury patent is grossly misleading in its statement of the prior art. The patent says: 'In such a gun there are three movements necessary to open the breech, &c. * * * These three movements have hitherto been separately performed by hand.' * * * As a matter of fact this was not the state of the art at the time of the Seabury patent. The art had advanced far beyond this point, and mechanism for effecting the three movements of the breech plug had been produced by other patentees."

These statements have not been rebutted or denied by the complainants.

So Seabury's statement of his alleged invention, the single lever movement, is very misleading and his summary of the prior state of the art is not correct.

THE CONSTRUCTION TO BE PLACED UPON SEABURY'S CLAIM I.

The elements of the combination under Seabury's "First Claim," as set out in that claim, and on page 24 of Complainants' brief in the Circuit Court, are:

1. A breech-loading cannon.

2. A breech-block for the same.

3. A breech-block carrier hinged to the breech.

4. A breech-block retractor hinged to the breech.

Are the elements new? Was the state of the art such as to permit of a great, basic and generic discovery and patent? And has Mr. Seabury made this great discovery and been granted this generic patent? Was he the first to accomplish the three motions in one?

Let us first take up the patent to T. Nordenfeldt, British No. 7195, of May 17, 1887, which, chronologically is intermediate between Farcot and Canet. An analysis of this Nordenfeldt patent shows the use of the vertical driving shaft hinged to the breech. This shaft is also the hinge of the tray or carrier. The three motions of the breech plug are accomplished by the revolution in a given direction of this shaft. The shaft is revolved by a lever arm directly connected and keyed on the top of the shaft. A swing of the lever arm through about 180° accomplishes the motions of revolution for unlocking, withdrawal on the tray or carrier, and swinging the breech plug and carrier to one side. In the patentee's words:

> "In such guns I give all the necessary movements to the breech block by means of a lever handle and axis rotating through the arc of a circle,"

Or in Seabury's words (specification of patent) the invention

> "Effects all these movements in succession by a continuous movement of a single lever."

Farcot, in the specifications of his patent of March 5, 1887, had already said (Defendant's Proofs, p. 213)—

> "This invention relates to apparatus so arranged that by the rotation of a *single axis* the *successive* movements necessary for introducing or withdrawing the breech block of a breech-loading gun are performed with ease, rapidity and exactness."

All three patents quoted (Farcot, Canet and Nordenfeldt) show positively that the specifications of Seabury's patent in suit are wholly incorrect as regards the state of the art at the date of his patent application; that the outline of his alleged invention is not an outline or description of his *own* invention, but that of others before him; in short, that he was not a pioneer in the art. Therefore, no claim of his can be a *broad* claim nor a *generic* claim, nor can any of his claims be read in connection with that part of the specifications just shown to be erroneous in its statement of facts. His specifications, amended to read truthfully with reference to the state of the art, would have to read somewhat as follows:

> "The object of this improvement is to provide means, as hereinafter described, by which the more rapid firing, loading and working can be accomplished in breech-loading ordnance, the breech plug of which is actuated by the well-known principle of a single lever with a continuous movement."

(Such is the general sense of the Defendant's specification.)

The operative device, the fundamental principle of Seabury's mechanism, fully described in his specifications (see also Defendant's Proofs, p. 183), is the driving shaft and hinge pin combined. It exists in prior inventions of (1) Farcot, (2) Canet, (3) Nordenfeldt. In all four constructions its functions are precisely the same, and in all it is hinged to, or works in lugs on, the breech of the gun. All four have retractors which are, in the language of the Seabury specification—

> "Hinged to the breech, separate from the carrier to move independently of said carrier to draw the breech block thereinto and push it therefrom, but capable of moving with said carrier while the breech block is therein."

And, as before stated, all are cannon with precisely similar breeches, breech plugs and trays or carriers.

What, then, is the novelty of the Seabury over the prior inventions in the four patents cited?

(1.) It is *not* the form of breech or breech plug or carriers, for all are exactly alike.

(2.) It is *not* the principle of continuous movement in a given direction of the point where power is applied, for all depend on the revolution of a combined driving shaft and hinge pin to effect the three motions of the breech plug, and that shaft moves or rotates in *one* direction for opening and in the *opposite* direction for closing the breech.

(3.) Seabury's device shows no novelty in the fact that his retractor is hinged to the breech, separate from said carrier, nor that it moves independently of this carrier to draw the breech block thereinto or push it therefrom, nor that it is capable of moving with said carrier while the breech block is therein. The same conditions exist in *all four* patents cited: Farcot, Nordenfeldt, Canet, Seabury.

But we must examine further into the meaning of the words just used. All are simple, unmistakable English words, applying to exactly similar parts in all four devices, with the exception of the word "retractor." This means something which "draws back," "withdraws." Is there a difference in the retractors of these four patented devices? Inspection shows that there are differences (1) in their *form* or *shape;* (2) in their method of attachment to the driving shaft at their axial ends (for Farcot's is rigidly keyed to that shaft and revolves with it at all times; Canet's has a peculiar arrangement due to the resolution of the forces of the screw for locking the said shaft and retractor together at the proper time; Nordenfeldt and Seabury both employ a

stop on a sleeve rigidly attached to the driving shaft to abut against the retractor to withdraw the breech plug on the tray or carrier, and both employ a latch or catch to lock the shaft and retractor for the return movement); (3) there is also a difference in the method of attaching or connecting the other end or part of the retractor to the breech plug.

Thus novelty is shown in the retractors in the three features just described, viz: (1) shape, (2) method of connecting the retractor to the shaft, and (3) method of connecting the retractor to the breech plug.

In other words, the "retractor" is not a novelty with any of the four, but the details of shape and construction are the only differences.

The operative devices of the four mechanisms are the same, and therefore claim 1 of the patent in suit to be valid must be confined to a claim for the *specific construction* set forth in that patent; such constructive features are the only new things in it. Therefore, in view of the patents of Nordenfeldt, Farcot and Canet, Seabury's claim 1, and every element in it, are fully covered by prior claims of these inventors, and claim 1 is *not* valid unless viewed in the light of the specifications setting forth the specific construction employed, and as limited by the words "substantially as set forth."

Following the development of the art still further, we find the Nordenfeldt and Seabury designs using a lever type of retractor. Comparing the two *vis-a-vis*, we find that, two years before Seabury, Nordenfeldt patented a device to which the similarity of the Seabury is remarkably striking.

Both use the well-known driving shaft to do all the work required; the shaft rotates in *one* direction to open the breech, in the opposite to close it. In both, this shaft is the axis or hinge of the tray or carrier; in both, the shaft is also the hinge of the retractor, the shaft turning in lugs on

the breech of the gun. In both the retractors are lever arms which in operation are connected to the driving shaft so as to turn with it to withdraw the breech plug on the tray or carrier or push it therefrom. In both, the said retractor is entirely independent of the carrier, and can

> "Move independently of it to draw the breech block thereinto or push it therefrom, but is capable of moving with said carrier while the breech block is therein."

In both, the radial end of the retractor is connected to the breech plug by means of a ring or collar which allows the plug to turn in it on its axis but moves with the plug in the direction of that axis.

In both, the retractor or withdrawing arm is unemployed while the breech plug is being rotated for locking or unlocking. In both, as soon as the plug is unlocked, a projection on a sleeve rigidly connected with said driving shaft abuts against a portion of the retractor and causes thereby the latter to swing with said shaft to withdraw the breech plug on the tray. In both, the movement of the driving shaft to bring the said projection against the retractor is utilized to put in action a latch, catch or bolt to lock shaft and retractor together so that they will revolve together for the return movement, the said latch, catch or bolt being automatically tripped at the proper moment to permit the driving shaft to continue its revolution for locking the breech plug, leaving the retractor behind it. Finally in both all necessary movements are accomplished in succession by the continuous movement of a single lever in a horizontal plane.

Every detail of the principles of action are found in both structures. Both revolve the breech plug by means of a rack sliding on the face of the breech and gearing with the rear end of the plug, the rack being operated by a crank

arm rigid with the driving shaft. Both use the lever of the third class as a retractor, hinged to the breech through a vertical driving shaft at one end and attached to the breech plug at the other. Examining the methods of the attachment of the retractor to the breech plug, we find that both use a circular sleeve connected to the rear of the plug so as to permit the plug to revolve on its axis without revolving the sleeve, yet so secured that when the sleeve is moved in the direction of that axis the breech plug moves with it Nordenfeldt attaches his ring or sleeve on the outside of the plug. Seabury on the inside. The difference between the two devices lies only and solely in the different *mechanical* details *of construction* of the parts, and it is these mechanical details of construction, and *these only*, as shown in the patent in suit, that Seabury may have invented. They are clearly shown in his specification descriptive of his construction. His description of his retractor arm shows exactly the construction he proposes to use and does use. His words are:

> "The arms G, the ring G', and the above described connections between them, constitute what may be termed a 'breech block retractor.'"

It is this construction alone which gives a standing to the claim 1 of Seabury's patent, which claim is, as has been clearly shown to be, a claim for construction details "substantially as described" in the specifications.

Analyze his device, element by element, as above, and we see that if his claim 1 is given a broad construction, every element in it is to be found in Farcot or Canet or Nordenfeldt; a sensible, reasonable, unstretched construction of the claim as one for mechanical details is the only basis possible on which claim 1 can stand at all.

Referring to Mr. Bartlett's testimony, Defendant's Proofs,

page 208, in relation to the Nordenfeldt patent, we find the following:

> "I have carefully examined this (Nordenfeldt) patent, element by element, and all the elements named in Seabury's claims 1 and 4 are found in this patent, and in their same relation to the other operative parts of the gun, and the operation of the device is identical with the operations of the elements of claims 1 and 4 of Seabury's patent. * * * I am convinced that the Nordenfeldt English patent, No. 7195, of 1887, is a full, precise and complete anticipation of Seabury's claim 1 unless said claim be limited to the precise mechanism described in his specification."

Mr. Dodge states (Defendant's Proofs, p. 226) in reference to the Nordenfeldt patent in question:

> "This structure is to all intents and purposes, so far as the devices for turning, withdrawing and swinging the breech are concerned, the same as the Seabury structure."

To further emphasize this point, it may be observed that Seabury did not invent (1) the driving shaft, (2) the lever (called a retractor) hinged to the breech by means of that shaft and operated thereby, (3) the use of a ring or collar to attach that lever to the breech plug, (4) the independence from the tray or carrier of that lever or retractor, for all are clearly shown in the Nordenfeldt patent two years before the date of the patent in suit. The *details of construction* may be Seabury's invention.

Such is the conclusion necessarily sequent to a discussion of prior patents for devices actuated, as Seabury's is, by a verticle driving shaft or pintle.

But let us go further and compare the patent in suit with a structure which is actuated by other means than the said vertical shaft—the Sauvee (or Canet) patent (British), 9453,

July 4, 1887. There are two forms of slotted screw breech plug shown for use with this mechanism—the conical and the cylindrical. The operation of each will be discussed separately.

Both Sauvee and Seabury accomplish the necessary movements of the breech plug by the continuous movement of a single lever. In the words of Sauvee's specification (Defendant's Proofs, p. 325):

> "The invention has for its object improvements in apparatus for working the breech mechanism of guns known as the French interrupted screw system. For this purpose I have devised an arrangement by which the various operations are affected by means of an ordinary hand lever."

Thus Seabury's specifications as to what he was about to invent are again shown to be erroneous; he did not invent the single continuous movement of a lever to open or close the breech. It will be convenient to observe here that even the Complainants' own witnesses testify fully on the incorrectness of the Seabury patent specification. Thus Prof. Alger says (p. 31, Complainants' Proofs):

> "I knew there had been in use mechanisms for opening and closing a slotted screw breech mechanism with a single motion."

And, again:

> "I alluded to the Canet (Sauvee) breech mechanism * * * and also the Farcot * * * which I had seen a good many years before. This design opened the breech block by a single motion of a lever, and opened it by a continuous motion of the hand in one direction."

And Commodore Folger, pages 45 and 46 of Complainants' Proofs, says:

> "I have seen a Canet gun in Canet's office in Paris. I was stationed abroad in 1887 and 1888, and I saw that gun in his own office in Paris * * * It was one that opened with a lever."

And in answer to the question,—

> "Had you previously to seeing either of these (Seabury and Dashiell), seen any model of a mechanism which unlocked, withdrew and threw open the screw breech block by handling a single lever?"

Commodore Folger says:

> "I have seen the Canet device, which does all of those things."

Returning now to the Sauvee mechanism using the conical plug, and neglecting for brevity the description of how the breech plug is rotated to lock it in the gun, we find when the plug is unlocked and in the gun the following situation:

The lever arm is about to become a retractor to withdraw the plug on the ordinary form of carrier hinged on one side to the breech as usual; the lever arm near its middle is connected by a pin C to the breech plug, and the roller or stud *i* at the fulcrum end of said lever has made an abutment in the end of groove *h*, and is practically hinged at that point. Referring to Complainants' brief in the Circuit Court, page 38, for their views on the construction and operation of the Sauvee breech mechanism, as set forth in Fig. 2 of the Sauvee drawings, the operation for unlocking is explained and then the brief continues:

> "Further pull of the lever causes the lever to turn on *i* as a pivot, the end of the slot at *h* then being the ful-

crum, and by this motion the block is withdrawn on to the carrier."

Let us apply this to Seabury claim 1. The guns, slotted screw breech closure and carriers are the same. The slotted screw breech closure of Sauvee is a conical plug, but that is unimportant, as the principle of operation by three movements is the same as in the cylindrical plug. Thus the Complainants admit, as just quoted, a *lever* connected to the breech plug at one part and turning on its end as a pivot in the end of a slot in the tray or carrier; in other words, a retractor of *lever* form to withdraw the breech plug from the gun and push it thereinto, on to or from the carrier. The novelty in Seabury's claim lies only in its details of construction, for *both* devices show a slotted screw gun with the ordinary carrier, a breech block retractor separate from said carrier, to move independently of said carrier, to draw the breech block thereinto and push it therefrom, but capable of moving with said carrier when the breech block is therein (Defendant's Proofs, pp. 208 and 220).

In the device for the cylindrical breech plug Sauvee employs a cam groove for the fulcrum of the retractor to slide in, in order to allow the necessary lateral motion, as the lever tends to move in the arc of a circle while the breech plug moves in a right line.

Referring to this Sauvee (Canet) patent, Mr. Bartlett (Defendant's Proofs, p. 208) states:

> "This patent * * * has a breech block carrier hinged to the breech and a breech-block retractor hinged to the breech to draw the breech block into said carrier and to swing the carrier. This construction, in my opinion, has element for element precisely the construction covered by claim 1 in the patent of Seabury, and in view of said patent, claim No. 1 of Seabury's patent can only be held to be a valid claim

by an interpretation which limits it to the precise mechanism described in the specification. A broader interpretation would bring said claim into direct conflict with the prior construction of Canet."

The Dashiell patent in suit, No. 468,331, discloses a structure in which the three movements of the breech plug are accomplished by the continuous movement of a single lever in the horizontal plane. The specifications show clearly what the invention is—a combination of certain details of construction by which strength, simplicity and certainty of action are to be attained. The *details* of *construction* and the *arrangement* of the parts are the invention. The gun, the breech plug and the carrier tray are the same as in all the devices just discussed. The breech plug is rotated for locking and unlocking by means of a rack bar sliding in the front part of the tray below the breech plug and engaging with cogged teeth on the latter. At the right hand end of this rack bar are horizontal teeth engaging the cogged segment on the actuating lever arm. The breech plug is moved in or out of the gun along the tray by means of a bell-crank lever whose fulcrum is pivoted to the tray, and to which power is applied through a vertical bolt at one end of the lever, while the other end is connected to the breech plug. The vertical bolt mentioned passes down through the centre of the cogged segment of the lever arm above mentioned, and through the tray or carrier so as to hold the bell-crank lever down to the carrier. This bolt forms the pivot or fulcrum for the actuating lever while it is rotating the breech plug in unlocking, and is also the means by which power is transmitted from the actuating lever to the bell-crank lever to move the breech plug along the tray. The last tooth to the right on the cogged rack bar comes immediately below the centre or axis of the bell-crank lever when the breech plug is unlocked, and this tooth then

forms the fulcrum for the actuating lever to turn upon and withdraw the plug or return it to the gun, the two levers then moving on the same centre. The usual, well-known double-acting latch is used, as in all other prior mechanisms, to lock the tray to the gun, or the plug to the tray at the proper time. The tray hinges as usual to the breech of the gun by the ordinary hinge pin. Comparing this construction with the Nordenfeldt, 7195; Sauvee, 9453, and Seabury patent in suit, we find (1) the continuous movement of a lever effecting all the three movements of the breech plug; (2) precisely similar guns, similar breech blocks, similar carriers or trays; (3) a sliding rack (in all except Sauvee) engaging with the breech plug to unlock it or lock it. In the Nordenfeldt and Seabury devices this rack slides in ways on the breech of the gun above the plug, while in the Dashiell device the rack is in the tray below the plug. Nordenfeldt and Seabury operate the rack by a *lever* arm, while Dashiell employs a cogged segment—a portion of a cogged wheel. All four use a lever to withdraw or return the breech plug along the tray—Nordenfeldt and Seabury employ a lever of the third class for this purpose—a lever hinged to the breech by a vertical driving shaft or pintle, while Dashiell uses a bell-crank lever hinged to the tray or carrier by a simple screw bolt. The said lever in the Nordenfeldt and Seabury (the retractor) is not in operation, while the breech plug is being locked—performs no part whatever—while the retractor in the Dashiell device forms the sole support for the operating lever, and is always in operation and *never* still while the mechanism is being worked. The Dashiell has no "driving shaft" and no semblance to one—neither has it any latch or bolt to connect the retractor to anything like a shaft as in the other two—nor has it a ring or collar G′ to connect the retractor and breech plug. Thus its construction is different from both Nordenfeldt and Seabury.

All the elements included in Seabury's claim 1 are covered by the claims of Nordenfeldt, which are rather broad, and by the structure of Sauvee, and Seabury's claim 1 must be limited to his precise construction and be qualified by the words "substantially as set forth" in order to be valid in any sense. Dashiell is therefore also entitled to his construction, as it is different from Seabury's construction in the points described.

Recapitulating, it is clear that at the time of Seabury's invention——

(1.) The state of the art was not as he stated it to be in his specification.

(2.) The three movements of the breech plug had *not* been hitherto separately performed by hand.

(3.) The invention of effecting the three movements of the plug by a continuous movement of a lever was not Seabury's.

(4.) No claim of Seabury's can be read in the light of those parts of his specifications which have been shown to be wrong.

(5.) The principle of operation underlying the entire Seabury structure, *i. e.*, the revolution in a given direction of a vertical driving shaft, was old, was not Seabury's.

(6.) The rack for rotating the breech plug was not Seabury's invention.

(7.) Several retractors, mechanical equivalents of Seabury's, and one retractor of almost precisely similar structure, were in use prior to his.

(8.) His claim 1, to be valid, must be construed strictly and so as to cover the *construction* features, "substantially described" in the specification.

(9.) His patent is valid for the specific structure only, and any subsequent patent *not* showing a similar structure does not infringe the patents in suit.

To the success of Complainants' action for infringement of claim 1 it is essential that the Court hold that Seabury was the originator and first inventor of the "retractor," and that he has a monopoly of all retractors which produce the "three movements in one."

Complainants have, therefore, been obliged to try to meet Defendant's testimony as to the state of the art and as to these various other devices which have retractors. They have been unable to find anything to say against any of these anticipating patents except that of Nordenfeldt, 7195. It was very essential that they should say something against this device, for it is almost exactly identical with the Seabury device.

So, Complainants loudly insist that Nordenfeldt's specifications describe an "inoperative" machine; that his patent was consequently void, and that Seabury is therefore entitled to appropriate any of Nordenfeldt's good ideas. Even if the claim of inoperativeness were well founded, this is not a plea to be received with much favor in a Court of Equity.

But, in truth, Complainants' claim of inoperativeness is not well founded; indeed, it is hardly founded at all. It is built up without foundation and purely and simply upon the ground that a certain model of this device, which model was made of wood and soft material, was worked until it became worn so that one of its parts failed to furnish the necessary friction on which its action depended, in part. Thus, at length, this little model failed to perform all its

functions, and then came Complainants' cry of inoperativeness.

Now, even if the *model* had been inoperative, it would have proved little about the operativeness of the device or the validity of the patent; and, even if the device itself had been inoperative, that would have availed Seabury nothing, for his retractor was, as has been shown, anticipated in at least three other mechanisms.

Now, as a matter of fact, even the model is not inoperative. Nevertheless, it is wise to meet your adversary's every wrongful contention, especially when the court below has been misled by one of them, and it is therefore counsel's duty to state briefly the facts concerning the Nordenfeldt model.

With reference to the Nordenfeldt patent Mr. Bartlett says (page 273 of Defendant's Proofs):

> "I have carefully examined this patent, element by element, and all the elements named in Seabury's Claims 1 and 4, are found in this patent, and in their same relation to the other operative parts of the gun, and the operation of the device is identical with the operations of the elements of Claims 1 and 4 of Seabury's patent."

Mr. Dodge (Defendant's Proofs, page 303), says:

> "I am of the opinion, therefore, that this Nordenfeldt patent discloses the combination of the first claim of the Seabury patent."

This evidence has not been rebutted in any particular by Complainants.

To show clearly the action of the Nordenfeldt patent the model was made, and is in evidence. The model was finished in the first part of July (Hough, p. 313, Defendant's Proofs), and put in evidence on October 21, 1893.

The Complainants claim that the model failed to *return* the breech plug to the gun. They admit that even after the model was practically worn out, it still performed all the functions required of it in rotating, unlocking, withdrawing and translating or swinging aside the plug, as well as the operation of locking the plug when it had been returned. In other words, they simply claim that the model failed to push the plug into the gun. Now, it is a well-settled principle of law that "a patent is valid if the invention is applicable to one use, although it is not applicable to all the uses suggested by the inventor" (Phillips *vs.* Risser, 26 F. R., 308), and, since, even according to Complainants, this device showed an entirely new method of *opening* the breech, condensing the three old motions into one, and since it did *open* the breech, it is clear that even if the breech had to be re-closed by hand, as of old, still the device had effected a great saving in time, and the patent was, under the principles of law just quoted, valid.

This Nordenfeldt patent is a complete anticipation of the invention supposed to be contained in claim 1 of the Seabury patent. Even a comparison of the Seabury and Nordenfeldt devices shows that they only differ in some very meagre details of construction. In both cases there is a breech block having a tooth or toothed segment; a rack bar engaging the tooth or toothed segment; a vertical axial bolt or pivot hinged to the breech of the gun; a crank arm secured to the axial bolt and operating such rack; a retractor arm loose upon such axial bolt and locked thereto by a bearing on the bolt coming against such retractor, such retractor being permanently secured to the breech block and hinged to the breech separate from the carrier to move independently of the carrier; a carrier hinged to the breech block, the carrier and retractor being capable of moving together while the breech block is on such carrier; the

movement being transmitted from the retractor to the carrier through the breech block.

In other words, the exact language of claim 1 of the Seabury patent may be read in connection with the Nordenfeldt patent. The only scope which it is permissible to be given to claim 1 in the Seabury patent, so as to avoid the Nordenfeldt patent, is to construe the term "breech-block retractor" to mean the identical construction shown in the Seabury patent, and which identical construction the specification itself shows is the "breech-block retractor."

The Nordenfeldt patent shows an operative device; a device which is almost identical in construction to that of the Seabury patent; a device which accomplishes the entire object sought by Seabury; a device which meets the full terms of claim 1 in the Seabury patent, and a device which completely anticipates such claim unless under the doctrine *ut res magis valet quam pereat* the court construes the claim to cover the exact construction shown in the Seabury drawing.

Complainants' expert witness and attorneys have no rebuttal of Defendant's witnesses quoted above, and merely state that the model is inoperative and immediately jump to the conclusion that the Nordenfeldt *design* is therefore demonstrated as inoperative. Mr. Newbury, page 154, states:

> "The inoperativeness of the said model arises from the fact that there is no means provided for returning the breech block to the breech of the gun otherwise than by the old hand process."

Mr. Newbury, though he testifies that the model is inoperative, yet admits (Complainants' Proofs, p. 164) that he "did not take this model to pieces so as to get every detail of its construction." His statements about this model show his worthlessness as a mechanical expert, and his testimony

in regard to the details of construction of the model is altogether guesswork and valueless as evidence or an expert opinion.

In the Nordenfeldt device, such as shown in the patent No. 7195, of May 17, 1887, the question of the operativeness of the sliding bolt or filling piece, *m*, is entirely a question of friction. This bolt is placed in an oblique guide-way made in the withdrawing arm, *k*, and such bolt is thrown into engagement with the shoulder, l^1. On the reverse movement of the parts being made, this shoulder bears against the bolt or filling piece, *m*, and the latter being prevented by friction from sliding in its guide-way, the motion is transferred through the filling piece to the withdrawing arm, *k*, and through the latter to the breech block which is returned to the breech of the gun.

Now, while it is true that in the model of the Nordenfeldt device, which has been made by the Defendant, this action does not take place readily, it is due entirely to the fact that there is not sufficient friction between the bolt or filling piece, *m*, and the guide-way in the withdrawing arm, *k*. In other words, it is simply a question of friction. Either the filling piece was made a little too small or else it has become worn by constant use of the model. That this is simply a question of friction is easily demonstrated by slipping a thin piece of paper between the filling piece and the bottom of the guide way when it will be seen that the device is fully operative. Since the hearing below, another filling piece, varying almost infinitesimally from the original one, has been made, and it fits the guide-way sufficiently tight to give the required friction. With the second filling piece, which is in all respects like the first, save in the matter of being a little tighter in the guide-way, the Nordenfeldt model is fully operative. So that the defect, if such it be, in the original Nordenfeldt model, is a mere mechanical defect and not a structural defect.

The written directions for operation, printed upon the model, cuts no figure at all. It is merely the opinion of the model-maker as to how he would have the device operated. The model shows the Nordenfeldt device and is operative according to the Nordenfeldt invention; the directions of the model-maker are merely surplusage. If the model will operate according to the Nordenfeldt invention, and it does so operate, it is immaterial that the model-maker has left directions to operate it in some other way.

The bolt, *m*, as indicated in the Nordenfeldt patent and drawings, slides in the dovetail guideways under the action of the stud I^2, and the *oblique* action of the stud across the direction in which the bolt slides, together with the accurate fit of the bolt in its dovetail, gives the required frictional resistance to the bolt against the slipping observed. Speaking of the similar device in the Seabury for locking the driving shaft and the retractor together for the return movement, Mr. Newbury says (p. 145):

> "The particular shape or form of this device is no part of the invention, and so far as the invention of Claim 1 is concerned, *any* form or device, no matter what else it may be, may be employed for connecting the various parts together, is all that is required, so long as some form of means is employed for this purpose."

Such a statement is unquestionably correct from a patent standpoint, and it is noteworthy that the Complainants' expert does not hold the same view of a similar condition in the Nordenfeldt model that he holds in regard to the Seabury; what he regards as immaterial in the latter he regards as the cause of inoperativeness in the former.

The Seabury device, itself, is as obnoxious to the criticism of inoperativeness as is the Nordenfeldt model, and

even more so. In the Seabury device the trip-pin g^9 on the double lever g^{10} is the equivalent of the sliding bolt or filling piece m of the Nordenfeldt device. The projection g^6 of the Seabury device engages the pin g^9 just as the shoulder l^1 in the Nordenfeldt device engages the piece m.

In the latter case, there must be due friction between the piece m and the withdrawing-arm k, and in the former case between the pin g^9 and the projection g^6. In both cases there must be due friction. (See Defendant's Record, Durfee, p. 255; Dashiell, pp. 183, 184.)

The principle of law just laid down in Royer *vs.* Coupe, 29 F. R., 358, is pertinent here. In that case Judge Carpenter says (369):

> "The machinist who constructed that machine was told to build one exactly like the drawings of the patent. * * * That is not the proper way to construct a machine, if you propose to try whether or not it be an operative machine in the sense of the patent law. In building a machine for the purpose of testing it, or for the purpose of using it, if you are building in accordance with the drawings of a patent, or with any other drawings, in fact, which are presented for that purpose, there are very many mechanical devices which will tend to make a machine practical and operative which are within the duty of the mechanic, and do not come within the limits of the inventive art. It was the business of the machinist, who should undertake to construct and to try fairly a machine made after that patent, to put in"

these mechanical devices, even though they were not mentioned in the patent drawings and specifications.

Again, in the same case, at page 370, the learned Judge says:

> "Machines are to be constructed, as I have said before, with the admixture of intelligence. The patent is supposed to describe the machine with sufficient

> accuracy for the purposes of an ordinarily intelligent man who is acquainted with the art of machinery. * * * It does not undertake to describe a piece of mechanism which can be copied as a Chinese can copy and still be operative."

In accordance with this doctrine, it was shown and admitted during the examination of Complainants' expert, Newbury, that even if the bolt was worn so that the model wouldn't work properly, yet a mere latch, a mere detail, requiring no invention, and within the scope of the mechanics business, and so within the doctrine referred to, could be added to the model and make it operative, even in its worn condition.

Had the working parts of the model been made of cast steel, with the bearings of hardened steel, as is the practice in all ordnance construction, the wearing surfaces of the brass bolt, *m*, would not have worn loose as in the model, and had the mere mechanical detail, the latch, been added, the model would have worked.

The opinions of Mr. Newbury and the Complainants on the inoperativeness of this device are as valuable as those of the same gentlemen in regard to the inoperativeness and impracticability (Newbury, pp. 125, 126, 127, 128, of Complainants' Proofs; also 37, 39 and 40 of Complainants' Brief in the Circuit Court) of the Sauvee mechanism, which any one who ever reads current scientific service periodicals would know was the celebrated Canet rapid fire gun, which was the only slotted screw rapid fire mechanism ever fully adopted as the arm of any national service until the U. S. Navy adopted that of the Defendant (Dashiell). This Sauvee or Canet device which this expert and his clients pronounce inoperative and impracticable has been adopted by and is in use in the following countries, viz.: France, Spain, Russia, Greece, Chili, Argentine and Japan.

The criticism about slipping applied to the Nordenfeldt holds for Seabury. The two devices in *every* respect are so much alike that this statement is self-evident.

A tight cartridge case which was somewhat hard to push home, could not be used in the Seabury gun, because it offers resistance to the forward motion of the plug at the very point where the trip-pin is on the point of slipping even without such resistance. The result is slipping of the locking device or trip-pin and jamming of the breech plug. No gun has ever been made according to Seabury's patent in suit, though one has been made by a later patent. The main fault with it is the unavoidable slipping of the trip-pin and the great swing of the lever attached to the driving shaft. Mr. Newbury says this is not excessive, but the inventor Seabury says it *is*. (Complainants' Proofs, p. 83.)

POINT I.

Taking Seabury's claim 1 upon its face value there is manifestly no infringement of such claim by the Dashiell device, because Seabury's claim 1 restricts itself to a retractor "hinged to the breech" and (2) separate from the carrier.

The breech-block retractor of the Dashiell device is not hinged to the breech at all. It is not separate from the carrier. It is hinged to the carrier. It is part of the carrier. When the carrier moves the retractor moves.

In the Seabury device, the retractor and carrier can only move together when the breech block is between them. Considered as an organism the carrier and the retractor move independently, or, as the claim says, they are "separate" from each other, whereas in the Dashiell device they are not

"separate" from each other, but are so intimately connected that when the carrier is moved the retractor moves with it.

On page 83 of their brief in the Circuit Court of Appeals counsel for appellees say:

> "Now, as to the retractor. We must find in the Dashiell mechanism a retractor which is hinged to the breech, *separate from the carrier*, to move independently of the carrier, to draw the breech-block thereinto and push it therefrom, but *capable of moving with the carrier while the breech-block is therein.*"

Here counsel clearly and plainly admit what is obvious namely, that if the Dashiell device is to be regarded as an infringement of claim 1 of the Seabury patent, the Dashiell device must show that the retractor is hinged "separate from the carrier." But, as has been seen in the Dashiell device, the retractor is not hinged "separate from the carrier."

In the argument in their brief following the excerpt noted, there is a labored attempt to show that the Dashiell retractor is hinged to the breech, but no effort is made to show that it is hinged "separate from the carrier." Having admitted that the Dashiell device, to be an infringement, must show a retractor "separate from the carrier," they utterly fail in argument, as they were bound to fail, because it was not a fact, to show that the Dashiell device had such a construction. So that by the admission of counsel as to the construction which the Dashiell device must have to be an infringement of the Seabury patent, and their failure to show that it has such a construction there is a clear inference deducible from the contention of appellees' own counsel that the Dashiell device is not an infringement of the Seabury patent.

Again it may be noted that the retractor is not only "capable of moving with the carrier while the breech block

is therein," which is the fact with regard to the Seabury device, but it is also movable with the carrier whether the breech block be therein or not. So that in two particulars, made essential by appellees' own counsel, the Dashiell device fails to contain the alleged invention of Seabury.

But to overcome this obvious position it is contended on behalf of Seabury, by his expert, that in the Dashiell device the retractor is hinged to the breech, because the retractor though hinged to the carrier when turning on its pivot acts just as it would when hinged to the breech. In the first place, it may be noted that even if this be true the claim not only calls for a retractor hinged to the breech, but hinged to the breech "*separate from said carrier.*" So that even if a hinging to the carrier be a hinging to the breech it is not such a hinging to the breech as is called for by claim 1, in that in the Dashiell device the retractor is not hinged to anything "separate from the carrier," but is hinged to the carrier itself.

An inspection of the Seabury drawing and description shows that the statement in claim 1, that the retractor is "hinged to the breech separate from the carrier," was used advisedly and with full knowledge of its import. As stated in claim 1, the object of this independent hinging is so that the retractor may have a movement independent of the carrier. In all this style of mechanism the carrier is at rest while the retractor is withdrawing or replacing the breech block. This is the necessity of the case in all such devices. The carrier is loose upon its pivot and can only be moved by the interposition of the breech block between it and the retractor.

It is manifest, not only from the Seabury construction itself and the description, but from the language of claim 1, that he regarded this separate hinging of the retractor and carrier as essential to the obtaining the independence of

movement of the two. The language of the claim in this regard is as follows: "hinged to the breech separate from said carrier to move independently of said carrier." The infinitive form "to move" is used here as showing purpose or result. That is, the claim states that the retractor is "hinged to the breech separate from the said carrier," in order that or so that it may "move independently of said carrier." It is obvious from the verbiage of the claim that the patentee regarded the separate hinging of the retractor and carrier as essential, so that they might have the independency of movement.

As, therefore, the claim clearly sets forth the separate hinging and the reason for it; as counsel for the appellees admit that such separate hinging must be found in the Dashiell device; and as such separate hinging is not found in the Dashiell device, it seems perfectly clear that the Dashiell device cannot be regarded as an infringement of claim 1.

In the Dashiell mechanism the retractor is not hinged to the breech, but to the tray.

This change of location of the hinge is not merely colorable. It is changed for an important purpose, and hinging the retractor to the carrier results in decided advantages, which are:

(1.) By having the tray or carrier hinged to the breech by its own hinge pin—a pin whose sole function is to act as the carrier hinge—the entire mechanism if disabled can be quickly removed from the gun by withdrawing the breech plug on the carrier, pulling out this hinge pin and moving away all parts together—the work of five seconds. A new and complete mechanism can then be put on the gun in the same time, and the firing continue. This arrangement is a *sine qua non* for breech mechanisms and is a requirement by ordnance experts everywhere.

That this condition may obtain the retractor must belong to the carrier *not* to the breech, be hinged to the carrier and not to the gun.

(2.) It is absolutely necessary in the Dashiell device for the rack bar to move *below* the hinge axis of the retractor, because the center of the right-hand tooth of the rack bar must come in the same vertical line as this axis of the retractor or the retractor and operating lever cannot swing together. This arrangement precludes the retractor from hinging to the gun as the rack in the carrier could not then be placed exactly below it,

Were the hinge pin of the carrier and retractor made one and turned in lugs on the gun as in the Seabury, Dashiell would have the great disadvantange of these extra parts (lugs and screws) to be manufactured, would lose the first advantage named (easy removability of entire mechanism) and would require as great an angle of swing aside of the breech plug to clear the breech as Seabury. (The Dashiell device requires 90° of swing, the Seabury 150°, to clear the opening in the breech. See models.)

To remove the Seabury mechanism from the gun and put on a new one, it is necessary to move not only the carrier and plug, but the crank arm on top the hinge pin, and the retractor and its connections, and fit all together again when the new mechanism is to be put on.

Thus, Seabury has in the most precise way limited his monopoly on the retractor to one having an arm *hinged* to the breech, and Dashiel having, for proper and advantageous purposes, hinged his retractor arm elsewhere, should be given the benefits of such change, while Seabury, under the patent laws, must be limited to the construction he has seen fit to claim.

In other words, Seabury adopted the operative means of

Nordenfeldt, Farcot, and Canet—that is, the revolution of the driving shaft, and to do this he had to hinge his re-retractor to the breech, and as the carrier had also to be hinged to the breech, he necessarily had to make his retractor "separate from said carrier," and not only by this necessity, but by the express words of his claim, he has limited himself to this construction. The operative means in the four patents of this class prior to Dashiell are wholly absent from the latter's device, and an entirely different operative means is employed. This new operative means will be found in the intimate connection of all the actuating parts, the bell crank, the rack bar and breech plug with the actuating lever; and Dashiell, by the discovery of this new means, and by the introduction of the novel and highly beneficial arrangement of "shifting centres of action," was able to attach his retractor to the carrier with the advantages already described.

The retractor is held to the carrier by the two bolts, 21 and 17.

This difference may be more clearly illustrated in the models. Swing the Seabury carrier away from the gun while the plug is locked in place. Work the lever carefully and the retractor will operate as before. Do the same with Dashiell's, *if possible*, or remove the carrier, and the whole mechanism goes with it, so that the retractor in the Dashiell is not separate from or independent of the carrier.

Seabury has, therefore, of his own motion, limited himself to a construction in which the retractor must be "hinged to the breech" and "separate from the carrier," and having so limited his claim and having had his claim with those limitations allowed by the authorities of the Patent Office and not having seen fit to surrender, he is bound by the limitations, and under our statutes it is not within the power of the court to relieve him from these lim-

itations voluntarily assumed. It is his province to make his own claim and his privilege to restrict it.

Fay *vs.* Cordesman, 109 U. S., 408.

> "It may be observed, before concluding this opinion, that the courts of this country cannot always indulge the same latitude which is exercised by English judges in determining what parts of a machine are or are not material. Our law requires the patentee to specify particularly what he claims to be new, and if he claims a combination of certain elements or parts we cannot declare that any one of these elements is immaterial. The patentee makes them all material by the restricted form of his claim."
>
> Water Meter Co. *vs.* Desper, 101 U. S., 332 (337).

In Burns *vs.* Meyer, 100 U. S., 671 (672), the claim of the patent was:

> "As a new article of manufacture, a side-saddle tree, having the side bars and *seat made separate* and *then united* substantially as and for the purpose shown and specified."

The Court said:

> "The defendants' side-saddle tree * * * does not have 'the side bars and the seat made separate and then united.' On the contrary, tough strips of wood, steamed and bent to a proper shape, are attached to the tree, as a part thereof. * * * The seat is stretched over these strips or side rails. It is obvious that the seat, in this case, cannot possibly be constructed separately from the side bars. They must be united in one construction, forming a complete tree.
>
> "It is well known that the terms of the claim in Letters Patent are carefully scrutinized in the Patent Office. Over this part of the specification the chief contest generally arises. It defines what the Office, after a full examination of previous inventions and

the state of the art, determines the applicant is entitled to. The courts, therefore, should be careful not to enlarge, by construction, the claim which the Patent Office has admitted, and which the patentee has acquiesced in."

A case which seems to be parallel with that at the bar, as involving a change in the place of connecting one of the elements mentioned in the claim, is Brown *vs.* Stilwell and Bierce Mfg. Co., 37 F. R., 731, where the Circuit Court of Appeals for the Sixth Circuit passed upon the question of infringement where the complainant's claim was for "a live steam feed water purifying or heating apparatus D *connected to the boiler* by means of, &c., &c., substantially as set forth." The defendant used the same apparatus, but *connected it to the steam pump.* The Court says:

"As the patentee has expressly limited himself to a connection *with the boiler*, he has given to the defendant below, and to the world, so far as he is concerned, the right to make the connection at any point outside the boiler and the steam dome without infringing his patent. This rule in the construction of patents is so well established as hardly to need authority. One of the leading cases is that of Keystone Bridge Co. *vs.* Phœnix Iron Co., 95 U. S., 274. In that case the patentee claimed an invention for wide and thin drilled eye bars applied on edge for use in the lower chords of iron truss bridges. The alleged infringement was round or cylindrical bars, flattened or drilled at the eye for the same use. It was held that as the patentee had specified wide and thin bars in his claim, he was limited to that description, although the same function was performed by the alleged infringing devices."

Mr. Justice Bradley said (page 278):

"When a claim is so explicit the courts cannot alter or enlarge it. If the patentees have not claimed the whole of their invention, and the omission has been

the result of inadvertence, they should have sought to correct the error by a surrender of their patent, and an application for a reissue. They cannot expect the courts to wade through the history of the art, and spell out what they might have claimed, but have not claimed. Since the Act of 1836 the patent laws require that an applicant for a patent shall not only, by a specification in writing, fully explain his invention, but that he 'shall particularly specify and point out the part, improvement, or combination which he claims as his own invention or discovery.' This provision was inserted in the law for the purpose of relieving the courts of the duty of ascertaining the exact invention of the patentee by inference and conjecture, derived from a laborious examination of previous inventions, and a comparison thereof with that claimed by him. This duty is now cast upon the Patent Office. There his claim is, or is supposed to be, examined, scrutinized, limited, and made to conform to what he is entitled to. If the Office refuses to grant him all that he asks, he has an appeal. But the courts have no right to enlarge a patent beyond the scope of its claim as allowed by the Patent Office, or the appellate tribunal to which contested applications are referred. When the terms of a claim in a patent are clear and distinct (as they should always be), the patentee, in a suit brought upon the patent, is bound by it."

(Merrill *vs.* Yeomans, 94 U. S., 568.)

"It is the duty of the Patent Office to secure the correct statement of the claims before it allows the issue of the patent. The claim * * * once settled in its terms by their (Patent Office authorities) decision, the courts will not disturb it either by interfering with its language or by narrowing or enlarging it by construction."

(Robinson, § 538.)

"It is only where the language of the patent fails to define with precision or to describe with clearness that any especial exercise of the interpretative power be-

comes necessary, and it must then be employed for the removal, not the creation, of ambiguities, and for the erection, not the destruction, of limitations to the inventor's claim."

(*Ibid*, 738.)

"In thus considering the claims of the patent by its descriptive portions, the scope of the claims may often be restricted, but can never be enlarged. To the same effect see Yale Lock Company *vs.* Greenleaf, 117 U. S., 554."

(Robinson, 743.)

In Snow and others *vs.* Lake Shore & M. S. Ry. Co. (Circuit Court, N. D. New York, December 4, 1883), Wallace, J., says:

"Although the complainant's patent of June 11, 1872, suggests the principal and the most valuable parts of the combination found in the defendant's steam bell-ringer, the plain and explicit language of the specification requires a construction of the first claim which will enable the defendant to escape liability as an infringer. The first claim must be limited to a combination in which the piston and piston-rod are detached from each other. The patentee doubtless considered that the detachment of the piston and piston-rod would assist materially in effecting one of the two expressed objects of his invention, viz., the prevention of leakage of steam. To prevent the escape of steam around the piston-rod, he proposed to confine the steam behind the piston, instead of introducing it into the cylinder in front of the piston, as was done in his earlier invention. Accordingly he located the steam passage behind the piston, and adopted a tightly-fitting piston, and in order that the piston might remain tight, he adopted a detached piston-rod to relieve the piston from lateral strain. The specification states that

'The piston is disconnected from its rod to prevent any lateral strain being communicated to it, thereby decreasing to some extent the wear of the piston in the cylin-

der;' and further, 'if the piston is closely fitted it will wear a long time with very little leakage, and what there may be will be caught in the annular grooves in the side of the piston and passed at once through the exhaust passages, thus preventing any leakage through the piston-rod.'

The drawings show a detached piston-rod, and all the co-operative devices are conformed and adjusted to a detached rod, such as the long sleeve in the cylinder to guide it, and the collar on the end of the rod to limit its movements. It is impossible to ignore the particular construction of these two parts which is thus pointed out as material. As the defendant's bell-ringer does not contain such a piston or piston-rod, infringement is not shown. The bill is therefore dismissed."

This last case is on all fours with the present case.

"Evidently, the claim must he construed in connection with the explanations contained in the specification, and when viewed in that light, it is quite clear that it should receive a more restricted construction than was given to it in the charge of the court. Special devices are described as combined and arranged in a particular manner, and operate only in a special and peculiar way for a special purpose, and to effect a special result."

Turrill *vs.* Railroad Co. (1863), 1 Wall., 491, 511.

"Since the act of 1836 the Patent Laws require that an applicant for a patent shall not only by a specification in writing fully explain his invention, but that he 'shall particularly specify and point out the part, improvement, or combination which he claims as his own invention or discovery.' This provision was inserted in the law for the purpose of relieving the courts from the duty of ascertaining the exact invention of the patentee by inference and conjecture, derived from a laborious examination of previous inventions, and a

comparison thereof of that claimed by him. This duty is now cast upon the Patent Office. There his claim is, or is supposed to be, examined, scrutinized, limited, and made to conform to what he is entitled to. If the Office refuses to allow him all that he asks for, he has an appeal. But the courts have no right to enlarge a patent beyond the scope of its claim as allowed by the Patent Office, or the appellate tribunal to which contested applications are referred. When the terms of a claim in a patent are clear and distinct (as they always should be) the patentee, in a suit brought upon the patent, is bound by it. (Merrill *vs.* Yeomans, 94 U. S., 573.) He can claim nothing beyond it. But the defendant may at all times, under proper pleadings, resort to prior use and general history of the art to assail the validity of a patent or to restrain its construction. The door is then opened to the plaintiff to resort to the same kind of evidence in rebuttal; *but he can never go beyond his claim.* As patents are procured *ex parte*, the public is not bound by them *but the patentees are.* And the latter cannot show that their invention is broader than the terms of their claim; or if broader, they must be held to surrender the surplus to the public."

"The law does not permit such enlargements of an original specification, which would interfere with other inventors who have entered the field in the meantime, any more than it does in the case of reissues of patents previously granted. Courts should regard with jealousy and disfavor any attempt to enlarge the scope of an application once filed, *or of a patent once granted*, the effect of which would be to enable the patentee to appropriate other inventions made prior to such alteration, or to appropriate that which has, in the meantime, gone into public use."

Railway Co. *vs.* Sayles (1878), 97 U. S., 554, 565.

"Perhaps we have gone more minutely into the evidence relating to the progressive improvements in this instrument than was necessary to show that the claim of the patent was not more restricted than it should

have been. The court ought not to be called upon to explore the entire history of an art in order to ascertain what a patentee might have included in his patent had he been so disposed."

James *vs.* Campbell (1881), 104 U. S., 350, 370.

"Some persons seem to suppose that a claim in a patent is like a nose of wax which may be turned and twisted in any direction, by merely referring to the specification, so as to make it include something more than, or something different from, what its words express. The context may, undoubtedly, be resorted to, and often is resorted to, for the purpose of better understanding the meaning of the claim; but not for the purpose of changing it; and making it different from what it is. The claim is a statutory requirement, prescribed for the very purpose of making the patentee define precisely what his invention is; and it is unjust to the public, as well as an evasion of the law, to construe it in a manner different from the plain import of its terms. This has been so often expressed in the opinions of this court that it is unnecessary to pursue the subject further. (See Keystone Bridge Co. *vs.* Phoenix Iron Co., 95 U. S., 274, 278; James *vs.* Campbell, 104 U. S., 356, 370.")

White *vs.* Dunbar (1886), 119 U. S., 47, 52.

"There is no magic in words; and above all in patents. The court looks through the whole patent and specification, in order to ascertain what the thing claimed and patented is; whether it is for an entirety, or for various distinct improvements, capable of a distinct operation and independent use in the same machine, or for both; or whether it is for a combination of two or more things in a particular machine to produce a given result; or for a simple or single improvement in a particular machine; or whether it is for any one or more of them. There is no artificial or universal rule of interpretation of such instrument beyond that which common sense furnishes, which is to construe the instrument as a

whole, and to extract from the descriptive words and the claims what the invention is which is intended to be patented, and how far it is capable to exact ascertainment, and how far it is maintainable in point of law, supposing it clear from all ambiguity."

"Now, looking at the present patent, it seems to me impossible to entertain any real doubt as to its true interpretation. It is, as the words of the claim state it to be, for a simple thing—'an improved rib.' Call the improvement an entirety, or a combination, as we may please, it is still a patent for 'an improved rib,' and nothing more."

Carver *vs.* Braintree Mfg. Co. (1843), Story, J., 2 Story, 432 (446).

"And as, on everything in the case, it is questionable whether he could have intended to patent anything except an improvement on what before existed, I do not think it just to place a broader construction on his language than the whole subject-matter, the description and nature of the case seem to indicate as designed. These are all to be looked to; and no fancied construction, traveling too far, on a new and doubtful ground, is to be adopted; rather what is natural and clear, considering what already exists on the same subject."

Smith *vs.* Downing (1850), Woodbury, J., 1 Fisher, 64, 69.

"If he has discovered much and discloses little; if there has been revealed to him one of the arcana of nature and he communicates to the world only one or more of its derivatives and secondary truths he patents no more than he has proclaimed. He will not be allowed afterwards, when the extent of his rights shall be a subject of controversy, *either by expanding into a general expression what was limited before in a particular form*, or by tracing out for us the line that leads back from consequences to remote causes, to initiate us, inferentially, into the radical mystery of his invention, *and then argue that he had described it by implication from the first*, and so claimed ownership of it in his patent."

Detmold *vs.* Reeves (1851), Kane, J., 1 Fisher, 127.

"We now come to the last and most difficult question in the case—that of infringement.

"This involves a comparison of the invention of Sickels *as claimed in the patent* (Court's italics), with the machine actually used by the defendants. The comparative value of the complainant's invention and those patented to Corliss is a question not relevant. Nor need we inquire whether the defendants infringe what Sickels *might have claimed* (Court's italics) as his invention, if the specification had been drawn up by the very able and learned counsel for complainant with their present knowledge of the art. *The subjects to be compared are not the black model with such a generalization of its principle as may now be made, and the machine of the defendant.* We must take the specification of plaintiff's patent, and see what he *there* (Court's italics) claims to have invented, and see if the machine used by the defendants has infringed any of these claims as set forth."

Sickels *vs.* Gloucester Mfg. Co. (1856), Grier, J., 1 Fisher, 222, 228.

"It is quite true that in the construction of a claim reference is to be had to the descriptive portion of the specification or to any other portion of it, to ascertain the true interpretation of the claim. But where the claim is such as to leave no room for construction, where it is clear and explicit, and especially where there is nothing in the specification which shows that the patentee did not mean just what the plain language of the claim imports, we are not aided by and have no need of aid from such specification."

Rich *vs.* Close (1870), Woodruff, J., 8 Blatch., 41, 44.

"While patents should be liberally construed, they should not be so construed as to enable patentees to reach out and cover every improvement or invention which, after seeing, they conclude they might have embraced and included within their patent; but which was not so embraced and included."

Trader *vs.* Messmore (1875), Swing, J., 7 O. G., 385, 386.

"In construing a patent, it is first pertinent to ascertain what, in view of the prior state of the art, the inventor has actually accomplished; and this having been found, such construction should be given as will secure the actual invention to the patentee, *so far as this can be done consistently with giving due effect to the language of the specification and claims.*"

Van Marter *vs.* Miller (1879), Wallace, J., 15 Blatch. 562, 563.

"I am unable to agree with the ingenious counsel of the complainants in his construction of the principal claims of the patent in controversy. 'Nebulous,' as they are, they ought not to be expanded constructively beyond the limitations which the patentee has imposed upon them, so as to cover subsequent improvements in an art in which the invention claimed was, at most, only a step in advance. *The patentee's exclusive right is enforceable only within the limits of his own definition of it.* What he has then not distinctly claimed, much more what he has not claimed at all, cannot be injected into his claims, even though that may be necessary to save his patent."

Words used in the specification have their usual meaning unless the contrary appear.

Root *vs.* Lamb (1881), 19 O. G., 937.

The patentee is held strictly to the language of the claims.

Delong *vs.* Bickford (1882), 13 F. R., 32.

"The language of the claim is plain. The court cannot enlarge it by construction. If it fails to cover all the patentee intended to secure his remedy was through recourse to the statute providing for reissues."

Becker *vs.* Hastings *et al.* (1884), 22 Fed. Rep., 827, Butler, J.; McKennan, C. J., concurring.

"The general statement in the patent of the essential features of the several inventions which are the subject of the patent, and the very guarded terms of the disclaimer at the end of the description, countenances the argument that these claims were intended to be as broad as their literal terms.

"*The claim of the inventor in letters-patent must be construed according to its terms, and when its import is plain, resort cannot be had to the context for the purpose of enlarging it.* A more liberal rule is indulged frequently when it is necessary to restrict or narrow the ordinary import of the language in order to secure the real invention of the patentee and preserve the claim from destruction. But the language of the Supreme Court in White *vs.* Dunbar (119 U. S., 47, 52), is applicable to both classes of cases."

Railway Register Mfg. Co. *vs.* Third Avenue R. R. Co. (1887), Wallace, J., 42 O. G., 379, 381.

"It is also true, that it is the duty of a court to give letters-patent for inventions, a construction which shall sustain the just claims of the inventor, and shall relieve him from the injurious effects of an imperfect description of the invention, which he had attempted to secure. *If, however, the patentee has plainly pointed out, and by his description, has established the boundaries of his invention, they cannot be enlarged by construction.* Recognizing this principle, *the question is not what the patentee might have applied for, but what did he apply for and receive.*"

Patent Clothing Co. *vs.* Glover *et al.* (1887), Shipman, J., 24 Blatch., 542, 545.

"Doubtful expressions may be subject to construction, but where the language employed is clear and unambiguous, it must speak its own construction in the specification of a patent as well as in any other grant issued by public authority. Intention in every case, it may be admitted, is the primary rule of construction, but language invoked to support a particular theory

must be such as is fit, when it is compared with the whole instrument, to express the imputed intention, else the theory in question cannot be supported, as courts of justice cannot legislate nor can they add to a grant or contract any stipulation or condition which it does not contain. Consequently, the theory of the complainant, that the sentence under consideration warrants the conclusion that the claim of the patent includes low as well as high heat, must be overruled. (Green *vs.* Wood, 7 Q. B., 178; Pott, Dwarris, 199, 200.")

Mitchell *vs.* Tilghman, 19 Wall., 287, 395.

Upon the doctrine of these cases it is maintained that Seabury, having limited himself to claiming a retractor hinged to the breech, Dashiell, who has properly and wisely, and not colorably, hinged his retractor arm elsewhere, is not an infringer.

So Seabury, having limited himself to a retractor separate from the carrier, Dashiell, who has by the use of inventive faculty and the adoption of the principle of shifting centres of action, been able to connect his retractor to his carrier, is not an infringer.

POINT II.

Claim 1 is for an incomplete combination, an essential element being lacking.

As set out in the patent, the object of the Seabury invention is to provide a device which will unlock the breech block, withdraw it from the gun, and turn it to one side. The carrier is the means by which the breech lock is turned to one side; the retractor is the means by which the breech block is withdrawn from the gun, and there is a third device which may be termed a "rotator," which unlocks the breech

block from the gun. The reverse movement of these three in due order returns the breech block to its place within the breech of the gun. It is clearly manifest that all three of these devices and their functions are necessary to form a complete operation. The omission of a single one renders the opening or closing of the breech of the gun impossible. Unless the breech block be unlocked the retractor cannot withdraw it from the breech. And unless withdrawn from the breech by the retractor the carrier cannot turn it to one side. It would be useless to turn the breech block to the breech unless the retractor insert it. And it would be useless for this to be done unless the "rotator" turn the breech block so as to lock it in position.

That these several parts co-act not upon one another, but upon a common object; and also that they act successively and not together, would make them none the less the elements of a combination. (See Stutz *vs.* Armstrong (1884), 20 Fed. Rep., 843; Stilwell and Bierce Mfg. Co. *vs.* Cincinnati Gas Light and Coke Company (1875), 1 Bann. and A., 610; Railway Register Mfg. Co. *vs.* Broadway and Seventh Avenue R. R. Co. (1884), 22 Fed. Rep., 655; Hoe *vs.* Cottrell (1880), 1 Fed. Rep., 597; Herring *vs.* Nelson (1877), 14 Blatch., 293; Birdsall *vs.* McDonald (1874), 1 Bann. and A.)

This being so, and these three features being necessarily arranged so as to produce the desired result, it is essential that all three of them should appear in a claim. Less than all three will not produce a result of any kind.

An inspection of claim 1 shows that the device for unlocking and locking the breech block is not contained in this claim. This claim, therefore, is for less than an operative combination, and is invalid. In Tarrant *vs.* Duluth Lumber Co. (1887) 30 Fed. Rep., 830, Judge Nelson held a patent invalid because an element essential to the functions of the other elements was omitted from the claim. Now the

mechanism for locking and unlocking the breech block in the Seabury device consists of a spindle carrying an arm which operates a slide engaging teeth upon the breech block. Upon this same spindle is loosely sleeved the retractor and on the spindle is a projection for moving the retractor. Unless, therefore, the mechanism for locking and unlocking the breech block be put into operation the retractor will not be operated. It is therefore manifest that the operation of the locking and unlocking mechanism is essential to the operation of the retractor. For this reason also the first claim is incomplete in that there is omitted from it an element which is essential to the operation of the elements contained in it.

POINT III.

Dashiell's combination does not include all the elements in the Seabury combination, and, therefore, does not infringe.

In this connection we must first recur to the important question:

> "In view of the state of the art, what construction is to be given to Seabury's claim 1; of what elements, devices or constructive details has he been granted a monopoly?"

The general principle of law, as repeatedly laid down by the courts of this country in similar cases is, that

> "The principle being old, and the invention a mere improvement in a well-known class of manufactures, and the claim being for a combination of designated component parts, 'all as shown and described,' the patentee is limited to the particular construction shown in the specification."

This language was slightly varied in Adams *vs.* Bellaire Stamping Co., 28 F. R., 360, in which the court said:

> "Where the prior state of the art is such that the field of invention is limited and circumscribed, not admitting of a great original discovery, a patentee must be confined *strictly* to the claim he makes."

So, in Murbarger *vs.* Baker, 46 F. R., 286, where, as in this case, the improvement of the patent was but one in a long series of similar improvements having precisely the same object in view, the court said:

> "The rule is well established that in such cases the patentee must be restricted to the *form, arrangement* and *purpose* described and claimed."

Now let us examine Seabury's claim 1 by the light of these decisions.

His claim is for—

> "The combination, with a breech-loading cannon and a breech block for the same, which is withdrawn in a rearward direction, of a breech-block carrier hinged to the breech, and a breech-block retractor hinged to the breech separate from said carrier to move independently of said carrier, to draw the breech block thereinto and push it therefrom, but capable of moving with said carrier while the breech block is therein, substantially as herein set forth."

Analyzing this claim, we find it to be for a "combination" of the following elements (see also Complainants' Brief in the Circuit Court, page 24), viz.:

1. A breech-loading cannon.
2. A breech block for the same, which is withdrawn in a rearward direction.

3. A breech-block carrier hinged to the breech ; and

4. A breech-block retractor, which is

(*a*) hinged to the breech,

(*b*) separate from said carrier

(*c*) to move independently of said carrier to draw the breech block thereinto and push it therefrom, but

(*d*) capable of moving with said carrier while the breech block is therein ; all

(*e*) substantially as herein set forth.

The first three of these elements are eliminated from the controversy in suit; all are old, and disclaimed by all the litigants. The contention is as to the sort of (4) " breech-block retractor," of which Seabury has been granted a monopoly.

What do the words " breech-block retractor," as used in claim 1, mean? To answer this question we must turn to Seabury's specifications.

> " Where the ' claim ' immediately follows the description, it may be construed in connection with the explanations contained in the specification, *and must be restricted accordingly.*"

(See 1 Wallace, 491 ; 15 Howard, 336 ; 4 F. R., 635, and 18 Blatch, 357.)

> " The claims are based on the description, inventions secured to the patentee being always identical with or contained in that communicated to the public ; and therefore, *the interpretation given to claims must limit them to the inventions previously described, however wide and comprehensive they might otherwise appear.*"

> "*General words in a claim are limited by particular words in a specification.*"
>
> Knox *vs.* Murtha, 9 Blatch, 205; Robinson, § 743.
>
> "The patent 'claim' must be construed in the light of the specifications."
>
> 13 F. R., 903, and 9 Biss., 251.

Such is also the view taken in complainant's brief in the Circuit Court, page 50:

> "*It must be borne in mind that in the Seabury patent the retractor is not merely the arm which is connected with the breech block, it is also composed of the other parts which cooperate with it.*"

Turning therefrom to Seabury's patent, we find that he there twice defines, with accuracy and precision, his "breech-block retractor." First, at line 88, page 2, of the specifications, he says:

> "The arms G, the ring G^1, and the above described connections between them constitute what may be termed a 'breech-block retractor.'"

And, secondly, at line 45, page 4, of the claims, he says that this breech-block retractor consists

> "Of first, an arm; second, a hinge by which said arm is connected with the breech of the gun; third, a ring screwed into the breech block, and fourth, a sliding connection between the said arm and ring."

Now, taking up in succession these four components of the Seabury retractor, it will be observed:

FIRST.—AS TO THE ARMS G.: An arm, as the main part of the retractor, is common to the mechanisms of Sauvee, 9453; Nordenfeldt, Seabury and Dashiell; in other words, to all such mechanisms which are intended for use with

small calibre guns, where a light breech block is used, permitting the mechanism to be geared up for speed, or rapidity of working; and in all the recent mechanisms of this class, designed for use with large calibres, having heavy breech blocks, where it is necessary to gear up for power at the expense of speed, there is found the cogged wheel or arc, the well-known mechanical equivalent of the lever.

But though all four of these devices have this common lever, in each one of them it has its own peculiarities of form, construction and union with other parts, upon which peculiarities patent rights have been and may still be granted.

Now, taking up these arms in the Seabury and Dashiell mechanisms, and comparing them *vis-à-vis*, under three heads of (*a*) form, (*b*) construction, and (*c*) union with other parts, we shall find that in each of these particulars the arms of the Dashiell mechanism differ substantially from those of the Seabury device; that in none of them does Dashiell infringe Seabury and that in each of them Dashiell has shown inventive merit, entitling him to the patent he has been allowed.

(*a.*) Form The Seabury arm is an ordinary lever of the third class, having the power between the weight and the fulcrum, thus:

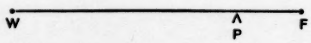

The Dashiell arm is a bell-crank lever, having the weight, power and fulcrum respectively at the apices of a triangle.

Where the distance from weight to power is greater than that from weight to fulcrum, the advantage of substituting this bell-crank lever is considerable.

Advantages of Bell-Crank Lever.

The principle of a bell-crank lever is that the directions of motion of the power and weight are at right angles to each other. When the hand lever has swung through the arc necessary for unloading the breech plug it is almost in line with the axis of the gun (Fig. 4) of Dashiell's patent, or the line of application of its power is across the breech. The direction in which the weight or breech plug is to travel is in line with the gun's axis, so that the simplest of the mechanical powers to connect the lever acting across, with the plug moving in line with the breech, is the bell-crank lever. Besides this, the pivot of the hand lever, which passes through the bell-crank and is supported by it, has a good yoke-form of connection with both the breech plug and the tray, and is firmly held in place while the breech plug is being revolved. So that the withdrawing device of the Dashiell gun is not only a bell-crank lever to retract the the plug, but a yoke support and brace for the pivot of the hand lever.

(*b.*) Construction. The Seabury device uses two arms, GG. Concerning their construction, the Seabury specification says (line 53, p. 2):

> "These arms are secured together and kept at a proper distance apart by means of an interposed sleeve *g* and a pin *g'* passing through said sleeve and fastened by a nut, which makes the said arms practically a single-forked arm."

So that there are 5 parts, viz., 2 arms, 1 pin, 1 sleeve and 1 nut.

The Dashiell arm is the simple, uncomplicated, bell-crank lever. Clearly the construction of the Dashiell arm has more than the necessary merit and originality to bring it

within the doctrine of Gould *vs.* Rees, 15 Wallace, 187, in which the Supreme Court held that—

> "Where a defendant, in constructing his machine, omits entirely one of the ingredients of his combination without substituting another, he does not infringe."

And it is exactly covered by the doctrine of Schumacher *vs.* Cornell, 96 U. S., 549 (554), that—

> "A combination is always an entirety. In such cases the patentee * * * must stand by his claim as he has made it. If more or less than the whole of his ingredients are used by another, such party is not liable as an infringer, because he has not used the invention or discovery patented."

Further, it is to be observed that the reduction by Dashiell of the two Seabury arms to one is no merely colorable variation in form. Even if it were colorable, it would still be at least a mechanical improvement over Seabury, for it has great advantages in the matter of ease of construction, weight, simplicity and cheapness; but in point of fact, Seabury was obliged to use the two arms, and could not have replaced them by one, unless that had been a forked arm of substantially the same shape as the present double arm. But Dashiell took a new step in the art, which enabled him and his successors to use the single arm. Up to the time of Seabury's invention we were using a firing device attached to the centre of the rear face of the breech block, and Seabury had to fork his arms in order to straddle this firing attachment. But Dashiell (see his patent specifications) devised and patented a new firing arrangement which enabled him to dispense with the "straddling," and to use one arm. So that Dashiell, by means of the inventive faculty, was able to improve and greatly simplify one of the Seabury elements, the "retractor," and that element being

old, Dashiell is entitled to the rights granted him by the Patent Office, and is not an infringer.

(*c.*) *Union of the arms with the other parts of the mechanisms.* This should be considered under two heads (*ac*), the union at the axial or fulcrum end, and (*bc*) the union at the radial or weight end.

(*ac.*) *Union of the arms at their axial or fulcrum ends.*

Here we should consider, first, the place of union (or the part of the mechanism to which the union is made), and, second, the manner or details of that union. As to the place, the Seabury specifications state (line 51, page 2) that the arms are hinged to the spindle "E," which is the driving shaft passing through the breech. So the claim itself especially claims a breech-block retractor "hinged to the breech." Hence, the Seabury arm is hinged to the breech. The Dashiell is not, but is hinged to the tray or carrier, with very decided advantage, as will be shown later in this brief. Therefore, these arms differ as to the *place* of the union of their axial ends with the other parts of the mechanisms. As to the manner of this union, the Seabury arms are joined to the breech by means of two sleeves on the ends of their respective arms, through which sleeves there passes a driving shaft or pintle. In the Dashiell mechanism the union is made in more simple fashion, by merely punching a hole in the arm, through which a bolt passes and is screwed into the carrier or tray. Thus, in both the place and the manner of the attachment of the axial ends of the arms, there is a difference between the two mechanisms—the difference as to simplicity being in favor of Dashiell.

"That a patent for a combination of the old elements cannot claim any union of one element with another, except the union invented and described. See Larabee *vs.* Cortlan, 3 Fisher, 5; Taney, 180."

Robinson on Patents, § 527 (N. 2).

Now as to (*bc*). *The union of the radial or weight ends of the arms to the breech blocks.*

In no part of these two mechanisms is the difference between them or the originality and simplicity of the Dashiell structure more plainly shown than in the case of this union to the breech block.

The Seabury specification says (line 66, p. 2):

> "The connection shown between the said arms and the breech block consists of (1) a flanged ring G^1, which is screwed, as shown at g^2, Figs. 2, 4, 5 and 6, into a concentric cavity in the rear of the breech block; (2) horizontal slide ways g^3 fast upon the rear of said ring; and (3) slides g^4 fitted to slide on said slide ways and pivoted by (4) pins g^5 to the ends of said arms."

The earnest attention of the Court is asked to this description, to the figures illustrating it and to the very complicated character of this method of union. In making this connection Seabury uses 1 flanged ring G^1, 2 slides g^4, 2 pins g^5, and 2 nuts.

In all *seven* extra pieces. In the Dashiell mechanism there is not even *one* extra piece. There is a toe or stud turned up on the end of the lever arm, and this hooks into a vertical groove in the rear of the breech block. Clearly, the block can turn round and round, and the toe will simply follow the groove; but draw the toe to the rear or push it to the front, and the breech block necessarily moves with it. A simpler construction could not well be imagined. Clearly, it is a long step in advance of the cumbrous attachment of Seabury's.

Summarizing, therefore, as to these lever arms, we find that in every particular in which they can logically be considered and compared, viz., (1) form, (2) construction, (3) union at the axial end, (4) union at the radial end, and (5) number of parts, there is a wide difference between them,

the advantage being in every instance in favor of the Dashiell device.

So much for the construction of the *arm*. This, however, is but one of the four components of the Seabury device (see his specifications, line 88, p. 2, and line 45, p. 4). There still remain to be considered—

> (2) "The hinge by which said arm is connected with the breech of the gun; (3) the ring screwed into the breech block, and (4) the sliding connection between said arm and ring."

Let us take these up in succession.

SECOND.—THE HINGE. This has been considered under the heading "(*ac*), Union of the Arms at their Axial or Fulcrum Ends," on page . of this brief. It was there shown that, both as to the manner and place of union, the Dashiell arm differed from that of Seabury; in other words, the two mechanisms differ materially both as to the form and location of this second element, the hinge. It may, however, be noticed here that the two hinges also differ as to their *functions*, one performing the duties of a simple hinge, the other those of a hinge spindle and a driving shaft combined.

THIRD.—THE RING SCREWED INTO THE BREECH BLOCK. About this there is little to say, except that the Dashiell device does not have and does not need this ring. Neither does he use any other part or piece to replace it. He has, by his ingenuity, been able to entirely do away with it. It is an essential element and ingredient of the Seabury device and as such is specifically claimed. *Dashiell omits it, and does not replace it by any mechanical equivalent, and this alone is sufficient to acquit him of the charge of infringing Seabury's first claim*, for—

"Where a defendant, in constructing his machine,

omits entirely one of the ingredients of the combination without substituting another, he does not infringe."

Schumacher *vs.* Cornell, 96 U. S., 549, 554.

"If more or less than the whole of the ingredients are used by another, such party is not liable as an infringer, because he has not used the invention or discovery patented.

The claims of the patent (the complainant's) mention two jets. The closet of the defendant has only one jet. It has been repeatedly held that a combination is an entirety, and that a patentee cannot abandon a part and claim the rest, but he must stand by the claims as he has made them. If more or less than the whole of his ingredients are used by another, such party is not liable as an infringer, because he has not used the invention or discovery patented."

Smith *vs.* Putnam, 45 F. R., 202.

"The claims of the patents sued on in this case are claims for combinations. In such a claim, if the patentee specifies any element as entering into the combination, *either directly by the language of the claim or by such a reference to the descriptive part of the specification as carries such element into the claim*, he makes such element material to the combination, and the court cannot declare it to be immaterial. It is his province to make his own claim and his privilege to restrict it."

Fay *vs.* Cordesman, 109 U. S., 408, 420.

Even if the toe or stud at the radial end of the retractor arm in the Dashiell mechanism, which projects upward into the vertical groove and binds the retractor arm to the breech block, be regarded as the equivalent of the horizontal slideway which makes the connection between the radial end of the retractor arm and the breech block in the Seabury device, still Dashiell would not be an infringer, even if he had used all of the other six elements of the Seabury claim 1 (which

he has not done), for the Supreme Court has said in passing upon an identical case:

> "Eames had a right to use any of the parts of Godfrey's combination, if he did not use the whole; and if he used all the parts but one, and for that substituted another mechanical structure *substantially different in its construction and operation but serving the same purpose*, he was not guilty of an infringement."
>
> Eames *vs.* Godfrey, 1 Wallace, 78, 80.

FOURTH.—THE SLIDING CONNECTION BETWEEN SAID ARM AND RING.

This, of course, is entirely absent from the Dashiell mechanism, and everything just said as to the failure of the charge of infringement because of the omission of the ring is equally applicable to the omission of this sliding connection with the ring.

Recapitulating, therefore, as to the "retractor," Seabury expressly defines it as consisting of four elements. Dashiell entirely discards two of these elements, and does not even replace them with mechanical equivalents. The other two elements, the lever and the hinge, which are both old, *do* appear in the Dashiell device, but the first differs from Seabury's in (1) form, (2) construction, (3) union with other portions of the mechanism, and (4) number of parts; while the second, the hinge, differs from Seabury's in (1) location, (2) form and (3) function.

Considering the retractors alone, we find that Seabury's retractor consists of (1) the ring G^1, (2) and (3) the slides g^4 g^4, (4) and (5) the two pins, (6) and (7) the two nuts, (8) and (9) the two arms G G, (10) the sleeve g, (11) the pin g^1, (12) the nut, (13) the stirrup, (14) the bolt in stirrup, and (15) the spring g^{11}. In all *fifteen* parts.

The Dashiell retractor consists of the bell-crank lever and its hinge pin—*two* parts.

POINT IV.

Not only are some of the elements in the Seabury combination lacking in that of Dashiell, but even those elements which, separately considered, seem to be similar to Seabury's, do, as a matter of fact, perform functions different from those performed by the corresponding elements of the Seabury combination. Therefore, there is no infringement.

As was said in Blake *vs.* Rawson, 3 Federal Cases, p. 598:

> "To prove that two combinations of elements are equivalent, it is not always enough to show that each element of the combination in one may be regarded, under some circumstances, as the equivalent of the corresponding element in the other, when the elements are separately considered. If the mechanical combinations of the members of the two machines be such that the action and mode of operation differ in the two machines, then one is something more than a mere mechanical equivalent for the other.
>
> "Although Hamilton's stone crusher is a combination of certain elements, which, separately considered, do not materially differ from the elements of the comnation described in the Blake patent, yet it neither embodies the arrangement nor mode of operation of the Blake machine, but operates upon a different principle, and is not an anticipation."

So, in Machine Company *vs.* Murphy, 97 U. S., 120, it was said that—

> "The correct rule is that in determining the question of infringement the court or jury, as the case may be, are not to judge about similarities or differences by the name of things, but are to look at the machines or their several devices or elements *in the light of what they do or what office or function they perform, and how they per-*

form it, and to find that one thing is substantially the same as another if it performs substantially the same function in substantially the same way to obtain the same result; always bearing in mind that devices in a patented machine are different in the sense of the patent law *when they perform different functions, or in a different way,* or produce a substantially different result."

Again—

"To constitute identity of invention, and therefore infringement, not only must the result attained be the same, but in case the means used for its attainment is a combination of known elements, the elements combined in both cases must be the same, and combined in the same way, so that each element shall perform the same function, provided, however, that the differences alleged are not merely colorable according to the rule forbidding the use of known equivalents."

Electric Signal Co. *vs.* Hall Signal Co., 114 U. S., 87 (96).

Having in view the doctrine laid down in these cases, let us examine the elements of the two combinations and determine what functions they perform.

Speaking generally, the difference between the functions performed by the Seabury and Dashiell elements respectively may be stated thus:

Seabury's device operates substantially as an *aggregation* of different machines performing their functions separately and successively, each machine being idle while any other machine is at work; the Dashiell mechanism operates as a *combination* of machines, all of which work together, and all of which work when any *one* works (the hand lever, bell-crank lever, rack bar and breech plug are so arranged that they are all most intimately connected, not with one movement of the plug only, but with all three, and there is *no time* in *any* movement of the plug that a single one of the parts

named is not performing an indispensable part in that movement. At *no* time is any part named inoperative or idle. This may easily be shown by removing each part separately from the model and attempting to work it).

Most of the elements of the two combinations are admittedly old. It is only about the lever or retractor arm that any contention is made. It has already been shown that the Dashiell arm differs from the Seabury arm in (1) form or principle of operation, (2) construction, and (3) method of union to other parts. It will now be shown that the two arms differ materially in the functions they respectively perform.

To illustrate this point more clearly, let us suppose—

First.—Two guns, one fitted with Dashiell's, the other with Seabury's mechanism, both plugs locked. *First.*—Remove the retractor arm from Seabury's mechanism and operate the lever. The plug will be unlocked. Remove the Dashiell retractor arm, and the lever swings without producing any motion in any other part. (In other words, in the first one of the three movements so frequently mentioned the Dashiell arm performs an essential function, while the Seabury arm is idle and useless. So that, for this part of the operation, the two arms are unlike in their functions.)

Second.—Suppose the two guns fitted with the two mechanisms respectively, the breech plugs withdrawn and resting on the trays, and the motion of swinging aside ready to begin. Now remove the retractor arm from both mechanisms and continue the motion of the two levers respectively. In the case of the Seabury mechanism the projection on the spindle coming to the place where the retractor ought to be, and would not be, would continue to revolve with the spindle, and no motion of any sort would take place.

In the case of the Dashiell mechanism, the pin 17 would be at the right-hand end of the slot 18 in the tray continuing to move the lever (which would then be in the position shown in Fig. 4 of the patent specifications), the tray and breech block would revolve about 9 as a centre, and would properly swing to one side (so that, in the third of the three essential movements, the arms do not perform the same function).

THIRD.—Now consider both breech plugs open and swung aside and the retractor arms removed as before; if we start the return motion of the Seabury lever, the stirrup being absent, the lever simply goes back to its closed position without causing any motion of any other part. In the case of the Dashiell mechanism, the motion of the lever would bring the pin 17 back to the inner end of the slot 18, and the motion of the tray would then commence, and the block would be returned until the tray was in its locked position. (So that in the first of the reverse or returning movements the functions performed by the two levers are not the same.)

Thus, in three of the six essential motions the Dashiell arm performs functions differing from those performed by the Seabury arm, and even if "when the elements are separately considered" the Dashiell arm should be considered

> "As the equivalent of the corresponding element in the other, yet as the mechanical combinations of the members of the two machines are such that the action and mode of operation differ in the two machines, the one is something more than a mere mechanical equivalent for the other."
>
> Blake *vs.* Rawson, *supra.*

In the Dashiell device the bell-crank lever, from its construction, forms the fulcrum and support for the pull of the

operating lever in unlocking the plug. As the plug unlocks and moves to the rear through the fraction of the pitch of the screw, the pull to the rear at the point 17, *while unlocking*, assists this rearward movement, relieving friction of screw threads of the plug in the gun. So the bell-crank lever, in unlocking the plug or locking it, not only supports the pivot of the actuating lever, but actually draws back the plug or pushes it in, respectively, the small amount of advance of screw thread necessary to relieve friction ; and it is *not still*, as Complainants allege, but can be seen to move slightly at this time. As soon as the plug is unlocked, the construction is such that the actuating lever and bell crank swing together on a centre at 21. This movement withdraws the plug, or in reverse movement, enters it in the breech. When the plug is on the tray, the bell-crank lever, through its connections to the tray and actuating lever, causes the tray or carrier to swing clear of the breech or returns it to the breech, the rack bar meanwhile locking the plug and cogged segment 16 together against any slipping.

The said lever is bolted to the tray as described to cause it to slide true over its upper surface while withdrawing the plug and to keep it from rising or drooping while the plug is being rotated. It is a retractor of lever form, of a different form, construction and operation from the lever retractors of Sauvee, Nordenfeldt and Seabury. It is not hinged to the breech by any vertical shaft as in the two latter, nor has it the construction of either. While one of its functions is to remove the breech plug from the gun or push it therein, it has also other functions just as important in contributing towards the rotating of that plug and swinging it away from the breech. The retractors of Sauvee, Nordenfeldt and Seabury perform the last function, but are idle during the rotating of the breech plug and perform no part whatever in it.

POINT V.

The Dashiell device is an improvement not upon the Seabury device, but upon the Sauvee, which is older than the Seabury.

In the Dashiell device the carrier is hinged to the breech of the gun; a frame shaped as a bell-crank lever has a pivotal connection upon the carrier and has a sliding connection with the breech block. A pin secured in this frame passes down through a lever and through a slot in the carrier. The lever has a handle projecting in one direction and a toothed segment in the other. This toothed segment engages a toothed rack which in turn engages teeth upon the breech block. A movement of about 90° of the lever causes it to turn in the frame or bell-crank lever and by means of the rack, to turn the breech block the necessary distance to unlock it. Further movement of the lever causes the pin to travel in the slot in the carrier and at the same time the frame or bell-crank lever and the breech block move with the lever. As soon as the pin reaches the extreme end of the slot continued movement of the lever causes the carrier to swing on its pivot and the entire mechanism moves the breech block to one side, the handle of the lever having made a traverse of about 180°.

This description fits the Sauvee device exactly. On turning to the Sauvee patent No. 9453, July 4, 1887, there is shown a breech block, having at the rear the piece, *b*, which, for the purpose of carrying the pin, *c*, is the equivalent of the frame or bell-crank lever of the Dashiell device. The operative lever, *d*, is secured to the pin, *c*. Instead of the toothed segment being at the small end of the lever it is secured to the pin. That is, in the Sauvee device the lever and toothed segment and pin are in three parts instead of two. The carrier of the Sauvee device, as in the Dashiell

device, is the only part of the mechanism which is hinged to the breech. The other parts are secured to the carrier. In the Sauvee device when the lever, *d*, is moved about 90° the breech block is unlocked through the pin, *c*, and the gear, *e*, the same as in the Dashiell device. Further movement causes the pin, *c*, to travel along the slot, just as the pin, 17, travels along the slot, 18, in the Dashiell device. This movement of the lever, *d*, and the pivot, *c*, causes the piece or frame, *b*, to withdraw the breech block from the breech just as in the Dashiell device it is done by the frame or bell-crank lever, 20. As soon as the pivot, *c*, has reached the end of the slot and the breech block is entirely withdrawn from the breech, the continued movement of the lever, *d*, causes the carrier, with the breech block to be moved to one side, the lever making a traverse of about 180° as in the Dashiell device.

As shown in this patent, there is found precisely the same hinging of the retractor to the carrier as is found in the Dashiell device. It is true that in the Sauvee device the lever is not permanently hinged; it has a sliding pivot. But in the Sauvee device, as in the Dashiell device, the retractor is hinged to the carrier. The retractor is just as much hinged to the breech as is the Dashiell retractor.

Everything that is in the Sauvee device is found in the Dashiell device except that there are some modified details of construction which render the Dashiell device easier of operation.

It is obvious, therefore, that if claim 1 of the Seabury patent is to be construed so as to cover the Dashiell device, it is fully anticipated by the Sauvee patent under the well-known doctrine that if what comes after infringes, going before it anticipates.

POINT VI.

Considering the case in its bare legal aspects, stipped of conflicting questions of fact, it clearly appears that there is no infringement.

We have now considered the mechanism described in the Seabury Claim 1, in what we may call its "construction" aspect, and have, we believe, shown that this claim is not infringed by Dashiell.

Let us now consider the same claim from a purely legal standpoint, unaffected by matters of detail, or questions of fact or construction, and it will appear, beyond peradventure or chance for dispute, that upon the doctrine repeatedly and definitely laid down by the Supreme Court of the United States, Dashiell is free from any charge of infringing Seabury's Claim 1.

That claim, as we have already said (see page 11 of this brief; also the Seabury specifications, and page 24 of Complainants' brief in the Circuit Court), embraces the following elements:

1. A breech-loading cannon;

2. A breech block for the same;

3. A breech-block carrier; and

4. A breech-block retractor.

But Seabury has twice in his patent (first, at line 88, p. 2; and second, at line 45, p. 4), defined the word "retractor" as being a device composed of four distinct elements. Under the doctrine of 15 How., 336; 1 Wall., 491, and 13 F. R., 903; 109 U. S., 408 (420), and numerous

other cases, "the patent claim must be construed in the light of the specifications," and we may therefore substitute, instead of the word "retractor," the elements specifically claimed as composing it; we thus find that Seabury's Claim 1 is for the following combination of elements, viz.:

1. A breech-loading cannon;

2. A breech block for the same;

3. A breech-block carrier;

4. An arm;

5. A hinge by which said arm is connected with the breech of the gun;

6. A ring screwed into the breech block; and

7. A sliding connection between said arm and ring.

Now, on the face of the Dashiell specifications, it specifically appears, so as to leave no room for contention, that elements 6 and 7 are not present in the Dashiell device. Element 6 has been very ingeniously discarded without being replaced by any other element, part or equivalent.

As to element Number 7, since there is no ring there can be no sliding connection with a ring. There is a sliding connection with the breech block, but, as has already been shown under the heading (*bc*), Union of the Radial Ends of the Arms to the Breech Block, page 60 of this brief.

It is clear, therefore, that Seabury's Claim 1 is for a combination which embraces seven elements, and that Dashiell's device employs only five of these elements.

> "Our law requires the patentee to specify particularly what he claims to be new, and if he claims a combina-

tion of certain elements or parts, we cannot declare that any one of these elements is immaterial. The patentee makes them all material by the restricted form of his claim."

Water Meter Co. *vs.* Desper, 101 U. S., 332 (337).

"It is so well settled that it hardly requires authorities at this time, that the omission of one ingredient of a combination covered by any claim of a patent averts any charge of infringement based on that claim."

Walker on Patents, Sec. 349.

In Ott *vs.* Barth., 32 F. R., 89, the Court said:

"It is true, as already stated, that the end pieces of the defendant's lounge perform the same office with reference to these folding-rods that is performed by the complainant's head-board; but the complainant has seen fit to make these head-boards elements of his patent. He has brought them into his combination as essential parts of it; and the defendant has merely left out these head-boards, and constructed his bed, by pivoting these folding-rods upon the sides of the frames of the sections, dropping them slightly lower down than the complainant's construction shows, and resting them upon the end pieces of his frame. In other words, he has wholly dispensed with the head-boards shown in the complainant's patent. He has not substituted what is an equivalent for the head-boards in the complainant's combination, but has dispensed wholly with the head-board, and has used the end pieces, which are not only in the complainant's lounge, but probably all other lounges, as the fulcrum on which his folding-rods rests; so that the defendant cannot be said, it seems to me, to use the combination covered by this second claim, because he does not use the head-boards, but accomplishes the same result without their use. He throws the head-boards of complainant's patent away, and uses the portions of the structure which are left, without substituting anything in the

place of the head-board which he has rejected. * * * The defendant omits one of the elements of the complainant's combination, and substitutes nothing for it, only using what he found in the complainant's lounge, and in other lounges with these head-boards left out. It seems to me, therefore, the end pieces of these lounge frames are not to be considered as the equivalent of the head-boards in this claim of complainant's patent. Complainant saw fit to make these head-boards an element in his combination. They were in his lounge for other purposes, and he saw fit to appropriate them to the purpose of these folding-rods, and has a patent upon that in combination with the other parts of this lounge; and, having elected to make these head-boards an element in his combination, he can only claim an infringement when the head-board, or some colorable substitute for them is used."

In Rowell *vs.* Lindsay, 113 U. S., 97 (102), the Supreme Court said:

"The patent being for a combination, there can be no infringement unless the combination is infringed. In Prouty *vs.* Ruggles, 16 Pet., 336, 341, it was said: 'This combination, composed of all the parts mentioned in the specification, and arranged with reference to each other, and to other parts of the plough in the manner therein described, is stated to be the improvement, and is the thing patented. The use of any two of these parts only, or of two combined with a third, which is substantially different in form or in the manner of its arrangement and connection with the others, is, therefore, not the thing patented. It is not the same combination if it substantially differs from it in any of its parts. The jogging of the standard into the beam, and its extension backwards from the bolt, are both treated by the plaintiffs as essential parts of their combination for the purpose of brace and draft. Consequently, the use of either alone, by the defendants, would not be the same improvement nor infringe the patent of the plaintiffs.' To the same effect see also Stimpson *vs.*

Baltimore & Susquehanna Railroad Co., 10 How., 329; Eames *vs.* Godfrey, 1 Wall., 78; Seymour *vs.* Osborne, 11 Wall., 516; Dunbar *vs.* Myers, 94 U. S., 187; Fuller *vs.* Yentzer, 94 U. S., 288."

"To constitute identity of invention, and therefore infringement, not only must the result attained be the same, but in case the means used for its attainment is a combination of known elements, the elements combined in both cases must be the same, and combined in the same way."

Electric Signal Co., *vs.* Hall Signal Co., 114 U. S., 87 (96).

"Where a defendant in constructing his machine omits entirely one of the ingredients of the combination without substituting another, he does not infringe."

Gould *vs.* Rees, 15 Wallace, 187.

In the case of Fay *vs.* Cordesman, 109 U. S., 408 (420), the Supreme Court, passing upon a question identical with this, namely, the limitation to be placed on the claim where the elements were not all specifically named in the claim, so that reference had to be had to the specifications, said:

"The claims of the patents sued on in this case are claims for combinations. In such a claim, if the patentee specifies any element as entering into the combination, *either directly by the language of the claim, or by such a reference to the descriptive part of the specification as carries such element into the claim,* he makes such element material to the combination, and the Court cannot declare it to be immaterial. It is his province to make his own claim, and his privilege to restrict it."

Dashiell having omitted at least two of Seabury's essential elements does not infringe.

The fact of the matter is that Complainants and Complainants' counsel understand now that there is no infringement, though we do not doubt that they went into the case

believing that Dashiell had infringed, and doubtless believing also that he had fraudulently infringed, through collusion with his chief, for we cannot understand how counsel would make such unnecessary, slanderous and false accusations without believing them to be true.

And we think that it appears in this case that the facts are substantially these:

Mr. Seabury is an officer of considerable inventive talent, but one who has not been a wide reader of current scientific and service publications; one who has not much consulted with his brother officers; one who has, as his testimony shows, been rather a quiet, thoughtful student than a pratical mechanician; one who has, as he says, thought out inventions in his brain and kept them there in an incomplete state for years and years while the rest of the world working along the same lines had not only devised, but actually produced somewhat similar devices which, in the process of time and through the evolutionary course of practice and operation had developed into something fitter than Mr. Seabury's conception. Years ago, while Mr. Seabury was at the Naval Academy, and later while he was in active service in the navy, the advantage and desirability of some mechanism which would accomplish the three motions in one was necessarily a matter of interest to and discussion among naval officers, and Mr. Seabury naturally set himself to work to solve this problem. But he was not interested in the problems of gunnery alone. He was devising and patenting devices for use in many different fields, but finally, at some time, he reached a mental conception of a device which would, he thought, perform the three motions in one, and he applied for and obtained a patent upon this device. When his application went in he was still more the student than the practical man, and was, we believe, unacquainted with the state of the art. Inventors other than Seabury, in

this country as well as the larger foreign field, had been at work on the problem which had employed Seabury; and Nordenfeldt, Farcot, Canet and Sauvee had all perfected and put in working operation devices which accomplished the three motions in one. We take it for granted that Mr. Seabury did not know of these, as otherwise he could not have claimed in his specification that these three motions had hitherto been performed separately by hand, and that his object was to produce the first machine which should accomplish them, first by mechanical power and second by the continuous operation of a single lever. We think, therefore, that Mr. Seabury believed this statement when he made it, and that he was unacquainted with the state of the art; that he then presented his device to the Complainants, the principal one of whom was himself an ex-officer who had served during the war, when breech-loading ordnance was in its infancy, and who, not being so far advanced in breech mechanism as Mr. Seabury himself, accepted the statement made in the specifications as to the state of the art, and invested in the patent.

Meantime Dashiell was at work in the same field. He was a much younger man than Seabury, had received his education at the Naval Academy when breech-loading ordnance was much further advanced than in Seabury's school-days, had been on ordnance duty almost continually since his graduation, and had tested and tried inventions submitted by other persons submitted to the Navy Department for trial. He was a man of mechanical as well as of inventive ability, and, standing at the very head of the younger officers of the Ordnance Department of the Navy, was a formidable rival to Seabury's inventive aspirations.

Dashiell, unlike Seabury, believed it his duty to keep abreast of the times in ordnance matters, not only by practically working such machines as were furnished to him by

the Department, but by reading patent specifications and all other matters that he could obtain descriptive of different ordnance devices. He knew of the Farcot, the Canet, the Sauvee and Nordenfeldt mechanisms as they appeared. He knew that long before Seabury's time the three motions had been reduced to one performed by the continuous operation of a single lever. When Seabury's mechanism appeared Dashiell studied the specifications, and as an officer who felt himself duty bound to know the state of the art of breech-loading arms, he made himself thoroughly acquainted with the principles of the Seabury device and with the improvements it sought to accomplish.

Now, observe that Dashiell, unlike Seabury, states plainly in his specifications that he does understand that the state of the art precludes him from claiming any novelty in the accomplishment of the three motions in one. He says:

> "The objects of my invention are, first to provide improvements in the breech mechanism of the guns whereby they can be worked, loaded and fired more rapidly than usual, the several movements of the breech plug being effected in succession by the continuous motion of a single hand lever," and "my invention consists in the peculiarities of construction and arrangement or combination of parts."

The next step chronologically was in the Patent Office, where Seabury's claims having been considered and allowed, Dashiell's were received, and he was allowed what he had asked, namely, a patent on the peculiarities of construction and arrangement or combination of the parts of his device.

The two devices were submitted to the Navy Department, and Dashiell's was accepted. It needs but a glance at the two machines to see the much greater simplicity of the Dashiell's device, and it needs but one single opening and closing of the breech block to show the greater facility of working of the Dashiell mechanism.

The Dashiell mechanism having been adopted, Seabury and the other complainants learned for the first time that there was in the field another device which performed the three motions in one, and believing the statements made in their patent specifications, and jumping rashly to the conclusion that Dashiell was an infringer, this action was begun.

So, as we have said, the patentee and his assignees, the Complainants, and the Complainants' counsel, started this action, believing that Mr. Seabury was the original discoverer of the method of accomplishing three motions in one.

Incidentally we have here mentioned the greater simplicity of the Dashiell mechanism which led to its adoption. This simplicity is shown first in the arrangement of the parts, but much more noticeably in the numbers of the parts, of the respective machines. If, as said by the Supreme Court, where one combination omits substantial parts of the ingredients of a similar but preceding combination, there is no infringement, then Dashiell is well beyond the border land of infringement, for Seabury's device is composed, as his specifications show, of fifty-five different parts, while the Dashiell device is composed of but fifteen. (This computation leaves out the firing devices, which are not essential parts of either mechanism.)

The circumstances of the adoption of the Dashiell device in the service and of the rejection of the Seabury are in themselves almost enough to justify the assertion that the Dashiell device is not an infringement upon the Seabury. First, Dashiell must be given the benefit of the doctrine of cases such as McDonald *vs.* Whitney, 24 F. R., 600, that "a patent carries with it a presumption of novelty, and the burden is upon the attacking party to rebut this presumption" (see also 22 F. R., 309; 31 F. R., 402; 38 F. R., 239, and 117 U. S., 689). Now, with

this burden upon the Complainants, consider the fact that not one of Seabury's devices has ever been adopted or used; that no service, naval or military, has ever showed the slightest inclination to approve or adopt it; and as opposed to that consider the fact that the Dashiell device has been adopted by the only service to which it has been offered, and that every gun to which the Dashiell device can possibly be fitted has that device attached to it as soon as the gun is finished; and there are to-day in operation in the United States Navy over one hundred and fifty guns to which are attached the Dashiell device. It is a well-known principle of law that the fact that a patented device goes at once into extensive use is strong evidence of its novelty, value and usefulness, or, as was said in Hill *vs.* Biddle, 27 F. R., 560:

> "The utility of a machine as shown by the general public demand for it, while not conclusive, is highly persuasive evidence of novelty and invention, and in the absence of pretty conclusive evidence to the contrary, will generally exercise a controlling influence."

Even in the case of an ordinary machine for performing some of the trival affairs of everyday life, the court would apply this principle of law, and surely it is much more important that it should apply it in this case, where, if it be held that the Dashiell device is an infringement of the Seabury, the use of the former device will be prohibited by the department, and the result may be that when service is required of a breech mechanism in defense of the country, our officers and sailors will have become accustomed to the handling of an inferior device, while our guns will be fitted with that device which cannot be speedily changed. And so a decision in this matter against the Defendant might at a critical time seriously hamper the defense of the country.

Surely great attention should be paid to the actions and opinions of the ordnance officers educated and paid by the Government for just such duties as these, in order that the country may be prepared in time of need, and who, in performance of those duties and after comparing the Seabury and Dashiell mechanisms, have adopted the latter for use in the naval service.

W. H. SINGLETON,
Of Counsel for Appellant.